This is a digital copy of a book that was preserved for generations on library shelves before it was carefully scanned by Google as part of a project to make the world's books discoverable online.

It has survived long enough for the copyright to expire and the book to enter the public domain. A public domain book is one that was never subject to copyright or whose legal copyright term has expired. Whether a book is in the public domain may vary country to country. Public domain books are our gateways to the past, representing a wealth of history, culture and knowledge that's often difficult to discover.

Marks, notations and other marginalia present in the original volume will appear in this file - a reminder of this book's long journey from the publisher to a library and finally to you.

**Usage guidelines**

Google is proud to partner with libraries to digitize public domain materials and make them widely accessible. Public domain books belong to the public and we are merely their custodians. Nevertheless, this work is expensive, so in order to keep providing this resource, we have taken steps to prevent abuse by commercial parties, including placing technical restrictions on automated querying.

We also ask that you:

+ *Make non-commercial use of the files* We designed Google Book Search for use by individuals, and we request that you use these files for personal, non-commercial purposes.
+ *Refrain from automated querying* Do not send automated queries of any sort to Google's system: If you are conducting research on machine translation, optical character recognition or other areas where access to a large amount of text is helpful, please contact us. We encourage the use of public domain materials for these purposes and may be able to help.
+ *Maintain attribution* The Google "watermark" you see on each file is essential for informing people about this project and helping them find additional materials through Google Book Search. Please do not remove it.
+ *Keep it legal* Whatever your use, remember that you are responsible for ensuring that what you are doing is legal. Do not assume that just because we believe a book is in the public domain for users in the United States, that the work is also in the public domain for users in other countries. Whether a book is still in copyright varies from country to country, and we can't offer guidance on whether any specific use of any specific book is allowed. Please do not assume that a book's appearance in Google Book Search means it can be used in any manner anywhere in the world. Copyright infringement liability can be quite severe.

**About Google Book Search**

Google's mission is to organize the world's information and to make it universally accessible and useful. Google Book Search helps readers discover the world's books while helping authors and publishers reach new audiences. You can search through the full text of this book on the web at `http://books.google.com/`

PA 6615.3B1

TRANSFERRED TO
FINE ARTS LIBRARY

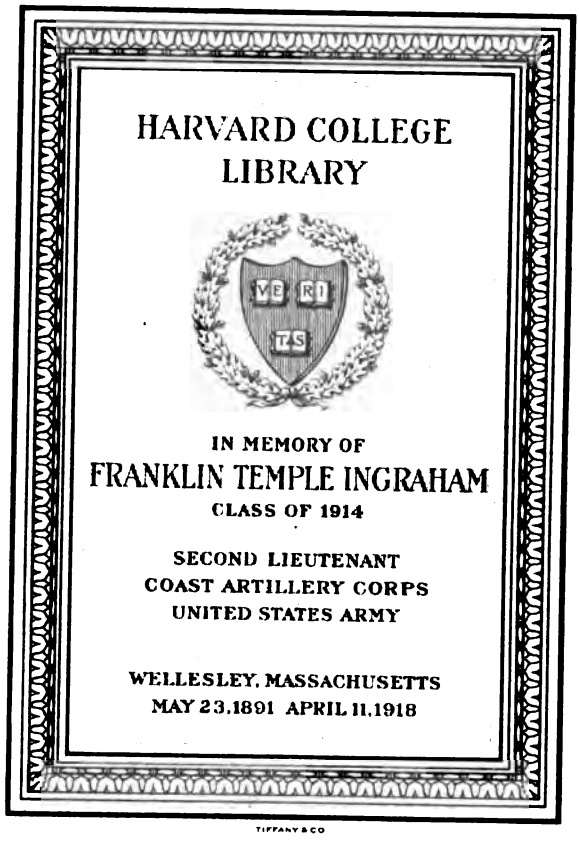

# WILSON'S

770
W698
v. 8

# PHOTOGRAPHIC MAGAZINE

FOUNDED IN 1864 BY EDWARD L. WILSON

L. WINIFRED WILSON } Editors
T. DIXON TENNANT }

MRS. EDWARD L. WILSON, Proprietor

## VOLUME XLVIII

NEW YORK
EDWARD L. WILSON, PUBLISHER
122 EAST 25th STREET
1911

Δ
~~FA 6615.389~~
FA 16.100
HARVARD FINE ARTS LIBRARY
FOGG MUSEUM
HARVARD COLLEGE
LIBRARY

WILLIAM J. DORNAN, PRINTER
RITTENHOUSE BUILDING, 701-709 ARCH STREET
PHILADELPHIA, PA.

# EMBELLISHMENTS

*January.*—Frontispiece and one engraved supplement. By D. O. HILL. Engraved supplements from photographs by E. J. STEICHEN, New York; F. EUGENE, New York; ROBERT DEMACHY, Paris; GEORGE H. SEELEY, Stockbridge, Mass.; J. CRAIG ANNAN, Glasgow, Scotland; PAUL B. HAVILAND, New York; ARNOLD GENTHE, San Franscisco.

*February.*—Frontispiece. By B. J. FALK, New York. Engraved supplements from photographs by WILLIAM GILL, Colchester, England; E. G. DUNNING, New York; C. F. TOWNSEND, Des Moines, Iowa; HOWARD D. BEACH, Buffalo, N. Y.; NEW PHOTOGRAPHIC STUDIO, Berlin.

*March.*—Frontispiece and five engraved supplements from photographs by CHARLES L. PECK, Buffalo, N. Y.

*April.*—Frontispiece and two engraved supplements from photographs by S. H. LIFSHEY. Engraved supplements from photographs by L. T. POWELL, San Antonio, Texas.

*May.*—Frontispiece engraved from a photograph by the NEW PHOTOGRAPHIC CO., Berlin.

*June.*—Frontispiece engraved from a steel engraving by JOHN SARTAIN, Philadelphia, Pa.

*July.*—Frontispiece and five engraved supplements from photographs by RUEGGE, Milwaukee, Wis.

*August.*—Frontispiece and engraved supplements from photographs by THE ELLIOTTS, Austin, Texas.

*September.*—Engraved photographs of Officers of Photographers' Association of America.

*October.*—Frontispiece and seven engraved supplements from photographs by HOWARD D. BEACH, Buffalo, N. Y. Engraved supplement from photograph by RUDOLPH DÜHRKOOP, Hamburg.

*November.*—Frontispiece and five engraved supplements from photographs by ERNEST GALL, Adelaide, South Australia.

*December.*—Frontispiece and five engraved supplements from photographs by GEORGE STECKEL, Los Angeles, Cal.

Engraver's Fund

# LIST OF ILLUSTRATORS


ANNAN, J. CRAIG.—January

BEACH, HOWARD D.—February, October.

DEMACHY, ROBERT.—January
Dührkoop, Rudolph.—October
Dunning, E. G.—February

ELLIOTTS, THE.—August
Eugene, F.—January

FALK, B. J.—February

GALL, ERNEST.—November
Genthe, Arnold.—January
Gill, William.—February

HAVILAND, PAUL B.—January
Hill, D. O.—January

LIFSHEY, S. H.—April

NEW PHOTOGRAPHIC CO.—February, May

PECK, CHARLES L.—March
Powell, L. T.—April

RUEGGE.—July

SARTAIN, JOHN.—June
Seeley, George H.—January
Steckel, George.—December
Steichen, E. J.—January

TOWNSEND, C. F.—February


62794

62794

# INDEX


A WORD upon posing, 300
Adaptation in photography, 63
Advertising and business, 482
copy, to prepare, 252
few remarks upon, 130
Allan, Sidney, 73, 169, 265, 313, 361, 457, 505
American Photographer and Copyright, the, 481
Arrangement, composition and, 62
Artistic side of photography, theory and practice, 380
Australian photographer-engraver, an, 507

BACKED plates, question of, 349
Backgrounds, working in, 352
Baker, Harold, 315
Banishment of pinholes, 57
Beach, Howard D., 457
Belle-Oudry, E., 223, 250, 251
Black and white, reproduction of, 255
Blocks for engravers, photographing on wood, 58
Books received, 285
Brady, the civil war photographer, 134
Braham, A. C., 559
British copyright registration, 510
professionals, current methods among, 197
Bromide manipulation, practical, 273
paper, printing on, 373
potassium, action of, 224
printing, 153, 201
Burkholder, J. H., 106, 254
Business and advertising, 482
starting in, 364

CARBON printing, 559
on painted canvas, 319
on wood panels, 320
transparencies, 79
Centenary of Dr. John Wm. Draper, 246
Chicago Art Institute, a visit to, 121
Cinematography, possibilities in, 124
Civil War photographer, Brady, 134
Collotype, color portraiture by, 123
Color contrasts, the removing of, 328
photography on paper, 532
plates for, 270
the future of, 76
portraiture by collotype, 123
screen, the choice of, 540
Commercial side, the, 107
Composition and arrangement, 62
Concerning reciprocity, 97
Congress of Photography, 293, 423, 465, 491
Contact printing on bromide paper, 373
Contrast increasing, 224
Convenient and compact drying rack, 509
copying stand, 340
Convention of United Kingdom, Photographic, 342
Cooke lens, the home of, 267
Coover, L. G., 102
Copying stand, convenient, 340
Copyright and the American photographer, 481
British registration, 510
Crooke, of Edinburgh, 363
Current methods among British professionals, 194
Curtis, E. J., 510

DEAD black varnish, 511
Demachy, Robert, 487
Developer, a universal, 254
Development tank, 459
Diffusion, 126
Discretion, 370
Dollars the photographer passes by, 106
Draper, John William, centenary of, 246
Dürer, Albrecht, 265

EDITORS' table, 48, 96, 144, 192, 240, 288, 336, 384, 432, 480, 528, 576
England, professional photography in, 530
Enlargements, how to make, 172
Ethelbert, H. W., 373
Exposure tips, 478
Expression in portraiture, 323
Extra profit, 102

FIRST portrait photographer, 246
Fixed, when is a plate, 81
Focal plane shutters, points about, 321

GET it in the print, 538
Glass and porcelain, photographic decorations of, 298
Goerz, C. P., 20th anniversary, 565
Good medicine, 137
Gravier, Charles, 270
Greuze, Jean Baptiste, 313
Ground glass screen, making a, 142
Guest, Anthony, 54

HANDY, F. C., 368
Hartmann, Sadakichi, 121, 553
Hodges, John A., 172
Home of the Cooke lens, 267
How to avoid stained fingers, 199
to make enlargements, 172

IMMENSITY by the camera, on picturing, 54
Income, unfailing source of, 193
Indiana Association of Photographers, 236
Convention, 245, 296
Influence of the old masters, 91
Isochromatic work in the studio, 483

KING, PERCY, 218
Kitto, Thomas, 567
Kodak advertising contest, 1911, 188, 544
Kodak Co., headquarters, 563

LAW for photographers, questions of, 368
Lens in the studio, 326
the use of half the, 331
Lenses, shortening the focus of, 150
Lesson in lighting, 218
Lettering negatives, 141
Light and shade as applied to photography, 440
Lighting, a lesson in, 218
Lightning, hints on photography of, 320
Lights, printing, 462
Looking pleasant, 334

MACHINERY in position, photographing, 129
Manufacturers and dealers at Bridgeport, 438
Masters, influence of the old, 91
in portraiture, 73, 169, 265, 313, 361, 505
Medicine, good, 137
Methods and formulæ, 352
Metric weights and measures, 537
Mummery, Horace, 85

NATIONAL Convention, full program of, 242
news of, 146
Negatives, lettering, 141
New books, 93, 476, 574
England Convention, 433
ideas in portrait photography, 457
York, Professional Photographers' Society of, 53
News and notes, 92
of the National Convention, 231
Night, outdoor photography at, 366

OIL transfer process, 487
Old masters, influence of the, 91
people, photographing, 186
O'Neill, Bryan P., 509
Opportunities, spring, 152
Outdoor photography at night, 366

PAPER, care in manufacture of platinum, 325
Penlake, Richard, 349, 483
Pennsylvania Convention, 181
Permanence of photographic prints, 446
Perspective in photography, 278
Photograph, the window, 75
Photographer, Brady, the Civil War, 134
first portrait, 246
in a small town, 553
Photographers' Association of America, 50, 146, 148, 231, 242, 289, 337, 385
of Indiana, 236, 245
of New England, 294, 338
vacation school for, 241
Photographic Convention of United Kingdom, 342
decoration of glass and porcelain, 298
Photographing machinery in position, 129
old people, 186
on wood blocks for engravers, 58
polished surfaces, 140
Photographs, correct distance from which to look at, 278
rack for drying mounted, 509
Photography, adaptation in, 63
at night, outdoor, 366
in England, professional, 530
perspective in, 278
plates for color, 270
press, 567
the future of color, 76
Picturing immensity by the camera, 54
Pinholes, the banishment of, 57
Plates for color photography, 270
Platinum paper, care in manufacture of, 325
print, the, 538
Points about focal plane shutters, 321
Polished surfaces, photographing, 140
Porcelain and glass, photographic decoration of, 298
Portraiture, 315
by collotype, color, 123
expression in, 323
masters in 73, 169, 265, 313, 361, 505
tone values in, 561
Portrait photography, some new ideas in, 457
Posing, a word upon, 300
Positions and proofs, 171
Possibilities in cinematography, 124
Postal discrimination, 83
Potassium bromide in developers, 224
Practical bromide manipulation, 273
Preparation of painted canvas for carbon printing, 319
Press photography, 567
Principles and methods of geometrical optics, 93
Print, the platinum, 538
Printing, bromide, 153
carbon, 559
on bromide paper, contact, 373
preparation of canvas for carbon, 319
lights, 462
Prints, permanence of photographic, 446
Prize winners, kodak competition, 544
Professional Photographers' Club of New York, 574

Professional Photographers' Society of New York, 53, 98
Metropolitan Section, 334
photography in England, 530
Process, oil transfer, 487
Profit, extra, 102
Progress medal of the Royal Photographic Society, 529
Proofs and positions, 171
showing, 223

QUESTION of backed plates, 349
Questions of law for photographers, 368

RACK for drying photographs, 509
Remarks upon advertising, 130
Rembrandt, 505
Rendering of color contrasts, 328
Reproduction of black and white, 255
Retouching media, 348
Reversal, the cause of, and its remedy, 555
Reynolds, Joshua, 73
Rockwood, George G., 91, 382
Running water, washing in, 139

SALESWOMAN, the, 251
Salesmanship, 250
Salmon, P. R., 57, 150
Scottish photographer in America, 226
Screen, choice of a color, 540
Sepia sense, 330
Shortening the focus of lenses, 150
Showing proofs, 223
Shutters, points about focal plane, 321
Signs along Broadway, 229
Sixty days before Easter, 49
Smedley, F. S., 352
Smith, L. H., 107
St. Paul Convention, 337, 385, 465, 491
Southall, James P. C., 93
Spring opportunities, 152
Stain removers, 142
Stained fingers, how to avoid, 199
Starting in business, 364
Studio, the lens in the, 326
work, lenses for, 150
Swoyer, A. E., 340, 462

TANK development, 459
Taylor, Charles Stillman, 300
The cause of reversal and its remedy, 555
The coming national, 145
Third Congress of Photography, 465, 491
To prepare advertising copy, 252
Tone values in portraiture, 561
Towles, C. O., 63
Trade notes, 47, 95, 143, 190, 238, 286, 335, 383, 431, 479, 527, 575
Transparencies, carbon, 79

UNFAILING source of income, 193
United Kingdom, Photographic Convention of, 342
Universal dark-room developer, 254
Use of half the lens, 331
Utocolor, 532

VACATION school for photographers, 241
Values in portraiture, tone, 561
Van Dyck, Anton, 169
Varnish, dead black, 511
Velasquez, 361

WASHING, 139
Way we look at things, 85
Weight and measures, metric, 537
When is a plate fixed, 81
Why a congress, 244
Williams, Alyn, 440
Window photograph, the, 75
Wood blocks for engravers, photographing on, 58
panels, carbon printing on, 320
Working in backgrounds, 352

By D. O. Hill (1802-1870)

*International Exhibition, Buffalo, N. Y.*

With permission Photo-Secession

# WILSON'S

# PHOTOGRAPHIC MAGAZINE

FOUNDED IN 1864 BY EDWARD L. WILSON

VOL. XLVIII JANUARY, 1911 No. 649

## BUSINESS METHODS IN PHOTOGRAPHY.

PHOTOGRAPHY suffers from its dual nature. It is sometimes, in the minds of its practitioners, an art, and the photographer is an artist. Was not the low collar and the flowing black necktie adopted as the hallmark of the photographic artist?

Whether the photographer is an artist or not, he must all the time be a business man. It does not follow that a great artist is a great business man. The reverse is more often the case. Sir Henry Irving during the greater part of his career had a worldwide popularity, which gave him unusual opportunities to amass wealth, yet died a comparatively poor man. His artistic successes were sometimes commercial or business failures.

A photographer may make a name for himself under the skylight and still be unable to properly support his family.

In photography the business end must be developed with the artistic, and *vice versa*, and the photographer must enlarge and improve his business methods as he improves his work under the light.

Too few photographers appreciate the importance of the reception room and the receptionist. The reception room is going to impress your customer either favorably or unfavorably. Mark the new year by looking over your reception room and see if you cannot make it look brighter and more attractive. Your receptionist is not such an easy matter, but there are surely ways and means of keying up the desire to make a better business showing in 1911 than in 1910. This is a good time to make any changes and to introduce any new ideas.

Look over your sample books and portfolios and have them renewed and put in order. See if you cannot hang up a new and better set of specimens on the walls. If the frames are in need of rerenewing or renovating, it will be a good investment to renew or renovate.

Go through the workroom and the printing department and see whether you are keeping up with the latest in apparatus and tools. Photography as a science is so recent that what was up to date yesterday is today obsolete. The manufacturers are always showing new apparatus that are, many of them, time and money savers. That there were no automatic printing machines when you

started in business is no argument against you putting one in now. Don't be afraid of taking up a new idea. An inventor, seeking to enrich himself, can only do so by inventing something of real merit. The discoverer of Velox enriched photography as well as his bank account.

While always striving to make better pictures, don't for a moment relax on the selling end. It is the vital part of your business.

## INTERNATIONAL EXHIBITION OF PICTORIAL PHOTOGRAPHY—ALBRIGHT ART GALLERY.

### The Most Comprehensive Review of the Buffalo Exhibition.

BY SADAKICHI HARTMANN.

THE International Exhibition of Pictorial Photography, under the auspices of the Photo-Secession, opened at the Albright Art Galleries, Buffalo, N. Y., on November 4. It was a much-heralded event, and in a way met all expectations. It was the most complete and comprehensive survey of pictorialism ever arranged in this country. There were about 600 prints on exhibition, of which 220 were by foreign pictorialists and 100 in the Open Section.

The entire Albright Gallery, a beautifully situated white marble building in the Ionic style, had been put at the disposal of this exhibition; four large halls and four smaller rooms. These stately, well proportioned interiors furnished as favorable a setting as was ever commanded by a photographic exhibition. Besides, unusual care was bestowed upon the way in which the prints were presented to the public. The walls were specially decorated for the occasion in dull green and grayish-blue taffeta. The larger prints were framed, the smaller ones mounted on large light mats against a background of cheesecloth. The once so popular multiple mounting was not in evidence. Nearly all the exhibits were hung in single or double rows, and in many instances an entire wall was reserved for the display of one man's work. The hanging was masterly. It was largely a matter of spacing and the balancing of light and dark prints, and the problem was solved with scientific precision by Max Weber, a young New York painter, who devoted an entire week to the task.

The exhibition claimed to be historical, but there were only the forty colotypes of David Octavius Hill to make it so. The work of Reylander, Solomon, Mrs. Cameron, Robinson, and Dr. Emerson would have furnished an interesting link between the work of the poetics and the pictorial movement which started about 1886. The prints of Hill revealed excellent pictorial qualities, a certain breadth of treatment and considerable ability in conveying natural attitudes and facial expression.

Great Britain was represented by 173 prints. Craig Annan furnished the principal attraction. His twenty-three carefully selected prints excelled in photographic qualities, although they resembled the texture of etchings in some instances. Like Stieglitz, he upholds the beauty of photographic technique; his blacks are superb, but the principal charm of his work lies in the evenness of his tonalities, a certain refinement in the handling of values. In composition Craig Annan seems to be more am-

bitious than most workers. Malcolm Arbuthnot showed seven large prints, well constructed and soft in texture, among them a curious group of three ladies serving afternoon tea. Walter Bennington displayed his suave poetic temperament in a number of soft gray tonalities without strong accents. Frank H. Reed pleased many by his unusual space arrangements and clever use of silhouette forms; while George Davison surprised many of his American admirers by his unconventional themes and mastery of atmospheric conditions. Several of his prints were a trifle spotty. Frederick H. Evans was represented as usual by well lighted architectural subjects.

The weakest section of the exhibition was the French. Only thirty-five prints, and nothing but gums and oil prints! Apparently Frank Eugene's visit to the *rue Francais Premier*, in 1902, has proved very disastrous to the development of French pictorialism. The work of Demachy, Le Begue, and Puyot showed little progress except in hand manipulation. Pierre Debrenil, one of the younger workers, apparently has great facility in adapting the themes of Japanese color prints for photographic purposes.

The Germans were strong in landscape work. "The Solitary Horseman," by the Hofmeister Bros., is a masterpiece. Also, Henneberg's "Ploughing," and Kuehn's impressionistic compositions proved more than ordinarily attractive. The Germans were represented by twenty-five prints. They still favor large colored gums of the size of paintings.

Baron A. de Meyer, whose affiliations place him in the Austrian-German section (as the catalogue had it), made an excellent showing with twenty-four large framed platinum prints. His still lifes were exquisite, while his portraits of women were noteworthy for clever spotting, the accentuation of outline against lighted planes, and a true understanding for picturesque effects.

The American Secessionists showed 220 prints, by nineteen exhibitors, of which six were women. Dyer and Day were inadequately represented. George H. Seeley, of Stockbridge, Mass., came as a complete surprise. His twenty or more large gum prints, most decorative arrangements of female figures with flowing drapery and all sorts of studio paraphernalia, made a strong impression. The division of space into large light and dark planes was excellent. Furthermore, they "carried." They yielded a sensation of agreeable shapes even at a distance of fifty feet, which is rarely met with in photographic composition.

Steichen sent little that was new except three of his exquisite moonlight interpretations of Rodin's Balzac. He also sent large prints of his well-known portraits of President Taft, Roosevelt, Pierpont Morgan, Maeterlinck, Strauss, Rodin, Lenbach, and Bernard Shaw. Steichen is still the bone of contention in the Secession as well as the photographic world at large. Whatever his shortcomings may be, his work shows superior mentality. There is something beyond a record, and the public seemed to appreciate this quality, as Steichen pictures attracted more than any others.

Stieglitz's exhibit included many of his older subjects, but there were at least eight or ten new prints of racetrack, dock and river scenes, skyscrapers and aeroplanes, which prove that the "father of pictorialism" is still able to live up to his preaching. Coburn had a big exhibit, but the selection did not come quite up to his usual standard. They revealed, however, a fine appreciation of Eastern methods of composition, of silhouetting, this "vista" idea, and flat tone arrangements.

Frank Eugene's and Mrs. Kasibier were of less interest. The striving for *painter-like* effect, we believe, will go more and more out of fashion. Eugene is strong in his specialty, but it does not ring true. Mrs. Kasibier's work, on the other hand, has grown more pictorial and impressionistic but at the same time more spotty and restless, which hardly condones for the gain. Miss Annie W. Brigman, well known for her serious imaginative work, handled a number of difficult problems with delicacy and discretion and with a rare artistic conscientiousness. But her pictorial effusions were "literary" rather than photographic. Clarence H. White had a room all by himself. It was a rare treat for the connoisseur, the admirer of photographic texture. Never was a photographer more passionately, more enthusiastically in love with his medium. In ideas, White is not over-ambitious, but he is perfect within his limitations, and he steadily keeps on the way to the realization of his particular ideals of fine photography.

The Open Section was very satisfactory. It showed, of course, less individuality than the main exhibits, but the workmanship was excellent throughout. There were twenty-eight exhibitors, and among them at least four or five that had never shown to better advantage before. Karl F. Struss, of New York, was absolutely unknown. He and William J. Mullins (who makes a specialty of miniature landscapes) succeeded each in having twelve prints admitted. Other exhibits that were particularly noteworthy were the delightful portraiture of Paul B. Haviland, the interesting bromide enlargements of scenes from all over the world by Dr. Arnold Genthe, of San Francisco, and the gum manipulations of Francis Bougière, also of San Francisco. Miss Laura Armer scored heavily with a beautiful light and shade study of a "Mother and Child," the only print she had on exhibition; and Mrs. Jeanne E. Bennett won a great and well deserved success with an exquisite nude, entitled "Woman and Vase."

The exhibition was indeed a triumph for the Photo-Secession, as well as pictorialism in general. Its main merits were the classic way of representation and the evenness of excellence throughout the exhibits. There were hardly a dozen prints that disturbed the harmonious result.

## THE SHOWCASE.

The showcase represents the beginning and the end of the photographer's efforts—the beginning, because he depends upon it to interest the people passing by his door, who have no other motive to move them in his direction than the effect it may have upon them, first, by attracting, and then by holding their attention.

It represents the finality of his attainments, because his finished work is necessary before a showcase can be arranged at all, and because the ideal showcase should contain only the best and most perfect specimens of his art that he is capable of producing, which should be culled from the work of months. It may readily be seen then, if this view of the subject is accepted, how important a matter it is that the showcase should be studied from every possible point of view, and arranged with the most consummate care and skill.

There are, it may be said, two widely different classes of studios to be considered under this heading, which are

capable of treatment by themselves, namely, the large city studio, where the range of specimen pictures is wide, and includes, among other advantages, a wealth of rich costuming, beautiful accessories, and charming models, and the less pretentious country gallery, or the studios located in the larger towns and smaller cities. It is not the purpose of this article to treat of the former class, but to consider more especially the case of the smaller studio, with a view to offering a few suggestions that may be of benefit in making the showcase do more than it does in attracting business —new business, too, it should be in most cases—to the reception room.

In the first place, the size and the style of the showcase cannot be made to conform to any hard and fast rule. Every one should be placed in as prominent a position as possible, and as near the height of the eye as may be. Its size and shape must conform to its surroundings, and the necessities that govern each individual studio. It should be a matter of religious observance, however, that the woodwork is kept well painted, the glass immaculately clean, and the shelves and contents perfectly free from dust. All these things are easily possible of accomplishment by anyone, and it is almost a foregone conclusion that when any of these details are omitted, and any symptom of slackness is allowed to make itself seen in the showcase, it is a sure indication that the general character of the work, for which the showcase stands, is no better than the symptoms would indicate. There is another point connected with the location of the showcase which the writer has not seen mentioned, but which it seems should be of advantage, namely, that in many places it will be easily possible to have a supplementary showcase located in some store or office frequented by the public, and situated at some distance from the studio. In this case, however, a sign more prominent than that used on the imprint of the card mounts alone should form an important part of the exhibit. Having now seen to it that the case itself is well painted and cleaned, the next thought should be for its contents, and for this the greatest care should be used in the selection of its subjects, aiming rather at quality than quantity, but covering as large a field as possible from time to time. This may be done in either of two ways, as, for instance, the display of a certain week toward the end of a school or college term might be kept almost wholly on the line of graduating classes. This, in the case of a man's college, would need something in the way of special attractions to break up its monotony, although in the case of a girls' school a very attractive display could be made all along the same line. Another week, at the beginning of the holiday season or Easter time, might be devoted to pictures of the children—the brightest and cutest collection of the whole year—and other special occasions treated in the same way. Or the case may be supplied during the major portion of the year with a collection covering a wider range of subjects, as, for instance, one or two children's pictures, a few of the brightest and most charming young ladies' pictures, the matron and the elderly person, all of which should be chosen with reference to their standing and position in the community in any cases where these qualifications may be added to thoroughly good technical workmanship. Another plan that works admirably upon occasions is to make several prints from the same negative, using two or three different methods of printing or kinds of paper, in accordance with the facilities of each individual studio, toning them in different colors, trimming differently, some with wide and some with narrow margins around the figure, and mounting them on cards of various shapes, kinds,

sizes, and colors. An exhibit of this nature will probably astonish the man who makes it as much as it should interest those who see it.

The case should not by any means be overcrowded, and where it is, as frequently happens, a part of the entrance of the studio, occupying the whole or part of the side wall, it should be covered in by glass, and either be painted or hung with cloth or burlap of a color to harmonize with the surrounding decorations. The prints to be displayed should be mounted upon wide-margined cards and grouped somewhat irregularly, leaving plenty of space between each and its neighbor, so that no idea may be suggested of their having been huddled together in a hurry.

As a closing maxim, let the showcase tell the story of thrift and good taste, then let the work of the studio verify this story.

## THE HISTORY OF PAPER.*

BY THE RT. HON. LORD REDESDALE, G.C.V.O., K.C.B.

WHEN your secretary told me that it was expected of me that I should inflict upon you a Presidential address, I was considerably embarrassed. The very words, Presidential Address, seemed to me to have in them something so imposing and solemn that I felt that such a title must be manifestly out of keeping with any remarks that I might be able to give utterance to. Besides this, I was conscious of the disadvantage at which I stand when compared with the eminent men who have preceded me in the occupation of this Chair. They were full of knowledge, capable of illuminating even such an audience as this upon the great subject of which they treated, whereas I, on the contrary—well, I will not trouble you with the vain boasting of modesty! I cast about for a subject. Science was clearly out of the question; the very word had better not be mentioned between us. Should I choose for my text the relation between the arts of painting, sculpture, engraving, and photography? This is a subject which has been exhaustively dealt with by your late President, speaking with an authority which I could not hope to rival. At one time I thought of passing in review certain recent exhibitions of photography, and indeed the idea found favor in the eyes of one of your most distinguished members, whom I consulted, but here I was met by the prohibitive difficulty of the very obvious analogy which exists between your pictures and babies. We all know, upon high authority, that there is only one baby in the world, and that every mother owns it; in the same way of artistic shows it may be said that there is only one exhibit, and every exhibitor is its author. Woe be to me, gentlemen, if I should attempt the impossible! Woe be to me if I should try to convince any mother of the inadequacy of her own progeny! My temerity goes not so far. Wherever I turned for a theme I was met by some objection; every door at which I knocked seemed to be closed to me; what could there be among the contents of my poorly furnished wallet which I might venture to offer to your Society? I comforted myself with the thought that my successors will be little better off than I am. At this date it is no longer of any avail to prate of the

* The Presidential Address delivered before the members of the Royal Photographic Society, London, October 18, 1910.

uses of your beautiful art, or of the advance which it has made under your fostering care—indeed, the very possibilities of the future have been largely discounted. The subject has been exhausted; there can be little now to tell about it, beyond such platitudes and commonplaces as are better left unsaid.

It occurred to me, however, that there might be some interest in leaving the ordinary groove of such addresses and attempting to throw some light upon the subject of any one of those many materials which we have in daily use, and which are so familiar to us that we have almost ceased to consider that they, too, have their life history, that they, too, have gone through many vicissitudes, which it may be instructive at any rate to trace.

In the course of a somewhat desultory way of reading, which it is my wonted habit to follow, I had occasion lately to inquire into the history—the very ancient history—of paper. I came upon much that was new, at any rate to me, and much which I thought might specially interest some of you as photographers; for, although paper is one of the most familiar necessities of modern life, there are, perhaps, few people who are more indebted to it than the men of our craft. It seemed to me then that, rather than weary you with any futile disquisition upon matters in which you are pastmasters, and I a mere tyro, I might perhaps venture to ask you to follow me in examining one subject upon which in late years the labors of two eminent Austrian scientists, Professors Karabacek and Wiesner, of Vienna, have thrown new and most interesting light. These two gentlemen, working quite independently, the one as an eminent Arabic scholar, the other as a no less distinguished microscopist, have arrived at the same conclusion, and it is upon the result of their work that the remarks which I shall lay before you this evening are based.

It has been a common creed that our modern civilization and culture is due to the invention of printing with movable type by Gutenberg in the year 1450. This, as Houston Chamberlain has shown in his *Foundations of the Nineteenth Century*, is putting the cart before the horse. "If there be anyone," he says, "who shares Janssen's opinion, that it is the art of printing that has given wings to the human mind, be so good as to explain to us why it is that the Chinese are without wings." According to Chamberlain it was the discovery of paper which, by furnishing a cheap and handy material upon which to work, gave the impetus which led to the spread of printing with such rapidity that, while Gutenberg was type founding at Mayence, other men were striving in the same direction at Bamberg, at Haarlem, at Avignon, and in Venice, and within twenty-five years printing presses were busy at work in almost all the chief cities of Europe; and this was the outcome of the invention of paper, a new, cheap, and handy vehicle for the diffusion of knowledge, which took the place of papyrus, silk, leather, and vellum, not to speak of the little cakes of clay upon which the Assyrians wrote their business notes, their official dispatches, and perhaps their love letters! Think, when you sit down to write a note, of the great king of Essyria, Hamurabi, who lived a thousand years before Moses, and who, wishing to summon three recalcitrant officials from a distant province, sent for a lump of clay like a cake of soap, wrote his royal command upon it, in cuneiform characters, sent it to be baked and inclosed in an envelope, also of clay, addressed and baked! That very dispatch, with its envelope, is now in the British Museum, with many others.

In printing we may almost say that

there was no absolutely new idea. The head and inscription on a coin or medal were forms of printing, the impression on a seal was nothing else, and seals were in use, as we know, thousands of years before the days of the Patriarchs. The founding of movable type was, of course, a giant's step in advance of the block, which was the first form of true printing, and which is still in use in China. But it was an improvement rather than an invention, and the improvement was due to the facilities offered by paper.

It is a matter of common knowledge that paper made of the fibrous pulp of plants was of Chinese invention. What is known among Europeans as rice paper, that curiously brittle, pure white material used for the marvellously minute drawings of figures and birds, flowers and fruit, in which the artist of the Middle Kingdom delights, is made of the pith of an araliaceous plant; rice does not enter into its composition. It is the migration of paper from China to Europe that constitutes the interesting part of its history.

During the early centuries of our epoch, Samarkand, which lies on the borders of Bokhara, and which had been taken in war by Said, the son of the Caliph Osman, in the year 676, was under the rule of the Caliphs of Bagdad, a fact which, by the bye, gives us some idea of the length of their arm and of the power which they wielded. It is a far cry from Bagdad to Samarkand; if you look at their relative positions on the map of Asia, taking into consideration the nature of the intervening country, you will be amazed at the might of an influence which could reach such a distance with the means of transport available at that time. Central Asia was then, as it has been in more recent years, the theatre of wars, prompted by international jealousies and racial ambitions. It happened that in the raid which ended in the capture of Samarkand the Arabs took prisoners a number of men, some of whom were probably Chinese, who were workmen skilled in the art of papermaking. These men establishing themselves among their captors, began to ply their trade in peace, and Samarkand became the recognized home of papermaking. But the Chinaman who is capable of invention, as some think, above all other men, seems to be incapable of improvement—indeed, to him all progress is odious. He makes something, is contented with it, and there it ends; witness the centuries upon centuries of block printing. Chamberlain, the scope and aim of whose book is to prove the superiority of the Indo-European to all other races, is careful to point out that the people of Samarkand, though subject to Semitic Arabs, were in fact Iranian Persians—that is to say, members of the same great Aryan family to which we ourselves belong. These Aryans, then, having received the idea of papermaking from the Chinese, were not slow to improve upon the invention, and the result was the development of the art, and the employment of a new material, linen rags, in the manufacture.

And here we come to an old friend in the person of the Caliph Haroun Al Raschid, the Caliph who is so well known to us on account of his nightly wanderings through the city of Bagdad, attended by Giafar, the Grand Vizier, and Mesrour, the chief of the eunuchs, as they are told in the *Arabian Nights Entertainment.* Indeed, that potentate has become so mixed up in our minds with Jins and fairies, one-eyed Calendars, slaves of the Ring, and slaves of the Lamp, that one is apt to think of him as a nebulous being, something like Sinbad the sailor, or Aladdin himself. As a matter of fact, he was a very great and powerful ruler, whose fame was so far spread that in days when newspaper correspondents were not, and interview-

ing had not yet become a fine art, it reached his European contemporary, Charlemagne, who even sent an embassy with a view to cultivating his friendship, receiving in return an embassy from the Caliph which brought him a present of a clock, worked by water, and striking the hours by means of balls dropped on a kind of drum, and adorned with little movable images of warriors and nobles. Nine years after his succession to power, Haroun Al Raschid, in the year of the Hejira 179 (corresponding to 795 of our era) sent for artificers from Samarkand, and established a paper manufactory at Bagdad, where the industry was maintained as a State monopoly, the secret of which was carefully guarded; and so it remained until the thirteenth century, a space of nearly five hundred years, time enough, as Chamberlain points out, for this wonderful intellectual weapon to have developed into a world-power had it been in capable hands. But the Arab, when he leaves his tents for the city, deteriorates to an extent which has become proverbial; as a child of the desert, he is brave, hospitable, a cruel enemy if you will, but a loyal friend, and in many respects a noble specimen of humanity; as a citizen, he becomes mean, vicious, dishonest—incapable, above all, of any intellectual effort. During the five hundred years that paper remained his monopoly, its results were absolutely nothing—beyond bills, notes of hand, official documents of no value, and I.O.U.'s—nothing but a few worthless, tiresome barren manuscripts, the loss of which, had they never been written, would have left the world no poorer. And so things might have gone on had not war for a second time played a decisive part in the life's history of paper. It was the Crusaders who lifted the veil of the mystery of papermaking, and in the last years of the twelfth century the art was introduced into Europe. The result was phenomenal. Even in the days before the establishment of printing presses the spread of knowledge by means of paper manuscript was fabulous—especially was it noteworthy in the spread of the New Testament—we may judge of it by the report of a Dominican monk, who was sent out against the Waldenses in the first half of the thirteenth century, and who said that all these heretics were preëminently well versed in Holy Scripture, and that he had seen uneducated peasants who could recite the whole of the New Testament by heart. Knowledge in the possession of Europeans is a very different matter from what it is when buried in the minds of Chinese, of Iranians, or of Arabs. It spreads like the beacon fires which, from height to height, told of the fall of Troy's citadel. As Chamberlain says, improvement followed upon improvements, until the first scientifically equipped paper-mill was established in Ravensburg in the year 1290. Printing followed, almost as a matter of course, and even in its primitive form, during a hundred years, gave out many books, printed from wooden blocks—especially the Scriptures. The world had but to wait fifty more years for the invention of the fount—that was the final perfection of the great double engine of civilization, paper and printing—but of these two, paper must be held to have been the more important power, for without it printing would have been of comparatively little value. Only think how few copies of any given book could have been printed on such costly and cumbersome materials as parchment or vellum, and you will realize the disseminating value of the new invention and its influence in the furtherance of all human knowledge.

It is difficult to say what would provoke in a German philosopher the pruritus or itching of investigation. It appears that certain persons of the baser sort—writers in cyclopædias, journals,

or other publications issued for the spreading of error—had had the audacity to assert that the artisans of the paper factory of Samarkand were in the habit of using cotton as their chief material. This was clearly not to be tolerated, and so the two professors, Karabacek and Wiesner, carrying on their inquiries, as I have said before, independently, set to work to demolish this false doctrine. The one brought to bear upon his enemies the heavy artillery of his oriental learning, the other the no less deadly and searching powers of his microscopic mitrailleuse. Professor Karabacek tells us, in the introduction to his great monograph on Arabian paper, that he was engaged in the examination and study of the collection of the papers belonging to the Austrian Archduke Rainer, and it makes one giddy to read that he has examined, tested, and catalogued some 12,500 Arabic documents without having exhausted its contents! In the course of his studies he became aware that in order to arrive at a correct knowledge of the history of paper, a minute examination of the material by a man of science was indispensable. With this idea he persuaded Professor Wiesner to study the subject microscopically, and, as he tells us in a note, the two scientists worked apart, Professor Wiesner not being made acquainted with the researches of his colleague. From this examination it results, to quote Karabacek, "that Wiesner has proved by his microscopic investigation and histological criteria that there never has existed a paper made of raw cotton, but that the manufacture as practised in the East and in Europe begins with the making of rag paper."

And now as to the date of the first making of paper. Wattenbach, in his treatise on writing in the Middle Ages, says: "The preparation of paper from cotton is said to have existed in the remotest times, and became known to the Arabs when they conquered Samarkand about the year 704"—a misstatement, which Karabacek annihilates from beginning to end. There is no proof that the Chinese ever put cotton to this use, for which, by the bye, it is ill adapted, and which is never mentioned in their lists of materials for the making of paper, nor is this to be wondered at, for the cotton plant was not introduced into China from Southern India until the reign of Kublai Khan, in the second half of the thirteenth century. That the Chinese were the first inventors of paper is admitted, but the date is uncertain. The first mention of paper is referred to the year 650, when it is said to have been introduced as an article of commerce into Samarkand from China; but all the dates given are confessedly misty and uncertain, nor, indeed, have they any very great importance or significance; the main facts are known, and it is perhaps enough that we should recognize the fact that the various sorts of paper which the Chinese carried into Central Asia were made of the pith or the pulp of plants, among others of the paper mulberry, *Broussoneta papyrifera*, which is still in use today, and of the refuse of silk. The confusion as to the whole question, not only of the introduction of paper, but as to the material employed by the Arabs is further entangled by passages in the native histories of Ali Ibn Muhammed el Farifi and Abu Ali Muhammed el Ghazali, who severally fixed the date at the year A.D. 704 and 707. Both state in effect that paper was introduced into Mecca by one Yusuf (Joseph), the son of Amru (or named Amru himself), who had learned the art in Samarkand, and taught the art to others. According to these authorities, which are considered, and, indeed, proved, to be apocryphal, it was to Mecca and not to Bagdad that paper first found its way from Samarkand.

The story is quite impossible. It is proved beyond the possibility of a doubt that the final victory of the "true believers" over the "unbelievers" in Khorâsân did not take place until the month of July, in the year 751, and the introduction of paper into Islam may safely be assigned to that year. All the stories of a great battle at Athlah by Zijâd, the son of Salih, a personage whose very existence is a matter of doubt, may be dismissed as idle tales, and with him disappears into the limbo of the father of lies, Yusuf, with his paper factory at Mecca.

As to the material which the Arabs used, following the recipes of their teachers in Khorâsân, there is very little mystery. It is true that the word which is used in the old Arab MSS. is El-Kattân, but that is probably due to the fact that flax was not cultivated in that country, and that the Arabs mistook linen, made from *linum usitatissimum*, for cotton. Jahiz, an Arab author, who died in the year 869 of our era, writes: "All men know that Khorâsân is the land of cotton, Egypt the land of flax." Such paper as that of the most ancient Arabian specimen in the Grand Duke Rainer's collection could not have been made from cotton, which, with its very elastic fibers, yields only a spongy, highly absorbent, porous material like blotting-paper, which must be thoroughly sized before it can be used for writing. Now the paper of the Grand Duke's MSS. is conspicuously free from size. Inasmuch as the flax plant was not procurable at Samarkand, the paper makers were driven to use the old worn-out stuffs which came to their hand, the fibers of which furnished the finest, the smoothest, and the thickest paper.

The making of paper from rags was not, then, the invention of the Chinese, who only became acquainted with it about two hundred years later. It was due to the ingenuity either of the Iranians (Persians) or of the Arabs; probably the former—for the Arabs adopted the Persian word kâghad, or kâghid, for it—a curious word, derived from the word kagh, noise, alluding to the rustling sound made by paper. This is one of those refined derivations which philology furnishes in support of, or as a clue, to history.

Six sorts of paper were made at Bagdad, and it is not a little interesting to find that one of them was named El Giafaridsh, after the Vizier of Haroun Al Raschid, the unhappy Minister who, after being for years the sovereign's favorite, was one of the victims of that tyrant's massacre of the Barmecides, the clan to which he belonged.

In the eleventh century the paper of Bagdad seems to have deteriorated, but Samarkand pushed the industry forward as much as ever and the paper of Samarkand, "Sultan paper," and "silk paper," made of coarse linen, were famous all over Persia. The silk paper, so-called because of its thin and delicate texture, was cunningly but very lightly sized with soap, and it was smoothed to a shining surface with a polishing stone. The influence of China continued very great here and along the whole Eastern boundaries; in the paper industry, as in many others, Chinese workmen were employed.

So much for the manufacture of this ancient paper. It was when paper left Samarkand and was distributed east and west over the civilized world that, as Karabacek says, it became epoch-making in the history of the culture of mankind. It will, I hope, not be without interest to trace the way in which it asserted its superiority over all other materials for writing. In the early days of Islam, papyrus was a vehicle for all documents, acts, and business records of the Caliphs. When the first Caliph of the Abbaside dynasty came to power, in the year 749, parchment was substituted

for papyrus. But this was only possible because of the great wealth and luxury of the Bagdad of those days. When Haroun Al Raschid succeeded as fifth Caliph of that dynasty, the two brothers Giafar, of whom I have already spoken, and El Fadl, being in high favor, the one became Grand Vizier and the other was appointed Governor of Khorâsân, with a residence at Samarkand. This latter appointment was pregnant with results for the world at large, for he it was who, seeing the extravagant expenditure on parchment for the daily increasing needs of the Government and public officer, advised the Caliph to substitute paper, which for some forty years had been manufactured in Samarkand. The experiment was a brilliant success, and we are enabled to fix the date of the establishment of a factory at Bagdad, the City of Salvation, at the year 794 or 795. Once started, there was no standing still; the industry grew and flourished to such an extent that, as Professor Karabacek says, "As in the case of other oriental products, weaving and ceramics, for instance, we may, instead of inquiring where was paper made, invert the question and ask where was paper not made?" Tihama, Yemen, Egypt, Syria, Palestine, North Africa, the Spain of the Moors, Persia, India, followed the lead of Samarkand and Bagdad. Is it not wonderful, is it not almost miraculous, that this invention which was destined to revolutionize the culture of the world should have remained for centuries the monopoly of the most unlearned and retrograde of the so-called civilized nations? What were the Romans about? Their arm was long enough, one would have thought, to have wrested this great engine from the almost savage hands which held it in their grip. Europe had to wait, for, although there was a manufactory at Shatiba, the modern San Felipe of Valencia in Spain, it must be remembered that it was a Moorish and not a Spanish industry. The secret was well guarded. You know how it was revealed and to what the revelation led.

I should gladly have laid before you more of Profesor Wiesner's discoveries, confirming and confirmed by Professor Karabacek's philological studies, but I feel that I have already detained you too long. One fact ascertained by Wiesner is worth recording. He found that such sizing as the Arabs used in Bagdad was made of wheat starch. In other places in Palestine, for example, the roots of the asphodel were used as size. Both were employed in Eygpt, where their use was jealously watched—for the asphodel starch was turned to account by roguish silk vendors to increase the weight of the silken thread, a practice which was strictly forbidden by law. It is consolatory to find that even in those ancient days adulteration was not unknown; it is not a new invention.

And now, ladies and gentlemen, the time has come to relieve you from my tedium. I have endeavored to give you the pith of the very minute and searching labors of Professors Karabacek and Wiesner, and if I have succeeded in any degree in arousing your interest you will agree with me that, though the scholarship and learning of the German scientist may sometimes seem to be a little meticulous, we owe them much gratitude for the unravelling of knots which would be a cruel trial to men of less patience.

---

The browner or yellower the color of the deposit forming the image in a negative, the higher is the printing opacity as compared with the apparent or visual opacity.

Greasy finger-marks should be removed from lenses with a piece of old clean muslin dipped in spirit.

By angle of view is meant the amount of view which a lens is capable of including within its circle of illumination.

## MODIFICATIONS IN PLATINUM.

A LECTURE on "Modifications in Platinotype and Recent Improvements" was given before the Royal Photographic Society, London, by Mr. W. H. Smith, whose long connection with the technical management of the Platinotype Company's factory entitles him to speak with almost unique authority on the use of platinotype papers. Mr. Smith throughout dealt with the variations in the standard methods of platinotype printing which might be made for the production of special effects or when working from more or less unsuitable negatives, and he demonstrated the very great latitude in these respects which is afforded by the various platinotype papers. In varying the scale of the print, obtaining a softer gradation with more detail, the use of old paper was recommended; the platinum pigment is attached more firmly to the paper and full advantage thus taken of the action of light. Another useful method was to print under yellowish-green glass. In securing greater contrast the best method was the addition of bichromate to the cold bath developer.

When using the black "Japine" paper, greater detail was secured, more still when employing hot developer, and still more again when using mercury in the developer.

In treating of the production of warm-toned prints on the black paper, Mr. Smith strongly deprecated the attempt to produce really warm colors, because these were not permanent, and in the case of developers containing mercury and citrate used cold would be of a really small degree of permanence. But if the process was limited to obtaining an agreeable warm black, it was one which could be recommended, mercuric chloride being used in the developer to the extent of 2 to 3 grains in 20 ounces. This was used at a temperature of 140° F., the paper being given a lesser degree of exposure. A further drawback to increasing the quantity (for producing a warmer tone) was the occurrence of double tones, the lighter parts of the picture being warmer than the shadows. This could be avoided by making up the developer with glycerine, which slowed down the action of the oxalate and so allowed of a more even warm tone, due to the mercury, being obtained throughout the scale of gradation. A suitable formula was oxalate developer, 10 parts; glycerine, 10 parts; 5 per cent. mercuric chloride solution in glycerine, 2 parts. The solution of the mercury was made in glycerine so as to avoid introducing more water than necessary into the developer, and thus avoiding markings when applying the solution with a brush.

Passing to "Japine" platinotype, the lecturer dwelt on the advantage of this class of paper in non-liability to abrasion of the surface. "Japine" also was much more sensitive to warm toning by mercury, a distinct warm black being given by a developer containing 1 part mercury in 10,000 parts, but for a rich warm sepia it was best to use the sepia "Japine," or to be content with the warm black which was readily produced on the black "Japine" by a developer at 150° F., in this case printing only about 50 per cent. depth.

Referring to the sepia platinotype, the lecturer stated that its uniformity of manufacture was practically perfect, and it was not now so affected by damp as formerly. Paper left in an ordinary drawer for sixteen hours would yield prints indistinguishable from those on paper stored in a tube. Moreover, the paper had now much greater latitude, the shadows not blocking if printing was somewhat overdone. But it was impor-

tant to have the developer kept at an exact temperature. Differences of 10° would show variations in the color of the print. About the best temperature was 160° F., and it could be taken as a general rule that the richest effects were obtained with the hottest developer.

The sepia "Japine" paper allowed of warmer tones, and soft or hard results being more easily obtained, while its latitude in exposure was much greater. With a variation of 30 to 40 per cent., prints would all be good, though varying slightly in depth. The lecturer demonstrated the above working methods, using a series of large prints from landscape negatives by Mr. E. A. Salt and others of copies of old masters kindly lent by Messrs. W. A Mansell & Co. In conclusion, he demonstrated the use of platinotype fabrics, and gave one useful hint among others—namely, the use of a 5 per cent solution of celluloid in acetone. This is brushed over the fabric prints, and renders them almost as stiff as a paper print when dry, the surface being at the same time admirably prepared for any description of coloring, while prints thus stiffened could be most easily mounted.

## MACHINE SHOP PHOTOGRAPHY.

THE photographic department of a modern machine manufacturing plant is considered at present almost as essential and important an adjunct to the successful operation of a concern as the draughting room or tool room. It should, therefore, be fully equipped with all the accessories of a first-class photographic studio, and when the business is such as will warrant the outlay a professional operator should be put in charge. The great majority of manufacturing establishments, however, do not care to increase the scope of this department beyond a simple record of standard machines built at the present time, for the purpose of furnishing photographs to intending purchasers; consequently, an amateur, who may be one of the firm, a draughtsman, or even a workman in the shop, is selected to do the photographic work which may be required from time to time.

It is the writer's purpose here to outline a system of machine shop photography which is the result of many years of experience in a small way, and is in every way suitable for even the modest concern to adopt. As to the uses of shop photography—they comprise, to begin with, the supplying of photographs of the various products of the establishment, to serve advertising purposes. These photographs are usually made from a point of view that will most readily show the machine as a whole, substantially as it would look to an observer standing at its side or in front of it. This does not always give to an intending purchaser any idea of its construction or the arrangement of the working parts. However, it will in many cases be sufficient, though occasionnally a prospective purchaser desires to be further informed regarding other points which are only obscurely shown on this general picture, and in order to enlighten him it may be necessary to make such other views as will explain them.

One must anticipate what is wanted, and should photograph the machine from different points of view. Photograph the working parts, often a single part, especially if this part is a feature unique in that particular design of machine—for instance, on a planing machine, the view looking down into the gearing. This will show how it is

arranged and driven. Then there are the feeding devices, the cutting heads as a whole and in detail, oiling devices in tracks, belt-shifting devices, and others, of all of which photographs would be desirable.

In the case of a lathe, photographs would be desirable of the cone head, taken in such a way as to explain its construction and special features; of the carriage and apron, with views showing its working parts; and of the special tool block, taper attachment, or any other device for which superiority may perhaps be claimed over a competitor's design and which it may be desired to impress upon a prospective purchaser. But there are many other things as well which may come to the mind of the intelligent and progressive shop photographer, all tending to increase the value of his department.

Anticipate what your customer may desire to be enlightened upon regarding your machine, and be prepared with a good photograph to answer his question. It does not follow that such photographs should be sent out broadcast in answer to every inquiry. In fact, it would not be good business policy to do so, as you might be giving your competitor the very assistance he was desiring to get so as to improve his design.

These detail photographs, as we call them, should be in the hands of your travelling men and your selling agents, to be used by them solely for the purpose of selling your goods. Nothing can impress or influence a possible purchaser more than a well-selected lot of fine photographs, showing a machine completely in all its working parts.

Again, photography can be of great use in making copies of standard drawings. These copies may be bound in book form, each book containing a complete set of working drawings of such machine. These drawings can be easily carried along by travelling selling agents, and, with the detail photographs of the machine itself, most intelligently explain the machine to be sold. Photographs thus made on 8-inch by 10-inch plates and blue printed are of ample sizes to clearly show all lines and dimension figures, and are much easier to carry about than the large blue prints or tracings of the original drawings.

Again, where certain changes are made in existing types to meet the requirements of special orders, such changes can be photographed and a copy filed with the complete order for future reference, should occasion require it, as in the case of repairs, for example. This applies principally where some change is made or ordered in standard patterns and is made to fill only this particular order, the pattern being afterward changed back to its original condition.

Photography can be used to advantage also in the pattern room, in making records of patterns, especially in the case of a complicated pattern that it would be difficult to understand or to explain to the foundry man. In the case where patterns are sent to a distance to be cast, photographic records would show just how the separate pieces went together, especially if each piece in the photograph had a number marked on it corresponding to the number on the pattern piece itself. All patterns could be photographed on a small, inexpensive plate, and a print from each pattern could be made a part of the pattern record. If the card index be used for a pattern record, the photograph could be pasted or printed on the back of a record card, and this would show at a glance, even to a novice, the shape and character of the pattern itself, and would aid largely in picking out this particular pattern in the storage loft when occasion required it.

In the foundry, a photograph taken in the process of moulding a complicated piece might be of great value for future

reference should the same piece be ordered again, and might be the means of saving considerable money in making the piece a second time, especially if a new man had the making of it.

In the machine shop photography would apply equally in showing the work in its several stages, making a picture record of a complicated machine from the time the first machining was done to the final or completed machine ready for shipment. Of course, it would be desirable to do this only in cases where some special methods and appliances were used which would be of value and assistance should a similar problem arise in future work. A reference to what had been done in the past on similar work might be the means of saving much time and expense.

Regarding the apparatus and methods employed in getting the best results, every photographer has his own pet notions and way of doing his work. He has a preference for a certain make of camera, plate, developer, etc. I do not care to discuss this question, nor do I wish to assert that my way is the best. I propose only to outline the method I follow, as one that has given me the best results in my particular work.

In the first place, a good dark room is indispensable. It should be of ample size, should be well ventilated and "well lighted"—the light so arranged as to be readily adjusted to be able to work the quickest on the very slowest plates, or made light enough to see what you are doing when toning or developing. There should be a sink with running water, passing through a filter, and places or shelves at each side for your hypo tank and stock solutions. A rack over the sink is desirable for holding the developing tray and your washing box near at hand. Other shelves should be suitably placed for storage of plates, and a rack for storing negatives, drawers arranged to keep supplies, paper, etc., with a broad top, to be used as a table.

If possible, arrange this room so as to enable you to do all your work in it, except the printing. Don't allow a lot of unlabelled or empty bottles or boxes to accumulate. Keep everything perfectly clean about the place. Have a place for everything and keep everything there. Select one brand of plate that you have found to work well in your particular work and stick to it. The same advice can well be applied to the developer.

On machinery there is so much light and shade that great care must be taken to light it properly. If possible, place the machine where the light comes in from the north, but not where the strongest light comes from the top. The upper part of a machine is usually made up mostly of bright work, and will be overexposed before the lower portion, which is usually dark, painted work, has had normal exposure; therefore, it may be necessary to screen or cut off top-light and reflect light into the darker parts of the machine, so as to give uniform lighting.

I find it desirable, where there is much bright, polished work, to dull it by taking a ball of putty and tapping it over the bright work. This deadens the polish. This is necessary only where there is strong reflection. It is not desirable to have the picture too flat. Contrast makes an effective picture. Painting the castings a light color makes a very attractive picture, but the idea of a machine photograph is to give a picture which looks like the finished machine, and this is not the case where light paint is used. I find that by cutting off the top-light and reflecting light into the dark portions of the machine I get a picture which is very satisfactory.

Reflectors can be made of frames covered with white cloth, or paper preferably, which can be placed at such angles as to throw a large amount of light on to the machine in the places where it is most needed.

(To be concluded in our next issue.)

By D. O. Hill (1802-1870)

*International Exhibition, Buffalo, N. Y.*

With permission Photo-Secession

RODIN

By E. J. Steichen, New York and Paris

*International Exhibition, Buffalo, N. Y.*

With permission Photo-Secession

SIR HENRY IRVING

By J. Craig Annan, Glasgow, Scotland

*International Exhibition, Buffalo, N. Y.*

With permission Photo-Secession

Black and White

By Robert Demachy, Paris

*International Exhibition, Buffalo, N. Y.*

With permission Photo-Secession

By George H. Seeley, Stockbridge, Mass.

*International Exhibition, Buffalo, N. Y.*

With permission Photo-Secession

By J. Craig Annan, Glasgow Scotland

*International Exhibition, Buffalo, N. Y.*

With permission Photo-Secession

By Paul B. Haviland, New York

*International Exhibition, Buffalo, N. Y.*

With permission Photo-Secession

California Type

By Arnold Genthe, San Francisco, Cal

With permission Photo-Secession

## RESTORING OLD DAGUERREOTYPES.

THE modern woman, along with her wish to have everything about her not only up to date, but even a little in advance of her contemporaries, displays an equal interest in preserving everything in the way of heirlooms. Recently in a photographic studio where daguerreotypes are restored this fact was made manifest not only by the people who came and went but also by the anecdotes related by the proprietor.

He admitted at the start that he was a little upset by his want of tact, and inquired anxiously if the middle-aged gentleman encountered at the door of the studio by his questioner seemed to be perturbed. On being informed of the contrary, he related how the middle-aged gentleman had brought with him a charming old daguerreotype, which he took from the case and opened as he talked.

It showed a very pretty young woman dressed in the mode of 1850, her hair parted in a broad white line reaching from low on the forehead to the back of the head, where the hair was tightly knotted in a manner that would have been unbecoming to anyone not blessed with more than the usual share of good looks. A low-cut dress was outlined by a lace turnover collar fastened with a brooch, and in the curve of the well-moulded arms was a bundle of white in different shades, which resolved itself on closer inspection into a semblance of a baby of three or four months, wriggling amid several swathings of muslin clothes.

"The man," explained the photographer, "had the picture wrapped up in many coverings of tissue paper and these in turn in a piece of old velvet. There was no doubt he treasured it very highly, and after I had turned it to the light and noted the amount of damage inflicted and the amount of repairing to be done he asked me what I thought of it.

"I told him it was a very good example of daguerreotype art, and then said offhand that it was strange how a beautiful young woman like the one of the portrait could ever have had such an ugly baby. The man coughed behind his hand, and then said abruptly that he was glad I thought the young woman was beautiful as that was the picture of his mother, and mentioned, without going into tiresome details, that he was the only child.

"The reason I blame my want of tact," continued the photographer, "is because as a general thing I can trace family resemblances. Usually, I say, just as soon as a woman—the majority of my patrons are women—or a man brings me a daguerreotype, 'This is your grandmother,' or grandfather, great uncle or aunt, and I rarely make mistakes."

One after another several scores of daguerreotypes are taken from their receptacles and placed side by side on the showcase. Some of them are in a very dilapidated condition, some as good as the day they were taken except for a slight fading of the velvet pad, or a tone to the metal piece outlining the face that tells of old age.

"One difference I notice in the people who come here with daguerreotypes to be restored or photographed," continues the artist, "is that the New York woman is undoubtedly just as proud of the fact that she has ancestors who had time and money to have their faces perpetuated in this way as any woman of New England or the South; but when she brings one here the lack of family sentiment—that is particularly marked in

New England—is evidenced by the fact that she never wants more than one copy made, and that for herself, while the New England woman usually leaves an order for several and intends them for others of her family.

"This same is true of Southerners, while the Westerners are like the New Yorkers in looking out for themselves. A great many of the Western daguerreotypes, by the way, are portraits that were taken there when families packed up and emigrated, as they called it then. Usually they have been carefully preserved, and show every evidence of having been the objects of great esteem and veneration.

"Most of the damage to old daguerreotypes has been done by the children, who were allowed to pry them from the tight-fitting interiors to see how they were made. A woman the other day brought me one to be photographed from, and before she took it from its wrappings said that nothing had ever happened to it, although she had moved about a great deal, except that the children had taken it apart. I knew, of course, what that meant; that the surface would look just as if it had been scratched with a knife blade, and sure enough, it did. Children and daguerreotypes should never be left alone in a room together.

"A woman came in the other day with a daguerreotype case in her hand and told me that she wanted a photograph taken from the portrait of her father for the Christmas present of a sister who lived in California. She was most enthusiastic and said that it was in splendid condition. It had never been tampered with and was sealed just as it was when the picture was taken.

"Sure enough it was; but the portrait instead of being a daguerreotype was a tintype, a process that followed after daguerreotyping, was much cheaper and in its early days was often palmed off on the unwary for the more expensive and finer kind. I did not tell her the mistake as long as she did not know it herself; no one could be deceived who put the two examples together, for there is a great difference in them.

"Many people, I believe, were taken in by the cases, for there seemed to be an unwritten law that the daguerreotype case should not be used for tintypes, and that was seldom infringed upon by reputable photographers."

A woman who has wandered in to get a daguerreotype of her grandmother restored comments on the gentle expressions of the woman of the daguerreotype epoch. Almost without exception these women of the daguerreotype epoch are serious, sedate creatures, their costumes usually plain, occasionally in youth showing love of finery, but this finery always of a very conservative kind—a bit of lace, a flower, a locket maybe, or a slender thread-like chain, an embroidered muslin yoke and undersleeve. Handwork only was worn and life was too strenuous a proposition to allow of much leisure being spent in personal adorning. You need to see a group of the typical twentieth century women looking at these portraits of their ancestors to realize the tremendous difference marking the chasm of time between.

"I always think," remarked this particular woman, "when I see the Victorian woman with the meek expression, the sloping shoulders, the general air of absolute submission, the lack of so-called character, the woman who brought large families into the world and brought them up uncomplainingly with but a single word, 'duty,' on her heart and mind, of a gravestone I saw once in an old cemetery in Annapolis, Nova Scotia.

"The stone was long and narrow. On it were recorded in many lines the transcendant virtues of one Eliza, who was word painted as being a faithful wife

and daughter, as well as an adoring mother. She was said to have departed this life at the early age of twenty-eight, leaving behind her a sorrowing spouse and nine small children, who bitterly mourned her loss while resigned to the Maker's decree. You thought particularly of the nine small children and the twenty-eight years when you read the concluding line: 'Why did Eliza leave our sphere?'

"I thought I could throw some light on the problem suggested if anyone really wanted me to."

The photographer takes a conservative view of the situation and explains that what to a modern eye may seem resignation of character is oftentimes in these old portraits only a resignation of mood and moment, the daguerreotype by the very nature of its being requiring a long exposure, which meant that the lines of the face often became very rigid and fixed. The strong light was also a trial, and the only marvel is that the portraits are as perfect in line and expression as they are.

The old-fashioned head-rests at that time were an indispensable adjunct of the studio, whose proportions were incidentally to blame for the fact that all old daguerreotypes were half or three-quarter length figures, and that the full-length portrait was exceptional.

"The daguerreotype artist had absolutely no compassion on his sitters," said the photographer. "He would continually caution them to keep still, and at the least movement he would destroy the plate. Having the picture taken in those days was really a labor of love, if not of vanity.

"You didn't dash into a studio, arrange yourself before a mirror, and in five minutes have half a dozen exposures made which, in the course of three or four weeks, if lucky, you may have to select from in proof form. No, the chemical work in the photo laboratories was done by men who understood their business well, having been trained in the old school of thoroughness, and, the preliminary work of sitting over, the patron waited and invariably had the finished portrait in her hand when she left the studio.

"Only one was taken at a time, and as these usually cost about $5 or $6, families did not have them taken frequently. Money was not so plentiful, and luxuries, even in well-to-do families, were kept within very strict limitations. I heard an old gentleman say that in his day the daguerreotype artist would not average one failure in three weeks; that they seldom had to destroy a plate, and then only because the sitter moved, not because they had made a mistake of light or of posing.

"When the tintype came in it was practically the death of the daguerreotype, for it was possible to make four of these at one exposure, and the beginning of photography coming along, there was no place left for a process expensive and slow, no matter if it was, in many ways, much the superior of either of these in the early days of experiment."

As the photographer is showing the difference between a copper-plate daguerreotype and a silver-plate one, the former being of later origin and cheaper, in consequence of which it became very popular, having the additional attraction of showing a rosy tint to the flesh, a young matron comes in and unwraps what she calls a daguerreotype of her mother, who seems to be about sixteen in the picture, and who wears a shoulder cape of embroidered muslin and her hair braided down her back. The photographer tells her that the article is really an ambrotype—that is, done on glass, instead of copper or silver plate—and that ambrotypes are much rarer than daguerreotypes, because they have withstood the wear and tear of time less well.

During the War there was a lively trade in picture taking, and many a daguerreotype that is restored today was a souvenir from the army, sent to sweetheart or wife. Some of these are taken in civilian dress. One shows the ruddy face of a young man with a silk hat set rather rakishly on his head and a black silk stock wound about his throat over a speckled waistcoat.

The travelling photographer was a feature of the latter years of the war. Those photographs done with albumin or gelatine paper are, of course, badly faded, as a rule, and do not compare with the daguerreotypes in point of freshness, but they were a novelty, and, in consequence, popular.

The photographer, who is a mine of information on the subject of costumes, says that it is necessary for him to know them to minute details, for often in photographing from a daguerreotype he has to make up deficiencies from other pictures of the same period—a waistcoat from one, a coat from a second, as is required. He describes the work as fascinating.

"I first commenced in a regular photographic studio in New England and frequently people came in with these heirlooms to be touched up or photographed from. The proprietor of the place was not interested in the work; he did not think there was much money in it; so, little by little, it all fell into my hands, and I have profited by the growing desire to have these heirlooms perpetuated, and have made a specialty, and a paying one, of the profession.

"The Christmas season is a very lucrative one, and from Maine to California every mail I receive orders for restorations or photographs from originals.

"One of the portraits put into an old-fashioned frame makes a very interesting gift, particularly for the people who are wandering aimlessly about trying to discover something a little out of the ordinary and are willing to pay for it."—*New York Sunday Sun.*

## THE REFLEX CAMERA FOR PORTRAITURE.

BY W. S. CROLLY.

PROHIBITIVE prices and over-exploitation of speed features have militated against the reflex camera's general adoption for the more serious business of portraiture. Evidences are not lacking, however, that it is slowly making headway as a studio proposition. At the Rochester convention, in 1909, a prize for the most useful photographic appliance was awarded the inventor of a reflex attachment adapted to the ordinary studio box.

But in cold fact the reflecting camera is not the best instrument for photographing rapidly moving objects at shifting distances. The best tool for that purpose is the one suggested and used by Dimock for his leaping-tarpon pictures—a small ordinary camera fitted with a fast, rather short-focus lens, speed shutter, and a rack and pinion focussing movement blocked between infinity and twenty-five feet, with one or two clicking locks for intermediate distances. Such a camera can be used at eye level with a direct viewfinder, and the focus shifted more rapidly and accurately than that of a reflex. With the focussing screw levered directly to the release, focus and exposure may be effected almost simultaneously.

But for the studio and home portraiture the reflecting camera is unrivalled, with certain disadvantages.

The three great advantages are: Composition and character observation from the lens point of view; ability to use lenses of large opening, with quick, precise focussing; the wealth of illumination given by the focal-plane shutter at low speeds (from one-tenth second up).

The disadvantages are: In the studio the "operator" must provide and move about some sort of pedestal if the camera is to be used at eye level. (For home portraiture he will be obliged to requisition a kitchen chair, cleverly preserving his equilibrium while peering into the hood. The writer once lost his balance, with farce-comedy results.)

Finally, when making interior time exposures with the auxiliary between-lens shutter, it is often necessary to fold down the hood in order to observe the subject over the top of the box. But with rapid plates, fast lens, and the focal-plane shutter, exposures of one-tenth second should be quite practicable in a good studio light, and the gain in spontaneity over time exposure is not to be reckoned lightly. A slow exposure is rarely necessary out of doors, which reveals the crux of the matter; the reflecting camera is an efficient tool for "instantaneous" work, and its logical and consistent use demands it be held in the hand and that results, pictorial and otherwise, be apprehended on the ground glass. The exposure estimate being correct, all attention should be fixed on the right-side-up flat image; if pose and expression are satisfactory, blaze away—you can bank on the finished product being a fair replica.

Regarding the best American reflex camera for portraiture, much pro and con may be weighed. For strictly instantaneous work, the set shutter instrument is superior. The interval between mirror release and exposure is only about one-tenth second, and the action is incomparably smoother. With the mechanically raised gravity-set shutter the interval is about one-fifth, and when operated more rapidly there is considerable attendant "bang;" but in the case of a bulky 5 x 7 reflex, the bark is worse than the bite. The writer has frequently made hurried exposures in one-fifteenth second with entire freedom from vibration. For time work the gravity shutter is by far the handiest. The curtain is set full open, and after focussing, the lens is closed by the auxiliary between-lens shutter, the mirror quickly raised and locked for "time," and exposure made as usual.

The reflex for portraiture should imperatively have a reversing back. For general purposes it is practicable to hold the non-reversing box in hand at eye level, but it is an awkward business for portraiture, and the image is dimmed by the extraneous light.

For professional purposes and contact prints the 5 x 7 is the best size. The half-plate box is scarcely less heavy and massive and infinitely less useful. For enlarged negatives or projection on bromide or developing papers, the quarter-plate is the amateur's instrument *par excellence*. The 4 x 5 is a compromise, considerably more bulky, occasionally yielding useful contact negatives, but more often those requiring enlargement. For home portraiture lenses should be, respectively, of six or seven and ten-inch for the quarter-plate and 5 x 7 sizes. The cramped situations obtaining in this class of work generally preclude longer foci lenses, but the sizes suggested are the permissible minimum. For, while the exaggerated perspective of short focus lenses may be partially counteracted by tilting downward, it should be pointed out that this may be easily carried to excess, and in some cases is highly undesirable in any degree. For the 5 x 7 and contact

prints, the $f/6.3$ anastigmat is not absolutely necessary; one of the better class of rectilinears working at $f/6$ will answer admirably; but for the quarter-plate enlargement the corrected lens is indispensable. If the purse is sturdy, an $f/4.5$ anastigmat is still better. The anastigmat is not an ideal lens for portraiture, but unless the Petzval lens has a diffusing attachment, it has all the anastigmat's "fault" of critical central definition, while its marginal field is impossible. However, sharp definition is not necessarily displeasing, even in portraiture, and much of the deplored "wiry" effect is often the result of bad lighting or bad negative making. Exquisite results are obtained with rectilinear lenses of great opening and focal length.

The quarter-plate revolving back Graflex is excellent for portraiture, allowing great latitude in lenses. For ordinary purposes it may be fitted with a seven-inch anastigmat, preferably one working at $f/4.5$, while for bust portraits it will carry an $f/6$ rectilinear of twelve-inch focus, with beautiful results as regards drawing and atmosphere. It will even accommodate one of the smaller type of Petzval lenses, of aperture $f/5$, and long enough focus to bring the plate within the field of critical definition (about 22 degrees, or one-third the focal length of the lens). One great advantage of the quarter-plate size is the general depth of sharpness resulting from the shorter focus lenses used. This can be upset to any desired degree in the controlled enlargement, and the gain is particularly apparent in seated figures. The seven-inch lens has twice the depth of field of the ten-inch lens at equal stop values, and the longer focus anastigmat at full open has an exasperating trick of picking out planes with cruelly irrelevant definition. For amateur purposes the quarter-plate camera has all the weight of the argument.

For the studio, with plenty of room for "operating," the choice falls on the 5 x 7 long focus Reflex, which will accommodate lenses of focal length equal to three times the base line of the plate. This should be mounted upon the usual studio stand, and the extension front will require a travelling support if the lens is of the heavy "long Tom" cannon type.—*American Annual of Photography*, 1911.

## BLOCKING OUT.

A TASK which sometimes confronts the photographer, but which I have not seen dealt with in any recent publication, is the blocking out of parts of a negative so that the rest may stand out clearly against a white background.

It is chiefly in the case of photographs of machinery, and in similar forms of commercial work, that this is required nowadays, for it seems to be generally accepted that the blocking out of skies with opaque pigment leads to a falsification of tones and to a loss of that true softness of outline which even the most optically perfect lens will give on a gelatine plate. A painted-out sky always proclaims itself as such, and more than that need not be said as far as pictorial work is concerned. In commercial photography there are other considerations, and a photograph of an engine, for example, often gains very much by the blocking out of its surroundings.

### *The Sort of Desk Required.*

The first thing to settle is where the work is to be done. It cannot be carried out with the negative lying flat on a table, as the image cannot be seen, and

the slope of the ordinary retouching desk is too steep.

In my own case I have a sloping drawing-board, with one edge some 3 inches higher than the other, and into this board is let a piece of plate glass 15 inches by 12 inches, so that it is flush with the board, its front edge being some 3 inches from the front edge of the board. A sheet of white card lies under the plate glass, and an incandescent electric lamp on a length of flexible wire lies near the card. Some such arrangement as this is a necessity for this work, but it can generally be extemporized when there is only an occasional negative to deal with.

### *Materials Necessary.*

The materials required are a bottle of liquid Indian ink, one or two mapping pens, a couple of sable brushes (No. 4 and No. 8 for choice), a ruling pen, a tee square, and a celluloid set square. Other tools may be added to the list, and some negatives can be treated with less than these, but this list includes all that are likely, with any average negative, to be a necessity.

The negative should have a trial print made before any work is done on it, and this print should be toned and fixed, so that it may serve as a guide all through the work. A negative can be blocked out after varnishing it, but the surface of the varnish makes the work harder, and so it is usual to do it direct on the gelatine of the negative.

### *Fastening the Negative.*

A piece of thin card larger than the plate glass is taken, and an opening cut in it the size of the negative. The negative is inserted in this, and is attached to the card by lantern slide binding strips applied to the glass side. It is then possible to attach the negative to the drawing-board, just as a drawing would be attached, by means of drawing pins passed through the card. Where there are many straight lines to be blocked out this will be found a great convenience.

The blocking out should commence with any small portions of the background visible through openings in the machine, constant reference being made to the guide print to be quite certain that it is background and not some part of the machine itself that is being taken out.

This may seem a needless caution, but an experience of some years has shown that it is by no means unnecessary, especially when the photographer is not very familiar with the particular machine on which he is at work.

### *The Use of the Pen.*

This work may be done either with the pen or the brush, the writer prefers the former. The pen must be used lightly to lead the ink over the surface, and no pressure applied to it or it may tear the film. The corners should always be done first, with lines leading away from them. There is no need to attempt to fill up the whole space with the pen; all that need be done is to trace a fine black line which is the outline of the space that is to be blocked out. It may be filled in subsequently with a brush; for choice, when the outline is dry.

It is best to do all such details first, leaving the main lines of the blocking out to be done at the finish. The negative may be turned about as convenience dictates, and the work, beginning toward the centre, be carried outward to the edges—a plan which is easier than that of beginning at one side or at the top and working across the plate.

*Ruling Straight Lines.*

Straight lines cannot be properly blocked out by hand, but with the ruling pen and a straight edge they are easily done. The work may be carried out up to the ends of the straight lines with the mapping pen or brush, and then allowed to get dry, after which all the straight lines may be ruled in. Occasionally it will be found easier to block out a straight line by means of a lantern slide binding strip with a clean cut edge, but usually it is easier to put them in with a ruling pen, as the strips have a bad habit of sticking where they are not wanted.

*Correcting Mistakes.*

When this work is being done, however skilful the worker, there is always a possibility of the ink being applied where it is not wanted. If this is detected at once, the little finger should be applied to the surface of the film just in front of the trespassing ink, and this should be wiped back on to the work already done, or on to the space that is to be blocked out. It will leave a smear there, but that does not matter; it is generally easy to wipe the part that is to be left clear with a single touch of the finger. The place should then be allowed to get quite dry before doing the work over again.

Much of the neatness and delicacy with which the blocking out is done depends upon the proper care of the brushes and pens. The mapping pens should only be dipped a very little way into the ink, and every two or three minutes, or oftener, should be wiped quite free from ink with a duster. Nor must the ink be allowed to dry on the brushes, which should be rinsed frequently in water and washed quite clean and allowed to dry when the work is over for the day.

*Filling Up Big Areas.*

When all the outlines have been traced in the way described, the spaces within them may be filled up with the ink. Some forms of liquid Indian ink are unsuitable for this, although they answer very well for the line work; their fault is that in a large area they do not dry solid, but with cracks. If the ink in use does this, a bottle of one of the ordinary opaque varnishes sold for blocking out must be obtained for the purpose. "Photopake" is, perhaps, the best known, and is used by some for all the blocking out, but for fine work the writer prefers the "artists' liquid Indian ink."

Large areas to be made opaque are blocked ou' very conveniently by cutting a piece of thin black paper to the required size and shape, gumming it all over, and when limp putting it down on the film. It should be cut a little smaller than the opening it is to fill, to allow for its expansion on being wetted, and when the adhesive used is quite dry the gap round its edges may be filled in with a brush and some Indian ink.

*A Help When Photographing.*

If a sheet or similar white surface is put behind the object when it is being photographed—a screen of sheets of newspaper gummed together does very well—the work is simplified by showing at once where the blocking out is to be done. The white paper also helps the illumination of some of the shadows.

In this way it is very easy to isolate any particular object on a negative, so that it stands out in the print against a plain white background. The task of blocking out requires care, but no great skill in the way of drawing; but patience is the virtue most needed of all, and with this on hand it is surprising how much may be done.—A. O. Dixie, in *Photography and Focus.*

---

MAKE better pictures in 1911 and raise the price.

## GLASS CUTTING.

THE photographer is often faced with the necessity of cutting glass, yet often shirks it and calls in the aid of the professional glass-cutter. The stereoscopic worker can save a vast amount of time if he cuts his negative and mounts the two pictures in their proper relative positions on a cover-glass, for then he can produce prints on single sheets of paper that can be readily mounted in one piece. Further than this, he can produce transparencies without using more or less complex special printing frames that take up much time in use and require special care in exposure. The professional worker is, however, more directly interested in cutting glass for framing purposes, for it is much cheaper to buy the glass in large sheets and cut it oneself than it is to buy it in various ready cut sizes. Many do not attempt to cut glass because they are under the mistaken impression that glass cannot be cut properly without a diamond, while a good diamond is expensive and also difficult to use. That diamonds are expensive is more or less correct, for though the second-hand price of a diamond is only about two to three dollars, yet it is so readily damaged and rendered useless that it is seldom safe to buy any but new diamonds. New ones of good quality, however, only cost from about five to ten dollars, so the price is not very outrageous, and most professionals would find a diamond to be a fairly good investment if they took proper care of it. There is no particular difficulty in using the diamond, and a first attempt should succeed if it is remembered that it is not the point of the diamond which is the part used for cutting, but the cutting edge which comes into play when the sloped end of the steel mount is approximately parallel to the glass surface. When it is cutting properly the only sound made is a faint squeak. A rasping, scratching noise means that the diamond is not cutting, only scratching the glass, and with a good diamond this affect is produced only when the tool is being held too upright or being used with too much force. Three different kinds of diamonds are sold: plate diamonds for thick plate glass, sheet diamonds for thick sheet glass, such as that used by glaziers, and crown diamonds, for thin sheet glass, such as that used for photographic plates and picture framing. The crown diamond is good enough for general use, and its price varies according to the actual size of the stone, not necessarily with its quality as a cutting instrument

The only alternative to the diamond is the wheel glass-cutter, and while the cost of this varies from ten to twenty-five cents, it is really just as serviceable to the photographer. It is of no use for extremely thin glass or for thick plate, but for ordinary sheet glass it is very effective. It is, perhaps, to be preferred by photographers, for two reasons: first, it is easier to use than the diamond for cutting dry plates in the dark, which is sometimes a necessary operation; and it is more reliable for cutting old glass. Glass which is old and of poor quality will not cut readily with the diamond—that is to say, it will not break along the line of the cut; but it is rare to meet with glass that will not yield readily to the wheel-cutter if the tool is sharp and in perfect order. This is one reason why glaziers prefer the wheel for general use. Sharpening the wheel is quite a simple operation, though it takes a little time, owing to the hardness of the steel. Take a soft piece of straight grained wood and run the wheel along the grain until a groove fitting the wheel edge is formed. Then take a sharp knife and

run its point along the bottom of the groove so as to deepen it where the wheel-cutting edge comes. Sprinkle some very fine carborundum or emery powder over the groove, add a drop of oil, and then run the wheel backward and forward in the groove for three or four minutes, pressing it against the opposite sides of the groove alternately.

In selecting a cutter, pick out one with a thin wheel and see that the edge is sharp all round. In use, press more heavily than with a diamond, which requires only very light pressure, and draw it across the glass in one rapid stroke. As a rule, the cut, or rather the crack that follows the cut, is fairly deep, sometimes extending right through the glass for a part of the length of the cut. If the wheel is a good one the line will not be splintered, but an indifferent wheel, especially if it is a thick one, will produce a lot of fine splinters, which have to be got rid of if we are cutting dry plates for use in the camera. An indifferent diamond, or a good one badly used, will do the same, and the chips sometimes cause pinholes on the negative. As the wheel requires pressure, the glass should always be supported on a pad of paper laid on a level surface, to avoid breakages; the pressure with a diamond should, however, never be enough to break the glass, and so a soft surface is not necessary.

## MEDICAL PHOTOGRAPHY.

BY NATHAN T. BEERS, M.D.

It is difficult to conceive of any branch of science in which photography is of more real service than medicine. And yet, it is rather surprising to note how few of our profession take serious advantage of this most valuable means of record. Radiographers, microscopists, and dermatologists long since found it an indispensable adjunct in their work, and many of our foremost workers in these lines have, of necessity, become expert photographers. In years past our medical journals contained but few illustrations and these usually were woodcuts from photographs or line engravings from crude drawings in pen and ink. At their very best they excited but little interest, mainly through their lack of truthful reproduction. But today, with the various processes of photography reduced to simple rules of thumb, the medical writer has no valid excuse for not illustrating such articles in which pictures would serve to elucidate the text. With the publisher, good photographs are always acceptable, and many a poorly written article is saved by the photographs which accompany it.

While admitting the advantages of and the necessity for pictures of interesting cases, the medical man, when pressed for his excuse for neglecting to obtain them, usually replies by saying that he knows nothing of the art himself and that his patients are seldom, if ever, willing to permit an outsider to do the work.

It is the purpose of this paper to encourage the physician in making his own photographs; not alone because the patient has the right to demand that he shall, but quite as much because of the simplicity of the processes used in the art today. Not only women, but often men, will object to having their objective symptoms photographed even though the physician be his own photographer, and a great deal of tact is at times required to gain the desired end; but to

suggest the employment of an outsider to do the work, almost invariably will be met with an indignant refusal and a probable loss of the patient.

When a patient submits to being photographed, he or she has the right to demand that the physician himself shall make the exposure; that he alone shall complete the processes of developing and printing; and that any or all features by which the patient might be associated with, or identified by, shall be eliminated from the negative. In making photographs in which the face of the patient must be included, it is best to defy identification by covering one or more features with a small mask of cloth or adhesive plaster. This procedure at the time of exposure usually suffices to allay suspicion and gain the confidence of the sitter, and is by far a better method than altering the image on the negative before printing. However, when the doctor does his own work, the patient is usually ready and willing to afford him every possible assistance and advantage.

The question which comes naturally to the lips of the novice in photography is: What shall I buy, and how shall I use it? I shall attempt to give as simply as possible such information as will serve to assist the medical man in the selection of his outfit, his supplies, and their proper use; and, if I speak plainly concerning the choice of apparatus and materials, it is hoped that the information will be accepted as a confidential, professional communication to a colleague, and not in any sense as advertising the product of one maker or another. Ten years' experience in medical photography and almost as many more in general amateur work have done much to establish certain preferences in my mind, and these I shall set forth boldly, believing that it is best to be plain spoken and frank in a paper of this sort, didactic as it must be, since it is intended for beginners.

Hand cameras, using film, have no place in this work. We must have a camera which will permit of very exact focussing and a tripod sufficiently strong to insure perfect rigidity. The camera should be 5 x 7 in size, using glass plates, and must have a good length of bellows to use in making life-size pictures of skin lesions, etc. Select one that is strongly built of well-seasoned mahogany; the initial expense is but a few dollars more than the price asked for the cheaper outfits made from soft wood and stained to represent mahogany, and which soon warp out of shape and usefulness. It is not necessary that it should be of the folding, leather-covered type; the ordinary view camera, selling around $20.00, will answer every requirement. With this is supplied one or more double plate-holders and a focussing cloth. I advise the 5 x 7 size because it is practically the smallest size available for this class of work; and then, being a standard size with professional photographers, the plates and materials are readily obtainable in a fresh state.

View cameras are sold without lens and shutter equipments, the photographer usually purchasing a lens to suit the class of work on which he is engaged. On the other hand, the folding camera is always equipped with lens and shutter, both of which are, generally, of fair quality, but of limited usefulness. I say of limited usefulness because the lens supplied is what is known as a rectilinear lens, and such a lens must be "stopped down" in order to yield a negative which is in sharp focus all over the plate. Crisp definition over the whole surface of a negative is known in the language of lenses as "flatness of field," and its absence in the work of cheap lenses is due to a lack of correction of the lens itself. Any lens, even the cheapest, will yield fair definition when "stopped down" to a point where only the very centre of the lens, the core,

transmits the light from the subject. But, should we attempt to use the same lens at wider apertures of diaphragm—apertures permitting of shorter exposures—then our troubles commence; the oblique or marginal rays from the object are brought to a focus foreign to, and usually in front of, the focal plane of the axial, or central, rays. The theoretical focal plane of such a lens would be saucer-shaped, and when we come to apply such an image, in practice, to our flat plate, the resulting negative shows distortion. To produce a lens capable of exact work at full aperture requires time, patience, and great skill. The glass itself, Jena glass, is specially made by a secret formula and every step in the grinding of the several lenses which compose the finished series is checked by tests too scientific and involved for me to understand, let alone to describe. Suffice it to say, that, after having seen the various processes employed in the manufacture of anastigmat lenses and the critical tests to which they are subjected before being offered for sale, I have never had the courage to question the price asked for these optical gems.

"The smaller the 'stop' used, the longer the exposure, the greater the depth of focus and the flatter the field," applies in the use of the ordinary lens more than in the anastigmat. With the latter, flatness of field is assured at full aperture, and where extreme depth of focus is not a positive requisite, the anastigmat may be used "wide open" to gain speed—a factor of enormous advantage to the medical photographer. Iris diaphragm openings, or stops, are marked by several different systems, but we shall concern ourselves with two only, those in general use in this country: The fractional or F. system and the uniform or U. S. system. In the F. system, the stop diameters are fractional parts of the focal length of the lens. Stop *f*/8, then, would indicate that the diameter aperture is one-eighth of the focal length of the lens, and this focal length is the distance measured from the diaphragm to the ground glass when the lens is focussed on infinity. The U. S. system is based on the focal ratio system and the markings give directly the relative exposure. In this system the aperture *f*/4 is taken as a unit of exposure and is marked 1; the next smaller opening, *f*/5.6, which requires twice the exposure, is marked 2, etc., each number representing the relative exposure necessary. If No. 1 requires one second, then No. 8 would require eight seconds. The two systems compare as follows:

| | | | | | | | | | | |
|---|---|---|---|---|---|---|---|---|---|---|
| F. system | 4 | 5.6 | 8 | 11.3 | 16 | 22.6 | 32 | 45.2 | 64 | 90.5 |
| U. system | 1 | 2 | 4 | 8 | 16 | 32 | 64 | 128 | 245 | 512 |

Depth of focus is that property of a lens by which objects situated at different distances from the lens are rendered sharp and clear in the resulting negative. Without going into scientific reasons for this, suffice it to say that the depth of focus is increased as the aperture of the lens decreases; as the focal length of the lens decreases; and as the distance of the objects from the camera increases. This depth of focus is the same in all lens of the same focal length and at the same aperture, regardless of cost. And so we observe that the real advantage which the high-priced anastigmat holds for our use is purely one of speed. But with our work speed is, perhaps, the most important factor, and so the purchase of an anastigmat lens is seriously to be considered by the medical photographer. We have seen by the foregoing that the largest aperture practicable in using the cheap lens is *f*/8. Larger than this yields distortion. But with an anastigmat working at *f*/5.6 or *f*/4, we may open the diaphragm fully and reduce our exposure twice or four times, respectively. Put this into practice with a fidgety patient,

with a child, or assume that we are working in a poor light, and the enormous advantage of speed becomes at once apparent.

I am frequently asked what lens I prefer. The question is a fair one, but it is hard to answer. It is like asking a doctor whose preparation of ergot or whose product of catgut he prefers. Each manufacturer does his best to put out the best preparation, and it is usually a mere matter of personal fancy. In a way, the same may be said of lenses. There are half a dozen manufacturers of high-grade lenses—Carl Zeiss, Voigtlaender, C. P. Goerz, Bausch & Lomb, and the Taylor-Hobson Co.—and a lens made by any one of these firms may be purchased without trial and with full confidence that it will perform its duty perfectly. Each photographer has his personal fancy and will advise you accordingly. My own personal preference is for the Cooke lens made by the Taylor-Hobson Company. For my medical work I use their lens of eight inches focal length working at an aperture of *f*/5.6. This make of lens has given me greater satisfaction than any other, and I believe it excels all others in flatness of field. Then, it is made up without cement being used between the glasses composing the series, and this assures permanence to the clearness and speed of the lens. It has been fairly well demonstrated that cement has little effect in reducing the speed or clearness of a lens during the first few years of its existence, but I am satisfied that oxidation eventually produces a tinge of color to the cement, which naturally tends to slow it. However, this color is, at most, trifling and the maker will re-cement the lens at small cost.

In the selection of a dry plate for our work, it is well to bear one or two points in mind. The difference in price between the good and the bad product is only trifling, but the difference in quality is wide. Make up your mind what plate is best suited to your needs, and stick to it. Don't blame the plate for your failures; I have used thousands of plates, and have had many, many failures, but never one which I could honestly blame to the plate maker. An orthochromatic, or isochromatic, plate is one which is prepared in such manner as to be able to render colors in their natural values. The ordinary plate is prone to exaggerate the brightness of blues and violets, and the deepness of reds, greens, and yellows. With us, the orthochromatic plate is a necessity.

Assuming that the outfit is purchased, the next point to be considered is how to use it. The question of a proper lighting, so important in portraiture, hardly enters here, since we usually have to make the best of our surroundings. If the pictures are to be made in a hospital where the operating-room is at our dispaposal, our task is an easy one. The patient should be placed in a quartering light—preferably one coming from the side and a little above the head—which will tend to throw into relief any lesions existing on the surface of the skin. When photographing patients at the office or in their homes, select a bright window, without sunlight entering, screen the lower third with some dark cloth or shade, and should the light be too strong, then cover the upper portion of the window with one thickness of plain gauze. This tends to diffuse the light and give softer renderings in the highlights on the skin and to make the shadows more transparent. If the shadows appear too deep, a white sheet held a few feet from the patient on the shadow side will reflect enough light into the shadows to brighten them. With some patients it will be necessary to use a head-rest of some sort to steady the head during a long exposure. I often find it advantageous to place very restless people flat on their backs on the

floor and by means of a tilting tripod top point the camera downward. This is an especially useful procedure when photographing the empty orbit, mastoid cavities, etc. This position is also advisable when making pictures of the eye, particularly so when there exists a constant flow of tears. It answers well in photographing skin lesions of the chest or abdomen, since whatever motion comes with breathing is parallel with the axis of the lens, and by stopping the lens down a mark or two the increased depth of focus will accommodate it. The photographing of specimens is much simplified with the camera in the vertical position, as it does away with pinning the specimen to a board, dripping of fluids, and motion during exposure.

A small hand mirror is useful at times to throw additional light into cavities and to increase the illumination of bloody or reddish areas in pathological specimens. A short time ago I wasted a dozen or more plates in an attempt to photograph an empty orbit, and until I thought to make use of this means to properly light the cavity, I was assured of nothing but grim failure. It was almost an impossibility to give sufficient exposure for the dark reds of the orbit and still preserve any quality in the surrounding tissues; but, by attaching a small mirror to the leg of the tripod, I was able to direct a shaft of light into the cavity and so gain a result impossible by any other means.

Of all the problems in photography, that of proper exposure is the most difficult. One by one the other problems—developing and printing—have yielded to scientific experimentation and have been reduced to mechanical processes, simple in practice and sure in result; but exposure, depending as it does so much upon constantly changing factors, must always be reckoned with. Exposure meters and exposure guides are valuable in their place, and this is usually out of doors, but for our work they are of but little assistance and then one is liable to get into the habit of relying too much upon them. I know of no better way for the amateur to gain a definite knowledge of exposure than by the old method of experimentation. It may cost him a dozen or two of plates, but the information gained in this practical way is worth more in the end than he will at first admit. The plates saved from utter failures by the guess method soon replace those lost in his experimentation, and he always has some definite knowledge in mind as to the proper exposure required in his work. The method is simple. Assuming that the plate-holders are numbered, we have but to place our subject in the position selected in our office, request that he remain as still as possible, and, after making a note of the light outside (whether it be bright sun, hazy sun, dull, or very dull), we make three or more exposures under exactly similar conditions, save for length of the exposures. Each exposure is noted down on a slip of paper opposite the number of the plate-holder, and when we remove the plates from the holders for development it is a simple matter to mark with a lead pencil the corresponding number on the corner of each plate. With a fairly bright light outside and the subject sitting within six feet of a window properly shaded with a diffusing screen, our lens stopped to *f*/8, our first exposure should be four seconds, the second eight seconds, the third twelve, the fourth sixteen, and the fifth twenty seconds. With a lens corrected to work at an aperture of *f*/5.6, just half of these exposures would produce the same results, since the area of the opening at *f*/5.6 is just twice that at *f*/8. Our plates are then unloaded in the dark-room, and in a dim red light properly numbered. Our plate-tank is filled with developing solution, the plates placed in the rack, and the rack slid

gently into the tank. When the development is completed at the end of twenty minutes, the plates are washed and fixed, washed again, and then allowed to dry. To the initiated it is a simple matter to pick from these test negatives the one showing the best exposure. It will have a fair density in the highlights and detail in the shadows. But the novice had best make a print from each negative and then compare them all together, selecting the one which answers best for his purpose. Or, if he is in doubt, any photographic friend, or almost any professional photographer, will be glad to select the best exposure from the five negatives. If it should be the negative marked No. 3, then we find on consulting our record slip that we gave it twelve seconds, and this speed should be borne in mind for future use on similar subjects in a similar light with the lens stopped to *f*/8. And from this exposure taken as a standard, it is a simple matter to figure out the proper exposures for larger or smaller stops. For example, with the same conditions of light, and taking twelve seconds as a standard for an aperture of *f*/8, then a stop of *f*/5.6 would require but six seconds, while one of *f*/11 and *f*/16 would require twenty-four and forty-eight seconds, respectively. The condition of light may be reckoned with as follows: Bright sunlight, one; hazy sunlight, two; dull light, cloudy, three; and very dull, four times the exposure. It may be necessary at times, when photographing children or a very nervous patient, to sacrifice everything for speed. If the light is hazy, which would double the exposure at *f*/8, we simply open the lens to *f*/5.6, thereby doubling the aperture and consequently halving the exposure. Another means occasionally very useful is to use a very rapid plate, such as the Lumière sigma, which has easily twice the speed of the other fast plates generally in use. With this plate it is possible to further cut the exposure by about one-half.

To sum up, then, assuming that we have determined the exposure necessary for our subject to be eight seconds, with an ordinary plate, the lens stopped to *f*/8, and a bright light outside, we may shorten our exposure to four seconds by using a sigma plate, and still further shorten it to two seconds by means of a fine lens capable of being opened to *f*/5.6.

There was a time when developing was a source of worry and a bugbear to the amateur. But that time has passed for good and all, and the novice is placed upon the same footing with the experienced professional in the use of the developing tank. This is a simple box of nickel-plated metal with a water-tight cover and a basket or rack with divisions into which the plates are placed, in the dark-room. The tank is filled with a definite amount of water at a definite temperature, definite amounts of chemicals are added, and the rack containing the plates is lowered into the tank and allowed to remain for a definite length of time. There is nothing left to the skill or judgment of the operator, even a child can produce a negative equal to that of the oldest professional. When the time is up, the rack is removed, the plates fixed, washed, and dried.

The other method is known as the factorial method. It consists in using a developer having a known factor (this factor is usually printed with the formula by the plate-maker in his direction slip enclosed with the plates) and by timing the development from the pouring on of the developer to the first appearance of the highlights; this time, in seconds, is multiplied by the factor, and the product is the length of time which must elapse from the pouring on of the developer to the removal of the plate from the bath. It is a very simple method and is useful when but one or two plates are to be developed.

The use of the plate-tank is properly and exhaustively treated upon in the booklet which accompanies each tank, and I shall confine myself to the technique of the tray or hand method of development. With each box of one dozen plates is enclosed a slip on which the manufacturer sets forth a series of formulæ best suited to his plates. It is always best to follow these directions in making up solutions, using the developer recommended by the plate-maker and using it exactly as directed. For instance, in the Seed Company's plates the slip enclosed gives a series of half a dozen formulæ, and of these we select two for our work. The first is the standard pyro formula, which has been in use the world over for many years; the second, a combination of metol and hydroquinone. The former is given to staining the finger-nails if used constantly, while the latter has a tendency with many people to create a very troublesome dermatitis. However, neither will give trouble if properly used and the fingers kept out of the solutions as much as possible.

**Pyro formula, Seed's:**

Solution A.

| | |
|---|---|
| Pure water | 16 ounces. |
| Pyro | 1 ounce. |
| Oxalic acid | 10 grains. |

Solution B.

| | |
|---|---|
| Pure water | 16 ounces. |
| Sodium sulphite, dry | 2 ounces. |

Solution C.

| | |
|---|---|
| Pure water | 16 ounces. |
| Sodium carbonate, dry | 2 ounces. |

The sulphite of soda and the carbonate of soda used should be the dry or anhydrous chemicals. To use the formula, we take 1 ounce of each solution and add 7 ounces of water at a temperature of about 65° F. The factor for this formula is 12.

**Metolhydroquinone formula. Seed's:**

Solution A.

| | |
|---|---|
| Pure water | 32 ounces. |
| Metol | 60 grains. |
| Hydroquinone | 60 grains. |
| Sodium sulphite, dry | 1 ounce. |

Solution B.

| | |
|---|---|
| Pure water | 8 ounces. |
| Sodium carbonte, dry | 1 ounce. |

To use, take 2 ounces of A, ½ ounce of B, and 2 ounces of water.

The factor is 15.

The plate manufacturers all publish little booklets which deal very exhaustively with development, and it is wise for the amateur to secure one of these books for reference and suggestions.

Having mixed our solutions in a graduate or tumbler and placed it conveniently at hand beside our tray, the room is darkened and the ruby lamp lighted. The plate is taken from the holder, dusted with a camel's-hair brush, and placed face up (dull side is the face) in the tray and the solution poured over it with a full sweep, so that no bubbles may form. The tray is rocked gently, and we start to count seconds until the first signs of the image appear on the plate This is easily accomplished by hanging or placing the watch or clock near the red light Starting at the time when the second hand reaches "60," we rock the tray until the first signs of the image appear. Let us assume that we note the first signs at twenty seconds past, then we multiply our factor, which is twelve, if we are using the pyro solution, by twenty, and we have two hundred and forty. Then, at the expiration of two hundred and forty seconds, or four minutes, the time being taken from the pouring on of the solution, we remove the plate from the bath and, after giving it a thorough rinse under the tap, place it in the fixing bath, which is made up as follows:

A.

| | |
|---|---|
| Water | 24 ounces |
| Sodium hyposulphite | 8 ounces. |
| Sodium sulphite | 160 grains. |

B.

| | |
|---|---|
| Water | 8 ounces. |
| Citric acid | 2 drams. |
| Alum | 2 drams. |

When dissolved, pour B into A, stirring briskly.

This fixing bath keeps nicely and may be used for negatives and prints until exhausted, a matter of a week or two at least. The developing solutions should always be discarded after use.

When the plates go into the fixing bath, the reverse side shows a silvery whiteness, and until this whiteness has entirely disappeared from the back they should be allowed to remain in the bath. When this has entirely disappeared the plates may be lifted and should be washed under a gentle stream of water from the tap for at least twenty minutes, when they may be stood on end in a current of fresh air to dry.

Having accomplished the first stage of our work, the making of the negative, it remains for us to make a positive print on paper, the completion of the process.

The day of solar printing, with its tedious processes and uncertain results, has passed, and the photographer may make his prints at any time, either day or night. The requisites are a few sheets of Cyko or Velox developing-out paper (also known as gaslight paper), a bottle of ready mixed developer, and a fixing bath. The fixing bath used for negatives answers nicely if fresh and clean. The paper is made in several surfaces and two grades of rapidity. For very thin or flat negatives, or where contrast is desired in the print, the "regular" Velox or the "normal" Cyko is to be selected. But for average negatives, those with a fair amount of density, the "special" Velox or "contrast" Cyko will be required. The negative is placed glass side down in the printing frame and a sheet of the sensitized paper laid in contact with the film surface of the plate. The back of the frame is clamped in place and the frame held about seven inches from a gas burner, lamp, or electric light for a period of five to twenty seconds, according to the density of the negative, the intensity of the light, and the grade of paper in use. "Special" and "contrast" papers requiring but half the exposure of "normal" or "regular" grades. The print is then immersed in the developing solution until the picture is developed up to the density desired, when it is given a quick rinse in clean water and transferred to the fixing solution, where it remains for half an hour. Then the print is washed for an hour in running water and hung up to dry. When prints are to be used for reproduction and the greatest amount of detail is desired, the glossy surfaced papers should be used. These papers dry with a good gloss, but this gloss may be increased to a perfect glacé by "squeegeeing" the print while wet on to the polished surface of a ferrotype tin. When thoroughly dry the print detaches itself or may be peeled off by raising one corner with a knife blade.—*New York Medical Journal.*

## ANATOMY IN PORTRAITURE.

THE study of anatomy in relation to retouching and posing is not given the attention by professional photographers it deserves. Is a knowledge of the anatomy of the human body of any use to the portrait photographer? I have no hesitation in saying that it is not only of use, but that it becomes an absolute necessity if anything really artistic is the aim of the photographer, be he amateur or professional. How many amateurs who consider their results in portraiture

passable, how many professionals who devote their life's work to that subject, know anything at all about this anatomy? I don't mean the names of the different parts of the body; a mere list of these is of no use by itself. What I mean by anatomy is the requisite amount of knowledge in the subject that a portrait painter must possess before he attempts to paint a portrait. Let us look for a little at the training he undergoes. On entering an art school he first studies the antique, making drawings in light and shade from casts and statues of recognized artistic merit. He afterward begins to study the anatomy of the figure in one of these statue drawings, putting in first the bones in their proper position, according to the pose of the figure, and afterward clothing these bones with their covering masses of muscle. The bones are each studied separately, and drawings made from them. In a similar way the muscles get the same treatment, each muscle being studied so as to render clear its relation to those near it, its origin and ending, its functions, and the various shapes it can be made to assume, when quiescent or brought into play. The next stage is drawing from the life models, still in black and white, but the artist has now a clear idea of the underlying formations which cause the highlights, half-tones, and shadows in his drawing. Proficiency in this is followed by the use of colors instead of black and white, but even when advanced in color work, his primary idea is still to render correctly the anatomy in his study. Thus we see how important a part anatomy plays in the work of a portrait painter.

Our present-day artists—well known and less well known—have each undergone this essential training. A close study of the work of the old masters reveals the fact that they have also had a knowledge of the anatomy of the human body. They have depicted merely the outward semblance of their sitters, yet, as they painted they never for a moment seem to have forgotten that under that fair skin, or under that wrinkled brow, there existed this wonderful framework of bones, this equally wonderful arrangement of masses of muscles and, most wonderful of all, that subtle power that gave life and movement to the whole bodily structure. Look closely into the subject, and you will be forced to confess that their greatness lay in their ability to make you see and feel the presence of these things in their work. What has all this got to do with portrait photography? Can sufficient analogy be traced between these two branches of art to lead us to suppose that at least a modified course of anatomical study should be a necessary part of the training of a professional photographer? Well, the finished work of the latter also shows only the outward semblance of the sitter. His aim likewise is to present this in as artistic a manner as he knows how; but, of course, the means of doing so are totally at variance in the two cases. The opening of the shutter in the camera for a second or so, and that mysterious perfection known as an instantaneous plate, now possesses in a latent form the image of the sitter. All the drawing, all the anatomy, all the various other things that make an artistic picture portrait are caught by the plate during that brief glimpse, which corresponds to days' and weeks' work with the artist. How immeasurably in point of time is the mechanical process the superior; with what ease and certainty do we get an exact presentment of the appearance of the sitter at the time of exposure, simply by developing up this latent image! Now, suppose we examine a negative that has been exposed and developed by an average amateur. The chances are that all finer anatomical lines of the face, neck, and bust have been developed into that blackness in the negative so dear to

the heart of the amateur—the resulting prints, of course, possessing little or no artistic merit. On the other hand, if the professional had exposed and developed the same plate, he would, as a rule, have avoided that mistake, as experience has taught him the amount of depth requisite in correct development. At this stage the negative will certainly show several things that require elimination, but it will also possess those numerous anatomical lines and shades already mentioned, be the lighting what it may. The negative is now given to the retoucher, and it is here, as a rule, that the anatomy meets its fate. Wrinkles, incipient and full-grown, freckles, probably invisible to the eyes of anyone looking at the sitter, disappear under the magic strokes of the pencil; but under the same strokes disappear those little anatomical lines and shades, so full of meaning to the anatomist, and the negative is now ready to be printed from. Of course, the print is now a thing of beauty, showing a figure with smoothly rounded cheek, brow whereon never scowl sat, marble-like neck, and other little touches of a similar kind. What a travesty! Are we to suppose that his clientele look to the photographer to tone down any little asperities and those anatomical shades that give life and expression to their portraits, whereby they may be made to look younger or milder looking? Might it not, on the other hand, be the fact that the retoucher is not sufficiently well grounded in his subject to differentiate between essentials and non-essentials in the anatomy of the figure he is working at; or, again, might it not be that he retouches a little too much mechanically, as if the figures in every negative did not possess individuality? Perhaps you may think that all this is exaggeration, but an afternoon spent in studying seriously the prints in professional photographers' showcases and windows in a city will show how little exaggeration there is. There are fortunately some professionals who seem to be quite aware of the fact that to make picture portraits the essential anatomy in the figures of their models must be expressed. The showcases of these will be found to contain prints that are well worth studying and using in high standards for our emulation. The greater number of showcases, however, do not even approach an artistic standard, as far as the prints in them are concerned. We probably find an elaborately got-up showcase filled with artistic mounts, having beautifully finished prints mounted thereon; but, alas! these won't bear the scrutiny of the eye of the anatomist, as faint traces, at most, are all he sees in looking for what he considers as essentials in the pictures.

A little thought will convince you that this state of affairs is worth rectifying; and this could probably be done at little inconvenience to the photographer. The best thing to do, for such as see the force of these ideas, would be for them to take at least a modified course of anatomy in a school of art where this subject, taught in a form suitable to our purpose, is generally to be found in the curriculum. When this is done, the student will be astonished at the faulty nature of a great number of the photographs he comes across; faults which, previous to his training, would have been passed over quite unnoticed by him. It would be too much to expect that everybody who took portraits should find it convenient to take this course, but there are other things at hand whereby a little help could be got on the subject. Statues and portraits in picture galleries would probably be the next best thing to study, and there the observant photographer will find that the artists who created them were not backward in expressing the anatomy in their studies.

## STUDIO ACCESSORIES.

THE professional photographer, desirous of holding his position, keeping in the front ranks, and making his business a paying concern, must keep constantly before him the state of his studio accessories. Portraiture is primarily a matter of dress, and secondly of furniture. The sitters do their part in appearing before the camera adorned with articles of attire adapted to the momentous occasion, the photographer having thrust upon him the duty of providing an environment which shall not spoil the effect his clients desire to produce for their own satisfaction and the edification of friends.

### *The Luxurious Style.*

It is sometimes urged against the portraiture of our leading professionals that the furniture is too profuse, occupying as large a portion of the stage that the sitter becomes merely a detail, an afterthought, put in to supply the human element in a picture, which might be appropriately labelled: "Interior, with Figure." To the photographic purist, the "Art for Art's sake" man, this criticism may appeal; to the man of business it will be made in vain, being summarily dismissed as of no practical worth. With this view we entirely agree, confessing to some regard for a portrait containing a well-arranged selection of accessories. The photographer must please his clients, and when these are drawn from the upper classes—persons living in homes richly furnished—they require a portrait photography in harmony with such surroundings, desiring works having the air of wealth, of luxury, and it is thus in the interests of trade to meet the demand. In doing so the photographer violates no principle of pictorial representation, for in all times the artist has depicted his sitters in association with the things of their daily life—all artistic sentiment being against a duchess in a dairy or a dairymaid in a drawing-room.

### *The Conventional.*

While it is necessary to keep the accessories in harmony with the social position of the sitter, it should not be overlooked that all classes are susceptible to a certain amount of flattery in this connection, being more pleased with a portrait giving them a social standing above, rather than below, that which they really occupy. In all cases the photographer, whatever may be the class that gives him patronage, should be in advance, having accessories of a more expensive and luxurious nature than his customers are likely to possess. Only in this way can he apply this very subtle form of flattery. He already flatters the features by retouching, and this latter device is flattery to the dress. In working along these conventional lines a difficulty of a technical character will arise, needing attention to be overcome. The furniture designed for household decoration is inconvenient for studio use, not lending itself readily to photographic methods of composition and posing. It is too angular, possesses awkward scrolls, quite preventing the subject being brought close enough for securing a good effect. A small knob is sufficient to separate the sitter from a chair or table, creating a lack of unity in the composition, making it a picture of two objects in place of the simple design intended. Photographers who have experienced this drawback are constantly on the watch for any article combining a good design with utility in studio practice, in this way renewing their stock. Attempts have been made

in supplying accessories to suit professional purposes, not with much success, for, while quite adapted to that end, they diverge too much from domestic patterns. In a picture looking what they are—quite photographic. There is here a want yet to be supplied, a field is open for the furniture designer, who is able to combine photographic utility with a pattern neither grotesque nor unusual.

*The Plain and Simple.*

In general, professional portraiture must be conventional, the usual thing, the photographer, whatever may be his own desires or aspirations, being compelled to meet the demands of the public taste. In particular localities, however, a class exists who will patronize work departing entirely from popular notions. Novelty attracts, and the man with a strong personality can impress the public, lead them to support him, and acquire a taste for his own individual style. An effective portraiture will follow from discarding all accessories and paying close attention to expression, lighting, posing, and drapery. Mrs. Cameron was one of the earliest of these unconventional types, though since her time others —such as those who model their work after the paintings of Rembrandt, Gainsborough, Reynolds, or Velasquez—have met with success. To abolish accessories is to give added importance to the background. It becomes the chief study, requiring every attention to make it harmonious with the style of the subject. It is for this reason that the above-mentioned painters have been so closely copied by the Cameronian type of photographer. To some tastes this simple portraiture is very agreeable, and, with the right man, and a fitting neighborhood, enough patrons are secured to make it commercially profitable. A few can even go beyoud it, with work that approaches to the "soul studies" characteristic of Watts. Mere sketches and suggestions, in place of the clear, sharp, well-defined photograph. However interesting these productions may be, in the present state of public taste, the demand for them must remain strictly limited, and the majority of professionals could not insist on supplying such work to their clients and still retain a profitable connection. From a financial point of view it would be a distinct gain if expensive accessories could be abolished, since the charge on a business which they entail, not only in purchasing, but in keeping in good condition, would go with them. This was impressed on us upon once visiting the studio of a photographer of this class, a well-known man, whose work is much appreciated; beyond a few backgrounds, painted by himself, some drapery and screens, his accessories were only of a nominal value. A scanty outfit, calling for little expenditure, reducing the cost of working expenses to a minimum, is a consideration when competition is so keen as nowadays, anything tending to keep down expenses without reducing efficiency being money saved. Here the business man must study his public, for it will economize his resources if he can rely on clients who are satisfied with a portraiture of the simple kind.

## NEW BOOKS.

*The American Annual of Photography*, 1911. 328 pages, illustrated. Paper cover, 75 cents; postage, 15 cents. Library Edition, $1.25; postage, 20 cents. GEO. MURPHY INC., New York, sales agent.

Our only American Annual has now reached its twenty-fifth volume and keeps on improving from year to year. Its contributors and illustrators make up a list of our best known photographic writers and picture makers. The articles, most of them illustrated, cover the whole range of practical photography, from "Air Bubbles" to "Waxing Solutions," not forgetting the section devoted to formulæ, weights and measures, etc. The illustrations offer a splendid variety and are unusually well printed and good examples of halftone printing. The frontispiece is a print on Buff Cyko from a negative by E. E. Doty, of Battle Creek. It is a splendid picture and shows off the Buff Cyko to great advantage. Many of the articles have a direct bearing on professional photography, and with its wealth of illustrations, it is a splendid book for your reception room after you and your assistants are through with it. The editor, who does not disclose his identity, is to be congratulated on so good an annual.

*The British Journal Photographic Almanac and Photographer's Daily Companion*, 1911. Edited by GEORGE E. BROWN. 1348 pages. Paper cover, 50 cents; postage, 27 cents. Cloth binding, $1.00; postage, 37 cents. American agents, GEO. MURPHY, INC., New York.

This is the Jubilee Issue of our old friend and daily companion. Age cannot wither or custom stale its old-time popularity, and the *Almanac* is again backed up and supported by its noble army of advertisers, six hundred and sixty-nine pages strong, printed on paper of every hue. An interestiny feature of this volume is the history of the *Almanac*, told by the present editor, with which is reproduced a reduced facsimile of the first *Almanac*, issued in 1860, which consisted of a large sheet. There is an epitome of progress covering the events of the year; new apparatus and equipment, illustrated and described; negative, color, and printing processes; developing formulæ; miscellaneous information, tables, etc., and an obituary of the year. It is a volume that no self-respecting photographer should be without, indispensable as a reference book, and the greatest value for fifty cents ever offered.

"*The Lens Part of Photography.*" By R. D. Gray. A Brief Discussion of the Principles Involved in the Practical Applications of Lenses in Photography. With eight halftone illustrations and thirty diagrams.

It is often said in a deprecatory way that technical books are too often written by people who lack practical experience in the subject about which they write. This certainly does not apply to "*The Lens Part of Photography*," which is written by R. D. Gray, a practical optician with thirty years' experience in lens making behind him. The few books on lenses written by opticians have been largely theoretical and concerned with the finer points of mathematical optics. This little handbook, however, is wholly concerned with lenses from the user's point of view. It is an honest endeavor, by a lens maker, to clear away the confusion which besets the average man in reading lens catalogues. To tell just what part the lens plays in the making of the photograph, and how to select and use photographic lenses to the best advantage.

After treating simply of the properties of simple lenses, the author classifies all lenses with regard to the chief requirements in practical use: first, as regards speed; second, in regard to definition; and third, with regard to the angle of view included by the lens. This is followed by useful chapters on testing lenses, giving a simple method and discussing the different aberrations and errors which the test of a lens may discover. The important question of focus

and focussing is treated with unusual clearness, and a table is given showing the depth of focal field with a lens of 5½ inches focal length at different apertures. It is often desired to know whether a certain lens can be used in a camera of limited dimensions and can be folded within a camera for transportation. This question Mr. Gray answers by giving a sheet of diagrams showing most of the lenses in the market reproduced half size. This is a very useful feature and will be appreciated by lens buyers and users. Chapters are also given on the camera, the optics of copying, portraiture, telephoto lenses, shutter efficiency, and the photographing of tall buildings without a ladder, and hints to purchasers of lenses. The diagrams throughout the text make things altogether clear and there are two tables for the easy computation of view angles and for enlargement and reduction.

Altogether, this little work is one which we can recommend with pleasure, as offering more information in a small space than any other similar handbook. 58 pages, paper covers, 25 cents. Sold by all dealers. Trade agents, TENNANT & WARD, New York.

## TRADE NOTES.

HIGH-GRADE lenses and high prices usually go together in the popular mind. It does not follow, however, that a high-grade lens must be marked at a very high price to guarantee its quality. A lens that has been gaining a reputation for good work, and which is sold at a moderate price, is the Sylvar lens, put on the market some few years ago by G. Gennert. It is a highly corrected anastigmat lens, working at $f/6.8$, and is guaranteed to cover the plate listed at full opening, giving sharp clear images—as sharp at the edges as at the centre. It is a symmetrical lens; each half is a perfect long-focus lens. It can be used as a wide-angle lens, and, when stopped down, a short-focus lens, covering a large plate. The Sylvar is an inexpensive lens, costing about 40 per cent. less than similar lenses of the same power, and is giving satisfaction wherever used. Send for a price list—it will interest you. Address G. GENNERT, 24 E. 13th St., New York.

---

THE new "Agfa" book of *Photography by Flashlight*, issued by the Berlin Aniline Works, 213 Water St., New York, is just out, and is a valuable addition to the literature on flashlight photography. Mr. Barrows, of the photographic department of the Berlin Aniline Works, has put together a wonderful lot of flashlight information. Those photographers who have the "Agfa" *Book of Formulæ* will know just how good a book to expect. It is a book for every photographer. The price is twenty-five cents, but if you mail a label from "Agfa" Flashpowder and ten cents, a copy will be sent you. It's big value for a quarter.

---

IN order to better serve photographers in the Northwest, the Defender Photo Supply Company has established a branch house in Minneapolis, located at Reid corner, Ninth Street and Nicollet Avenue. Commodious quarters have been secured here, especially adapted for the purposes of a supply house. The new branch will enable the Defender Company to reach the great section of the country adjacent to Minneapolis more quickly than ever, and this company has always enjoyed a reputation for making prompt shipments.

Photo. by HOWARD, Minneapolis.

Mr. R. D. Seeley, the manager at Minneapolis, comes from the New England Furniture Company in that city, where for a number of years he has had charge of the photographic department. He brings with him to his new position a wide acquaintance among photographers and a mastery of photography in its various branches.

# WILSON'S PHOTOGRAPHIC MAGAZINE

A MONTHLY MAGAZINE FOR PRACTICAL PHOTOGRAPHERS

Founded in 1864 by EDWARD L. WILSON

MRS. EDWARD L. WILSON, Publisher and Proprietor

T. DIXON TENNANT, Editor

EDWARD L. WILSON, 122 EAST TWENTY-FIFTH STREET, NEW YORK

*Entered at New York Post-office as Second-class Matter*

Yearly subscription in advance, United States and Mexico, $3.00; Canada, $3.25; Foreign Countries, $3.50. Single copies, 25 cents. Subscriptions begin with current issue unless otherwise ordered. Original manuscripts on photographic subjects are solicited, and, if accepted, will be paid for on publication.

## EDITOR'S TABLE.

DECEMBER 29, 1910.

*Editor* WILSON'S PHOTOGRAPHIC MAGAZINE, *New York, N. Y.:*

MY DEAR SIR.—In a recent issue of a photographic journal published in New York, the statement was made that I am connected with a new developing paper factory in Cleveland, and also that I am identified with the advertising department of the Eastman Kodak Company. As there is not an atom of truth in either statement, you will be doing me a great favor if you will find space in your valuable journal for this denial.

With best wishes for 1911, I am,

Sincerely yours,

J. C. ABEL.

---

THE Professional Photographers' Society of New York has voted to change the date of its annual meeting from the first week in April to the middle of February, and will hold their next annual meeting on the 15th, 16th, and 17th of that month, at Terrace Garden, New York. One of the great attractions of this convention will be a print exhibit from seventy-five of the leading photographers in Germany. The Executive Committee will request from our members two prints, making the print exhibit a great educational feature. One afternoon will be given to studio demonstrations by some of our celebrated photographers. Arrangements are being made to have a series of interesting talks and demonstrations at the convention hall, and President Bliss assures us that every moment of the three full days of the convention will be overflowing with practical interest to every photographer who attends.

---

THE fourteenth annual convention of the Photographers' Association of New England will, for the first time in the history of the Association, be held outside of Boston. Bridgeport, Conn., is the city selected for the experiment, and Bridgeport promised to make it a success. The meeting will be held late in September or early October (the last few meetings have suffered from too much warm weather). The Armory, with its 14,000 square feet of floor space, and good illumination, ought to prove acceptable to all exhibitors. There will be no prizes awarded, but an Interstate Class will be passed upon by a jury and honorable mention given. The Mayor of Bridgeport, also the secretary of the Business Men's Association, the editors of the several papers, and the local photographers, are very enthusiastic over the prospects of a large gathering of the craft from New England, and expressions given by the leaders in New York, Philadelphia, and the Eastern and Middle sections warrant a large attendance from those cities, and by the P. A. of A.. Being held so far away from this vicinity, we believe the attendance will be largely increased. It is proposed to make practical educational demonstrations a most important feature of the meeting.

---

BEGINNING on January 16, Mr. W. S. Lively will give a special course for professional photographers on his method of Lightings, at the Southern School of Photography, McMinnville, Tenn. The course will last for a week, and the work is laid out in a very systematic manner, which, with Mr. Lively's well-known special aptitude for teaching, guarantees to each student a very sure improvement in his work regardless of his previous standing in professional photography. McMinnville is a delightful place for the winter season, so you would do well to pack your grip and take a useful vacation with Mr. Lively's special class. We cannot recommend the Southern School of Photography too highly for sound practical photographic teaching.

---

THE Professional Photographers' Association of Scotland—the equivalent of our P. A. of A.—held a meeting recently, with Wm. Crooke presiding, who, by the way, is now visiting in this country. Among other things of interest to the craft—an album—was shown, into which mounts could be fastened. The benefit of such an album would be to keep unframed photographs clean. It was pointed out that this would stimulate business, as anyone possessing such an album would naturally desire to have it filled and ask their friends for photographs. The size of mount thought most suitable was 7½ x 11 inches. This plan was tried by the Rochester section of the P. P. S. of N. Y. with some success.

Copyright, Falk, N. Y.

DR. EMANUEL LASKER
(Chess Champion of the World)

By B. J. Falk, New York

*From American Annual*, 1911

# WILSON'S

# PHOTOGRAPHIC MAGAZINE

FOUNDED IN 1864 BY EDWARD L. WILSON

VOL. XLVIII FEBRUARY, 1911 No. 650

## SIXTY DAYS BEFORE EASTER.

WITHIN sixty days the great spring festival of Easter will be here. It is a season that should bring lots of new business to the photographer.

It's the opening up of the bright days and marks the change from the indoor winter life to the open air summer life.

The heavy expenditures of Christmas time are forgotten or evened up and we begin to look around for a fresh excuse for spending our surplus cash. Possibly it's the season when the milliner and the mantle maker, the tailor and the hatter reap their greatest harvest. It is also a splendid time for the photographer, and he should begin now to prepare for the harvest.

During the quiet days of February go through your list of customers—always remembering that a bird in the hand is worth two in the bush, look up the people who had photographs a year ago, and if they have not had any duplicates, this is an opportune time to remind them of the fact and draw attention to the later printing papers and suggest a few prints in something other than you supplied on the original order. Offer Eastman Etching Sepia if they have already had black and white prints, or if the original order was sepia, suggest the pleasing qualities of a rich black and white print on Professional Cyko or Triple A. Defender stock. There is no end of variety in tone texture, grades, and prices.

The same bright season that brings the new leaves and blossoms to the trees just as surely brings a great desire to the human to bedeck him or herself in new clothes, then the photographer has a splendid chance to take advantage of one of human nature's weaknesses—vanity. A new outfit will often spur the procrastinator to make the long promised visit to the studio. Get in your reminder, so that it will be your studio.

Then there are the babies. There will be a fine new crop of them, with proud mothers just waiting for the first fine sunny days, when baby can be taken to the studio without too much risk. Get up a good display of baby pictures for the showcase. The birth columns

in your local paper for the last few months will give you a good mailing list for a circular letter on baby pictures—their beauty and desirability.

A list of recent engagements will also be well worth working to meet the demand for photographs that the two families exchange.

These are but a few of the many methods the photographer with time on his hands can take up; others, of course, will suggest themselves. The thing to do is to start right now and not wait until it is too late. Sixty days is not a long time, and it does not allow you to sit and think too much.

## REPORT OF THE EXECUTIVE COMMITTEE OF THE PHOTOGRAPHERS' ASSOCIATION OF AMERICA.

St. Paul, Minn., Jan. 18, 1911.

At the call of President G. W. Harris, the Board of Officers of the Photographers' Association of America met in Executive Session at the Saint Paul Hotel, in St. Paul, Minn., on January 12. There were present: G. W. Harris, of Washington, D. C., President; Ben Larrimer, of Marion, Ind., First Vice-President; C. F. Townsend, of Des Moines, Iowa, Second Vice-President; M. W. Tyree, of Raleigh, N. C., Secretary; L. A. Dozer, of Bucyrus, Ohio, Treasurer.

The Treasurer handed in the following financial report:

Summary of Treasurer's Account for 1910.

*Receipts.*

| | | |
|---|---|---|
| Cash on hand Jan. 1, 1910 | | $6,483.22 |
| Received from memberships and dues . . . | $3 284.00 | |
| Received from Chicago Day buttons . . . | 114.50 | |
| Received per capita tax affiliated societies . . | 296.00 | |
| Received per capita tax affiliated societies (1911) | 62.00 | |
| Received from sale of ladies' pins . . . . | 116.50 | |
| Received from sale of background, membership list, etc . . . | 15.00 | |
| Received from sale of space in Convention Hall . . . . . | 3,125.00 | |
| Received from advertisers in *Annual* . . . . | 1,150.00 | |
| | | 8,163.00 |
| | | $14,646.22 |

*Expenditures.*

| | | |
|---|---|---|
| Paid out on vouchers Nos. 933 to 1021, inclusive . | $7,613.53 | |
| Cash on hand Jan. 1, 1911 | 7,032.69 | |
| | | $14,646.22 |

President Harris appointed Messrs. Townsend and Tyree as an Auditing Committee to pass on the Treasurer's and Secretary's books. The Committee reported that the books and vouchers were in order, and their report was accepted by the Board. President Harris then appointed the following committees: Hotels, Mr. Larrimer; Decoration, Mr. Tyree; Official Button, Mr. Dozer. Association Annual: Messrs. Townsend, Dozer, and Harris. Entertainment: Messrs. Dozer, Larrimer, and Townsend. Press: Messrs. Tyree, Larrimer, and Harris. Transportation: Mr. Townsend. Printing and Advertising: Messrs. Tyree, Dozer, and Harris. Information: Messrs. Larrimer, Townsend, and Tyree.

A Local Entertainment Committee was appointed.

The Chairman of Committee in each instance is the first name mentioned.

Various suggestions and matters pertaining to the conducting of the 1911 National Convention were formally discussed, and the following resolutions were adopted unanimously:

First.—That the offer of the city of St. Paul of the free use of the St. Paul Armory be accepted, with the hearty thanks of the Board.

Second.—That the week of July 24 be the date of the National Convention of the P. A. of A. for 1911.

Third.—That the 1911 convention shall open officially on Monday afternoon, July 24, and shall be held from Monday to Saturday morning, inclusive.

Fourth.—That the Association *Annual* be published as usual, and arrangements be made to that end.

Fifth.—That every professional photographer in America is invited to send an exhibit of pictures, not to exceed three in number.

Sixth.—That a School of Photography, on a plan to be made public hereafter, shall be held during the term of the convention, in the St. Paul Armory.

Seventh.—That no prizes shall be offered this year.

Eighth.—That the Third Annual Meeting of the Congress of Photography be called to meet during the convention, and that the proper officer be authorized to issue the call for delegates from the State Associations affiliated with the P. A. of A.

Ninth.—That the sum of three hundred ($300) dollars be set aside to cover the expenses of the Federation of Women Photographers incurred in preparing their exhibit at the P. A. of A. Convention and increasing the membership in the Federation.

Tenth.—That other features for the instruction and entertainment of the members of the P. A. of A., such as lectures, demonstrations, etc., be duly provided for, according to the plans laid down at this meeting.

Eleventh.—That the Saint Paul Hotel, in St. Paul, Minn., be made the official headquarters of the Association during the period of the convention.

Twelfth.—That an official button denoting the grade of membership in the Association be issued in the usual course.

Thirteenth.—That the spaces sold to the manufacturers and dealers in the Convention Hall be provided with booths and decorations, following a uniform plan, at the expense of the Association.

Fourteenth.—That a hearty vote of thanks be tendered by the members of the Board to the photographers and dealers of the Twin Cities, and of the Northwestern Photographers' Association, for their cordial welcome and splendid entertainment of the Board during its stay in their midst.

Arrangements were made with the Northern Pacific Railway Company to conduct an excursion to Yellowstone Park at the close of the convention for such members as desire to participate.

MANLY W. TYREE,
Secretary, P. A. of A.

## P. A. OF A. EXPENSE REPORT FOR 1910.

BELOW we print the detailed financial report of the Photographers' Association for the year 1910, showing receipts from all sources, of $8163 and a total expenditure of $7613.53, leaving a balance of $549.47 to be added to the reserve fund of the Association. It will thus be seen that practically all the money received from the members, manufacturers, and dealers is expended for their instruction, pleasure, and profit. This puts each convention on a self-supporting basis, neither relying upon a reserve fund to help out deficiencies nor carrying large sums forward to embarrass future executives.

P. A. OF A. EXPENSE REPORT FOR 1910.

| | | | |
|---|---|---|---|
| 1910 | Five pot. tot. of two officers . . . . | $838.00 | |
| Jan. 1. | Treas. com. for 1909 . | | $419.00 |
| | Sec. com. for 1909 . | | 419.00 |
| Jan. | Officers exp. total, div. as follows . . | 1425.77 | |
| | Pres. ex. brd. exp.. | | 79.60 |
| | Pres. Chicago and ret. exp. . . . | | 50.00 |
| | Pres. New York and ret. exp. . . . | | 65.00 |
| | Pres. Chicago and Milwaukee exp. . | | 60.00 |
| July | Pres. con. exp. . . | | 106.00 |
| Jan. | 1st vice-pres. exec. brd. exp. . . . | | 84.70 |
| | 1st vice-pres. Wash. to N. Y. exp. . . | | 35.00 |
| | 1st vice-pres. Wash. to Columbus exp. . | | 34.60 |
| July | 1st vice-pres. con. exp. . . . . | | 114.05 |
| Jan. | 2nd vice-pres. exec. brd. exp. . . . | | 33.50 |
| | 2nd vice-pres. Marion to Chicago exp. . | | 16.60 |
| | 2nd vice-pres. Marion to Des Moines exp. | | 32.50 |
| July | 2nd vice-pres. convention exp. . . . | | 64.30 |
| Jan. | Treas. exec. brd. exp. | | 56.35 |
| July | Treas. con. exp. . . | | 60.50 |
| Jan. | Sec. exec. brd. exp. . | | 76.72 |
| July | Sec. con. exp. . . | | 116.20 |
| Jan. | Exec. brd. meet., hotel exp. . . . . | | 77.35 |
| July | Exec. brd. con. exp. . | | 263.10 |
| | Officers' incidental exp. total. . . | 442.75 | |
| | Pres. incidental exp. Jan.–July . . . | | 29.95 |
| | Pres. adv. exp. . . | | 97.80 |
| | 1st vice-pres. incidental exp. . . . | | 39.70 |
| | 1st vice-pres. hanging and pack. exp. . | | 64.69 |
| | 2nd vice-pres. incidental exp. . . . | | 36.05 |
| | Treas. incidental exp. | | 79.21 |
| | Treas. assis. exp. . . | | 16.60 |
| | Sec. incidental exp. . | | 78.75 |
| | Printing exp. total . | 706.70 | |
| | 15,000 pictorial postals . . . . . | | 100.65 |
| | 14,731 stamps for same | | 147.31 |
| | Sundries . . . . | | 48.75 |
| | 35,850 pcs. of printed matter such as statements, folders, circulars, process letters, bill heads, envelopes, tickets, cards, programs, voting slips, cuts . . . | | 409.99 |
| | Women's Federation exp. to P. A. of A. total . . . . | $233.11 | $233.11 |
| | Association Annual exp. total . . . | 1227.82 | |
| | Including editing, printing, cuts, envelopes, labels, postage, express and freight | | 1227.82 |
| | School of photography total . . . . | 958.61 | |
| | Ryland Phillips lecture and school . | | 200.00 |
| | New York exp. . | | 5.50 |
| | Boston exp. . . | | 20.00 |
| | Rochester exp. . | | 21.70 |
| | Incidentals, such as postals, letters, express, and postage . . . . | | 13.97 |
| | M. J. Steffens exp.. | | 240.00 |
| | M. J. Steffens Milwaukee and ret. exp. . . . . | | 12.40 |
| | Dudley Hoyt . . | | 250.00 |
| | Theo. Endean . . | | 000.00 |
| | W. Sherwell Ellis . | | 125.00 |
| | Retouching models, backgrounds, etc. | | 70.04 |
| | Lectures, total exp. . | 232.50 | |
| | G. W. Stevens . . | | 100.00 |
| | A. E. Sheldon . . | | 100.00 |
| | J. C. Abel, 25 lantern slides . . | | 12.50 |
| | R. W. Phillips, 24 x 5 x 7 negative copies for lantern slides . . . . | | 20.00 |
| | Hall, total exp., including carpenter work, electrical work, cleaning, loan of desks, signs, etc. . | 953.57 | 953.57 |
| | Other total exp. . . | 594.70 | |
| | 1017 buttons . . | | 177.87 |
| | 500 celluloid . . | | 9.00 |
| | To legal service in redrafting constitution . . . | | 10.00 |
| | Press agency work J. C. Abel . . | | 50.00 |
| | Music during convention . . . | | 36.60 |
| | Reporting convention . . . . | | 112.60 |
| | C. W. Hearn to compiling academy report. . . . | | 40.00 |
| | Premium on Board of L. A. Dozer . | | 24.00 |
| | Prize for the best device or invention | | 100.00 |
| | F. Chambers advertising services . | | 25.00 |
| | Sundries . . . | | 9.63 |
| | Total . . . . . | $7613.53 | $7613.53 |

SECRETARY'S REPORT.

| | |
|---|---|
| Cash received, memberships and dues | $3284.00 |
| 1910) Per capita tax affiliated societies | 296.00 |
| (1911) Per capita tax affiliated societies | 62.00 |

| | | |
|---|---|---|
| Sale of ladies' pins | | $116.50 |
| Chicago day buttons | | 114.50 |
| Membership list, etc. | | 15.00 |
| Advertising and space | | 4275.00 |
| Paid out on voucher items attached | $7613.53 | |
| Balance added to surplus | 549.47 | |
| Total | $8163.00 | $8163.00 |

## PROFESSIONAL PHOTOGRAPHERS' SOCIETY OF NEW YORK.

THE following interesting program has been arranged by President Bliss for the seventh annual meeting of the Professional Photographers' Society of New York, to be held at Terrace Garden, on the 15th, 16th, and 17th of this month.

The picture exhibit this year will be an unusual one. Besides the prints which the members of the Society will exhibit, there will be shown over 400 prints by leading German photographers. This exhibit is not confined to portraiture, and is of all-round interest and excellence and will be a most attractive feature of this year's meeting.

On Thursday, the second day of the convention, Pirie MacDonald will give a talk on the prints. He will use a stereopticon to illustrate his talk, and on the afternoon of the same day he will give a studio demonstration. Another noted artist who will give a demonstration of studio work is Dudley Hoyt, who has attained the highest rank in his art. A. F. Bradley will also favor the convention with an interesting demonstration. All the men who have thus far been mentioned are former Presidents of the Society.

By special arrangement a studio has been assigned for the use of the celebrated Frank Scott Clarke, of Detroit, and one for the equally well-known F. Milton Somers, of Cincinnati. They will give demonstrations of their methods of work.

Special mention is desired to be made of that part of the program which will be supplied by B. J. Falk, the distinguished and highly esteemed New York photographer. Mr. Falk has kindly consented to give a talk on color photography as made by him in his studio with the aid of a flashlight. He is one of the acknowledged experts, and he will explain clearly the latest developments in the use of color plates, in this work. Mr. Falk is one of the first photographers in America to bring color photography into commercial use. He has also arranged to have at the hall, on exhibition, samples of his best work in specially constructed cases.

At the Terrace Garden, Charles Hallen will have on exhibition his portable tungsten light apparatus, a remarkable mechanical achievement, which has been shown to be highly practical and successful. This is Mr. Hallen's own invention, and his demonstration should prove of great value and interest.

Howard D. Beach, Secretary of our Society and the originator of the application of the tungsten light to photography, will also give a demonstration of his method of working. Something far beyond the ordinary may be expected from him.

On Friday the world-famed Metropolitan Museum of Art will be thrown open to all attending the convention. Speakers of high reputation on art subjects have been engaged, and they will entertain and instruct the members with talks on the famous pictures exhibited. It must be remembered that the Metro-

politan Section has offered fifty dollars in gold to the member submitting the best and most practical device or idea that can be applied to photographer's use. The demonstrations of these devices is an education in itself.

In addition to the above, there will be numerous talks by leading photographers on art, composition, advertising, lighting, posing figures from the audience, and other topics of moment.

The exhibit table, containing articles not in competition for the fifty dollar gold prize, promises to be of great interest—even more than at any previous convention. This will be filled with all sorts of devices for aiding photographers' work, and there will be talks, daily, explaining the various things shown on the table.

The members will also be interested and delighted with the print exhibit, each member of the Society being expected to have on exhibit either one or two of his finest specimens made during the past year.

All who attended the last State convention, or read Mr. J. E. Mock's talk about proofs, will be glad to know that Mr. Mock has consented to give a talk on advertising and backgrounds, with the aid of a stereopticon. It was conceded that he gave one of the most practical talks at the last New York convention.

Robert Frothingham, advertising manager for *Everybody's Magazine*, and one of the judges of the recent kodak advertising contest, will give a talk on advertising, specially prepared for the members of the Professional Photographers' Society of New York.

Other noted photographers will give interesting five-minute talks and demonstrate ideas of great value to every photographer.

Admission to the five demonstrations will be by ticket. The classes will be made up by the members paying their dues first. Those who have not paid their 1911 dues should send them at once to Al. Lloyd, 44 Third Street, Troy, N. Y., and should state which class they wish to be assigned to. Those who have paid should write to him for assignment. The number attending each demonstration will be limited to what the studio can accommodate.

The Trunk Line Association have granted to those attending the convention of the Professional Photographers' Society of New York special rate of fare and three-fifths, for the round trip, providing that not less than one hundred persons hold regularly issued certificates or round-trip tickets. The Trunk Line Association's territory covers New York, Pennsylvania, New Jersey, Delaware, and District of Columbia. If you are located outside of this territory, purchase a ticket to the nearest point in it and then apply to the agent at the depot for a certificate on the account of the Professional Photographers' Society of New York.

The Park Avenue Hotel has been selected as the headquarters. It is a first-class hotel, and conveniently located.

## ON PICTURING IMMENSITY BY THE CAMERA.

A DIFFICULTY commonly experienced not only by photographers, but also by painters, is in the rendering or suggestion of hugeness of bulk and vastness of space. I remember very well, in talking about mouhtain scenery with an artist, how regretfully he said: "It's no good painting a mountain, for you cannot show its size, and tiny mountains are ridiculous."

In fact, the most enthralling and essential feature of a mountain is usually its height, and if one has to part with this obvious characteristic, it is evident that the picture must be deficient and unsatisfactory.

Everyone has seen imposing peaks rendered as if they were mere hillocks —Niagara as a moderate waterfall, the expanse of sea as if the horizon were as handy as the pebbles on the beach, and miles of landscape that might be a few hundred feet. There are not many portrait painters who, given a tall man and a short man perfectly proportioned, could convey such essential characteristics as the largeness of stature in the one case and the diminutiveness in the other without the artful introduction of furniture as a gauge for the eye to measure by.

The commonest device in representing big things is to insert a figure or object of known size as a means of comparison. In this way, of course, we are clearly informed that trees are tall and rocks are huge, and the plan is a convenient one. But a little consideration must show that it is a very superficial method of eluding a difficulty that is really concerned with the fundamental nature of the subject and the sentiment that should inspire its treatment.

Moreover, it often happens that the conditions do not permit of the introduction of a familiar object or human being to perform the duty of a footrule.

Clearly, then, the artist should be so equipped as to be independent of any such adventitious assistance. He has been impressed by the immensity of the monarch of the range, and his task is similarly to impress others, even though he may have to do it on a square foot of paper, without any scale of measurement as a standby.

Size, the very quality that he wants to render, is absolutely denied him. So far as tools and material can help him, he has only the power of stating that the mountain is as large as a piece of chalk. Hence, he must look elsewhere for the means of conveying the essential characteristic of vast height and girth. He must express size by its character, not by its measurements. He must render the spirit of the mountain.

Now, it is evident that the task is one of considerable difficulty, for it has to be carried out with intangible rather than material things, and some thought is needed as to how this is to be done.

*Essential Qualities of Size.*

The first question is—What are the visual characteristics of size apart from dimensions? And here we arrive at a very important principle, namely, that the eye cannot focus, comprehend, and analyze a big object as it can a small one. If you focus on a flower you may see every petal and every shade, but if you fix attention on a mountain, the moment you appreciate its bulk you find all the colors merging together, and the lines softening, and directly you try to grasp them separately, you lose the sense of hugeness.

Hence, it follows that in rendering the sentiment of vastness, small things must be left out of consideration. In fact, they should be left out of the picture altogether, and that is a hint that the practice of using commonplace details for purposes of comparison is really contrary to the spirit of a work that aims at immensity, since their limited dimensions interfere with the sentiment required.

Conversely, the large accessories should be dealt on. Light, atmosphere, and limitless sky are all associated with ideas of space. Aerial perspective is an obvious aid to the desired effect, but here the reminder may be useful that there is perspective of atmosphere in height as well as in horizontal distance, a supremely valuable consideration in depicting the vastness of a mountain.

It is helpful to consider what constitutes the sense of largeness of space in a nearly flat landscape extending over miles of country to the horizon. The gradation of tone and definition from the foreground to the distance is a well understood necessity, but it is also noteworthy that the illusion of space is best obtained where there are no intermediate objects, such as churches, cottages, clumps of trees, and the rest of the things that go to make up the charm of a landscape, often to the detriment of its vastness of area. These half-way houses are comfortable stopping places, where the eye may rest and find refreshment. They are very pleasant, but they are absolutely destructive to the eerie feeling that arises when the vision roams over the country like a wandering spirit in search of rest and finds none. So the pilgrim may pursue his endless journey to eternity; this, or something like it, is what you want to convey, and then you have arrived at the suggestion of unmeasured space. But if you espy a homestead in the distance, there is immediately a suggestion of a happy arrival, warmth and good cheer, and the mystery of the unknown is no longer a factor. The two subjects need to be separately treated, and with a difference of sentiment, the one with a touch of gloom and foreboding, the other with some of the gaiety of anticipation; the intangible and the unknown in the one, the tangible and familiar in the other.

The vastness of a mountain, becoming more remote and mystic as its height increases, can be suggested in a similar spirit, and all this, be it remembered, has nothing to do with the material aspect of size, but only with its sentiment.

### *Mental Association.*

This brings us to the consideration of mental association in connection with immensity. It should be borne in mind that things that are brilliant, gay, and pretty, are small. Jewels, flowers, sparkling ripples, beauty's eyes are like the bright moments that come now and then to relieve the gray of workaday life. They are limited, but intense. We could not live always at the height of bliss; if we did, we should soon cease to be blissful. And just as we think of joyjul ecstasy as of brief duration, so we associate dazzling objects with little size. They are not too big to be easily taken in and enjoyed by the vision.

So brilliance is, in some degree, inimical to the conception of immensity, and the promiscuous distribution of high lights is therefore to be avoided in the rendering. Solemnity and majesty are, rather, the characteristics to be emphasized in a large, comprehensive spirit, that grasps things in their bulk, not in their details. We must represent big things in a big way, dealing with the larger lines and masses, and ignoring the others.

And what has been said of natural scenery applies also to portraiture. The artist who would give effect to the size of a tall man (and size is, after all, a leading characteristic) looks for the big, loose lines and broad masses that, when set down on paper, even on a small scale, have the faculty of expanding to the vision, in distinction from the tight and elaborate precision, so complete in itself and claiming so much consideration for trifles that it does not lend itself readily to mental enlargement as a whole.

The smallness of a dwarf might be emphasized by petty precision, on the principle that the smaller an object the more easily are all its details to be focussed by the eye. But if you were looking at a giant's head, his watch-chain would lose some of its importance, and you would not know whether his boots were laced or buttoned.

Breadth of vision is an essential condition of the contemplation of size, and

therefore breadth of treatment is necessary to the rendering. The idea of largeness is associated with that of strength, and strength in art consists in decision, boldness, and truth—not, as some seem to imagine, in indiscriminate brutality; for it is the right direction of force that tells, and its misdirection only emphasizes weakness. A certain roughness of handling is, however, compatible with size and strength, and helps the suggestion, just as finick in elaboration implies pettiness.

Another important characteristic of size is weight, and for this reason, in depicting big things, it is particularly desirable to show the influence of gravitation in a firmly-balanced pose that entirely precludes any idea of toppling over. This quality is felt in some cathedrals, where the great Norman pillars, which have borne their burden through the ages, look as if they could continue to do so throughout all eternity, and is often to be observed in the massive trunks and balanced construction of huge trees, which seem to have developed stability concurrently with their growth.

Size cannot be represented, but that does not matter if its sentiment is rendered in largeness of conception and execution. And it should not be forgotten that while this conveys the requisite idea, if given free scope, the effect may be utterly destroyed by the introduction of any pettiness of thought or tightness of finish.—ANTONY GUEST, *in the Amateur Photographer.*

## THE BANISHMENT OF PINHOLES.

BY P. R. SALMON.

PINHOLES in negatives are, unfortunately, so well known to most, if not all photographers, that a detailed description of the defect would serve only to further annoy them; what concerns a photographer most is the question of how to avoid pinholes in negatives. Pinholes, I fear, have come to be looked upon as somewhat of a necessary evil, because, however careful the average photographer may be during the handling and manipulation of the plate, pinholes invariably appear, and one of the first things a photographer does on taking the negative out of the fixer is to look for pinholes, patting himself on the back if none appear, or cursing the platemaker, assistant, or, in fact, anyone but himself, should any be seen.

It is probably on account of this popular and widespread assumption that pinholes are a necessary evil that experts have failed to pay anything like sufficient attention to the many causes of pinholes; they are said to be due to particles of dust on the plate—as, indeed, they sometimes are—and there the matter rests as far as I can make out. Dust plays havoc with most photographic processes as most of us, both old and young at the game have perhaps found out. It is said, for instance, that M. Ferrier, of the famous Ferrier and Soulier transparency process, took such extraordinary precautions when about to coat his plates as to wash down the walls of his workroom, take off all his clothes, have a bath, oil his body, and tie his whiskers in a bag. This statement may or may not be strictly true, but it is a fact that in the famous Parisian factory where the process is now worked that the most extraordinary precautions are taken to avoid dust, as I well know, having worked in the Rue Letellier factory.

But is dust the only or even the chief cause of pinholes in modern negatives? I think not, and I have another and a little known or even suspected cause to put forward. Dust, it must be admitted, is the cause of some pinholes, but all will agree that, however many precautions we take in the way of damping the darkroom floor, dusting cameras, plates, dark slides, etc., dust spots will appear on negatives and one is naturally at a loss to understand how they come there. I think I can solve the riddle, at any rate I have solved it to my own satisfaction and to the satisfaction of many of my acquaintances.

My theory—borne out by continual practice—is that rapid washing and the wiping of the film while wet, with absorbent cotton or the hand, is the cause of many pinholes and I will explain why. If a freshly developed and fixed (not washed) plate be examined under a high power microscope it will be seen that on some the reduced (developed) silver is in the form of fine needle-like particles which are embedded in the wet gelatin. Some plates are, of course, of a very much finer grain than others, and one may possibly examine several plates of various makes and brands before the needle-like formation is seen. I have, however, found the formations on some plates in rather large quantities. Now, if a plate possessing these projecting particles of silver—too small, of course, to be detected by the naked eye—be rapidly washed, say directly under a tap, or the surface be wiped with absorbent cotton, the projecting particles are dislodged, and a clear space of gelatin is left, which, of course, forms the pinhole. In the course of my experiments, when an extra large particle of reduced silver was found, I removed the same with a camel-hair brush, while keeping it under observation in the microscope, and found it to leave a clear patch of gelatin. Such particles, of course, do no harm and cannot be removed when the negative is dry, hence the necessity of gentle washing and treatment of the wet film in which the particles are embedded. Should any photographer happen to come across a batch of plates particularly prone to pinholes I beg of him to develop and wash one in the usual way, and another in a more gentle manner, allowing it to remain while washing under the surface of the water, and not touch the film at all, he will then see for himself whether my theory is correct or not. I have carried out the experiment to my own satisfaction and am convinced that rapid washing and wiping the film produces such pinholes which would otherwise not appear. When working in the orthodox way I got as many pinholes as most photographers, but now that I work in the manner indicated pinholes are unknown, unless, of course, it be those caused unmistakably by dust.

## PHOTOGRAPHING ON WOOD BLOCKS FOR ENGRAVERS.

BY JAMES MUNN.

PHOTOGRAPHY has been called an unlimited science. This may be to some a strong assertion, but nevertheless it is a true one, and we have only to consider some of the various ways in which it is applied to trade, to be able to comprehend its magnitude. By the power of photography we have our books, periodicals, newspapers, etc., illustrated in a manner that leaves nothing to be de-

sired; the beauty of processes such as photozincography, photogravure, half-tone etching, photo-lithography, collotype, and various others too numerous to mention, must be admired by all who have a taste for art, whether that taste is natural or acquired. It is not our purpose here to consider any of the above methods of producing pictures, but only to confine ourselves to photography on wood blocks for engravers. We must first consider what engraving is; not only engraving, but wood engraving, as there are various branches of the art, such as copper, steel, calico, and silver engraving. A wood engraving is one cut out of boxwood by the graver or tool, in lines, that are either straight, curved, waved, or broken (cross hatched being the proper term) according as the subject may require. In flat tints the lines are cut consecutively, the same thickness and depth, so that the result when printed shall appear without a flaw; the lines vary from 30 to 200 per inch, as the block varies in price. Before the engraving can be proceeded with, the picture must be either drawn, transferred or photographed on the wood. In order to show the advantage of photography, I will give the method of procedure necessary where the work is done entirely by drawing. We will suppose the sketch to be ready supplied, this is then traced on tracing paper with a medium pencil from the original, the pencilled side of the paper is then put on the face of the prepared block, and with a steel drawpoint or tracer the back of the lines gone over, which leaves a dim reversed image on the white ground of the block. It is then drawn in outline and shaded on the wood, according to the original on paper. It is then ready for the engraver. Transferring is much quicker than drawing, but a duplicate print must be provided as the first print will be rendered useless. The damaged portions must be made right with the pencil before cutting the block. The transfer may be a lithograph; in that case a proof is pulled from the stone and pressed down in contact with the engraving surface of the block and allowed to dry before cutting, as the ink is easily blurred when wet. By photographing the subject direct on to the wood a truer representation of the original is obtained and with much more speed,

We have now reached the subject of our title, and as there are numerous ways by which the same end can be accomplished, they shall be described in detail, so that anyone having the desire to try them may do so. It may be as well here to mention that a copying camera and a good rapid rectilinear lens are indispensable, the better the lens the better will be the picture on the wood.

A film must first be prepared to carry the sensitive salt; this is composed of:

| | |
|---|---|
| Gelatine . . . . . | 124 grains. |
| White soap . . . . . | 124 grains. |
| Water . . . . . | 15 ounces. |

The gelatine is soaked in the water for a few hours and then dissolved in a warm water bath; the soap is then added gradually and allowed to become thorougly incorporated with the gelatine. One ounce of pure zinc white is then added to the solution and finally strained through a piece of muslin. The wood block is coated with this solution, which must be thoroughly rubbed into the pores of the wood. It should not be too thick, but should have sufficient body to prevent the silver entering the wood; this will be found rather difficult and requires time and patience to accomplish successfully. When the coating is thoroughly dry, coat it with the following solution:

| | |
|---|---|
| Albumin . . . . . | 1 ounce. |
| Ammonium chloride . . . . . | 18 grains. |
| Citric acid . . . . . | 3 grains. |
| Water . . . . . | 7 drams. |

This is best applied with a broad camel hair brush. The block is again dried

and sensitized with a silver solution of 50 grains to 1 ounce of water; pour a little on the centre of the block and spread it evenly with a glass rod; when dry, print under a reversed negative. When printed, the surface is dipped in a strong solution of common salt for a few minutes. After washing, it is dipped in a concentrated hypo bath. Then wash well under the tap, exercising care not to allow the back or sides of the block to absorb too much water or the block will be ruined by warping; to prevent this it is best to coat the sides with common soap or tallow.

Another method in which the image may be printed on the wood is the following: Coat the wood with a little zinc white and albumin, polishing it evenly with the heat of the hand. It is then coated with the following solution:

| | |
|---|---|
| Ether . . . . . | 5 ounces. |
| Alcohol . . . . . | 5 ounces. |
| Pyroxyline . . . . . | 20 grains. |

When the pyroxyline has dissolved, 75 grains silver nitrate dissolved in a small quantity of water is then added. The wood is coated in the same manner as collodionizing and allowed to dry. If the block is wanted in a hurry or a brighter image desired, this coating can be dissolved off with ether and alcohol mixed in equal proportion, with a little absorbent cotton. This is allowed to dry, when it is again coated in the same manner as before, dried, and printed upon under a reversed negative, and fixed in a bath of concentrated hypo or cyanide of potassium. This is a more satisfactory way than the previous one, simple to manipulate, and can be printed in about twenty minutes on a dull day. For these methods a special printing-frame is required.

A knowledge of the wet plate process is essential to the successful working of another process, which I shall now describe, and it will not be out of place to give an outline of it. It is necessary to have tools and chemicals all ready and in a convenient position; the following may be mentioned: 4 ounces M. and S. collodion, 2 ounces silver nitrate, ½ ounce potassium iodide, 1 ounce pure nitric acid, 1 ounce potassium cyanide, 2 ounces absorbent cotton, 3 ounces alcohol, 1 pound iron protosulphite, 3 ounces glacial acetic acid, 1 ounce citric acid, 2 half-plate dipping baths and hooks, 1 bottle of white mucilage, 1 roller squeegee, the albumin from one egg, and some glazed black paper. The directions for the silver bath and developer are given on the label of the bottle containing collodion.

To begin work, we immerse the glass plate in a weak solution of nitric acid for twenty minutes, then wash under the tap with a small quantity of washing soda, the latter being afterward thoroughly removed from the plate; it is then allowed to dry in a warm current of air and afterward polished with a clean chamois leather. The surface intended for collodionizing must not be touched with the fingers after polishing, and must be entirely free from dust. The plate is held by one of the corners with the forefinger and thumb of the left hand in a horizontal position, the end farthest away from the thumb being slightly raised to allow the collodion to flow gently and evenly downward, the collodion being poured from the bottle on to the plate at that end, the surplus is run from the bottom corner into the bottle, the plate being rocked gently at the same time. This operation can be performed at the dark-room door in daylight; if that is not convenient, it must be done as far away from the gaslight, in the dark-room, as possible; as soon as the collodion sets on the plate, and before it becomes dry, it is immersed in the silver bath, which makes it sensitive to actinic light (daylight, of course, must be excluded during this operation). Care must be taken to flood the plate all over

at once, or markings will result, which means failure. Having allowed three minutes for senstizing, it can be withdrawn, and if the solution flows freely over the plate it is ready for exposure. This is done while the plate is wet, and must be done quickly, as the plate dries in about five minutes. When the exposure has been made the plate is developed in the hand, held in the same position as when collodionizing, the developer being poured on evenly and quickly, which requires dexterity and decision. With gentle rocking the image soon appears, but to dry-plate workers has the appearance of being thin; when the negative is developed so far, it is washed gently under the tap, when the water flows freely over the negative, it is redeveloped (according to the formula on the collodion bottle), during which process it becomes considerably strengthened. It is then again washed and fixed in cyanide of potassium, and finally once more washed and dried. Care must be taken in using the fixing bath not to allow it to have access to any cuts on the flesh. It is also advisable to avoid inhaling the fumes therefrom. This is how wet plate negatives are made, but the photographer on wood deviates from this after-development (unless the picture has been made from a negative supplied; in that case the manipulation is complete, with the difference that a transparency instead of a negative is produced). Instead of redeveloping the image, it is fixed at this stage, the result being the thin negative required. It is now necessary to have this film transferred to the wood. The wood block is evenly coated with a pinch of lampblack and albumin in the same way as previously described, the black being substituted for zinc white. After coating, the surface is flooded with alcohol, to which a light is applied and allowed to burn until exhausted. The surface is then polished with fine glass paper, during which operation the negative has been drying. A piece of black glazed paper (the size of the negative) is coated with white mucilage and immediately placed on the film side of the negative, this is squeegeed down into close contact with the film and allowed to stand one or two minutes until it becomes tacky, the paper is then cut round with a sharp knife about one-eighth of an inch from the outside. These strips are taken off, and if the mucilage is sufficiently dry, they will bring the film immediately underneath away with them. The image is removed from the plate and will be found adhering to the glazed paper. The block is coated evenly with albumin and the paper is pressed into close contact, with the film side down, to the wood with a roller squeegee. It is a neck-to-neck race as to which will dry quickest, the mucilage or the albumin. The back of the paper is moistened with water, and if the albumin has won the race the film will be left on the wood, the paper coming away beautifully; but if the mucilage has won, you are inclined to make remarks more forcible than polite. In the event of a transparency being made, the only difference is that zinc white is used instead of lampblack.

This is what is done by the engraver in photographing on wood, as it gives more detail, sharper images, and no chemicals are used on the wood to destroy or deteriorate its value.

---

In preparing developers for use in warm weather, it is advisable to either lower the amount of alkali given in the formula or double the quantity of water.

Development with a developer that gives a bluish-black image should be carried further than with pyro, to obtain the same printing opacity.

Chemicals are bought and sold by avoirdupois weight, but photographic formulæ are usually computed to be prepared by apothecaries' weight.

## COMPOSITION AND ARRANGEMENT.

THERE is one subject which will always furnish an interesting line of thought for either the professional or amateur photographer. It is a subject that may be treated by many writers, each giving his views with clearness and succinctness, it may be studied by the majority of readers of photographic literature, but from the examples of work seen every day, it is still necessary to urge photographers on to greater efforts in regard to composition and arrangement.

It is a mistake to think that out of the ordinary everyday family who come to the studio to be photographed an ideal picture can be made, or that twenty or thirty persons who have associated with each other for a short time, such as we find in schools and clubs, can be made to furnish material for, or enter into the spirit of an ideal, artistic composition, such as the photographer may have in his mind; nor is it within the bounds of possibility for any artist to make a prize picture from such a combination of persons. The subjects for a group which has for its object the illustration of some story, poem, or whatever other romantic idea the photographer may have, must enter into the spirit of his theme, they must be trained not only in expressing the attitudes which are necessary to explain the story, but they must also give expression in their countenances to whatever thoughts the story may suggest. What would be the effect of a picture where the attitude denotes life, action, energy, everything that goes to illustrate a story of active and daring adventure, if the face could not express the feelings which we imagine should be felt by a person in such a position. It would, most undoubtedly, be flat, uninteresting and absurd. I have seen in many photographs evidence of this want of feeling and harmony of expression; while the attitude told you a story, the face belied it.

If we look at the works of celebrated artists we will see that the face and attitude express the same idea. Love, hate, fury, despair, fear, horror, illuminate, sadden, or distort the countenance and help with clearness and force to bring the story of the picture vividly before our minds, while the attitude speaks, as it were, and gives greater effect to the whole. Take, for instance, one of Meissonier's paintings, "The Sign Painter," in the Metropolitan Art Museum. A reviewer says: "The scene is altogether a transcript from a past generation. If we remark the expression of these men (the cavalier and sign painter), we see characteristics which reflect their inner and true personality. What amiable, self-complacency is betrayed in the satisfied air with which the sign artist awaits the cavalier's verdict upon his work, and how consummate is the cool criticism on the part of the latter. We should not know where to look for a counterfeit presentment of man that approaches to nature herself than this unimpassioned inspector of the tavern sign. He is real to the very creases in his boots and the buttons on his coat." Can the glowing description of the poet or the realistic language of the tragedian clothe a scene with more explicit meaning than the pencil of the draughtsman, the brush of the painter, or the camera of the photographer? A mere description can never equal or appeal to us as strongly as when we see it before us in a picture. The painter has a greater advantage over the photographer in being able to dispense with any objectionable detail that might destroy the beauty of his subject. As a celebrated writer observes: "The details of the prose of nature he

omits and only gives us the spirit and splendor. In a landscape he will give us the suggestion of a fairer creation than we know. He knows that the landscape has beauty for his eye because it expresses a thought which is to him good, and this because the same power which sees through his eyes are seen in that spectacle; and he will come to value the expression of nature not nature itself, and so exalt in his copy the features that please him. In a portrait he will inscribe the character and not the features, and must esteem the man who sits to him as himself only an imperfect picture or likeness of the aspiring original within."

The photographer must be satisfied with nature as he finds it, whether it is frowning or smiling he must be content. Therefore if the subject is not in entire harmony with his ideas, if he does not enter into the spirit and give his thoughts entirely toward carrying out whatever story the picture is intended to illustrate, the result will be a failure. I would, then, say to the photographer, be satisfied with representing the character of your group and refrain when you have but indifferent material from trying to adorn a moral or point a tale. It is also well to remember that a long course of study is as necessary for the photographer as it is for members of any other profession. The greatest painters, poets, and writers study the words and profit by the experience of men who lived in by-gone years. They would not, or could not, reach the highest point of perfection if they had not done so. The works of men who lived away back in the ages which we call barbarous are eagerly devoured, and the creations of their hands and brains are studied by the great men of this and other generations, and why? Simply to gather material for the foundation of works which they expect to create. There are rules and reasons for everything, and unless men train themselves to go strictly according to the rules that govern their work and find out the reasons why such rules are applied to it, they cannot accomplish much, they will be toilers in the dark, stumbling and groping to the end.

At the present time, when the works of the greatest artists are faithfully reproduced and explained, it is easy for every photographer to study them and gain very great benefits from doing so.

The paintings and illustrations of ancient and modern times are collected and put in convenient shape by the publishers of photographic works, together with criticisms and explanations by celebrated art writers; these will be found to contain many things which are necessary for the photographer to know. Study the works of others, master their details, then give life to your own thoughts.

## ADAPTATION IN PHOTOGRAPHY.

BY C. O. TOWLES.

ADAPTATION, as has been said by a philosopher, is the secret of all success. How largely this is true in photography as a profession can only be gleaned by close observation of the various types of human development that make up the fraternity. There are as many, if not more, opportunities for the application of this important factor of success in photography than in any of the many other professional branches. In the first place the successful business photographer must be a thorough student of human nature, so as to readily pick out the indi-

viduality of the subject and treat it accordingly. To do this requires constant study, but when able to quickly and correctly analyze, and then adapt yourself to the requirements of your every customer, success as a business man is assured. This, however, does not make a successful photographer, no matter how much money he may make.

Let us look at his work; how far has he been able to apply this great factor, adaptation, in the treatment of his customer as a subject. We will suppose we are now in the operating room. What a field for the exercise of this great faculty; here the comprehensive ability of the operator, artist, or mechanic is determined. What will we do? Will we work by rule and produce a stereotyped result—an average portrait? Even the "dollar-a-dozen" man can do this. Will we adapt ourselves to the condition, and through a high cultivation of art's most sensitive handmaid—instinct—work intelligently and attain results which will mark the photographer as an artist and make him worthy of success? This has been for years my highest aim—to produce portraits reflecting the qualities which make a man and a woman, so that public opinion may be affected by my portraits as they would by my subjects.

It is not always easy to do this, yet it is always a pleasant occupation with the many and varied types that make up the photographer's patronage. My experience has been that the highly nervous temperament is the one that the average operator finds the most difficult to handle unless he is adapted to his work; then they are the most pleasing of customers and do you more good than any other type.

I have studied this type of customer carefully and, I may say, very successfully. They will usually come in and say: "Mr. Towles, I want to sit for a picture today; that is, if you think you can make me a good one. I have never had one that looked like me; the last I had was made by Mr.—— (usually naming the leading photographer in some large city), and they were horrid; but I have seen so many beautiful pictures you have made, and I thought I would try it again." This is the kind of customer that gives the most trouble to the photographer, and yet I claim that such customers are most appreciative if you know just how to handle them. My personal experience with this temperament has furnished me with some of the most pleasant recollections.

From among them I will mention one whom I remember as possessing the most distinct individuality it has been my pleasure to meet. There came to our city a few years ago a young lady as vice-principal in our high school, an accomplished and beautiful girl, whose peculiar style and manner at once attracted me. It was not my pleasure to meet her until she visited the studio in a business way, and yet, from close observation, I at once felt I had known her a long time. Like all people of her type, her marked individuality was due to her nervous temperament. After a pleasant greeting and a few complimentary remarks concerning the pictures, she proceeded to relate her former trouble in securing a portrait that was good or that looked like her.

I assured her that we would establish a new record for her, and after due preparation she joined me in the operating room. In the meantime nervousness had entirely changed her usual nonchalant expression, and I at once realized why all former pictures of her had been failures. What did I do? I did not attempt to make a negative for ten minutes; to do so would have meant failure. But I did bring every faculty of adaptation into play while apparently adjusting my light, etc., solved the secret of her nervousness, removed it, and made a number of satisfactory negatives.

By Wm. Gill, Colchester, England

*From American Annual*, 1911

By E. G. Dunning, New York

*From American Annual*, 1911

By C. F. Townsend, Des Moines, Iowa

By Howard D. Beach, Buffalo, N. Y.

*From American Annual.* 1911

By New Photographic Studio, Berlin, Germany

1 Two Noblemen

2. Duchess of Devonshire

3. Unknown Lady

4. Viscount Althorp

*Illustrating Sidney Allan's Article*

5. Miss Bowles
6. The Crewe Sisters
7. Strawberry Girl
8. Mrs. Hardinge

*Illustrating Sidney Allan's Article*

9. Countess Spencer, 1784
10 Countess Spencer, 1782
11. Lady Bingham
12. Mrs. Hyde

*Illustrating Sidney Allan's Article*

# MASTERS IN PORTRAITURE—JOSHUA REYNOLDS.

BY SIDNEY ALLAN.

REYNOLDS was not only one of the greatest, but also one of the most successful painters England produced in the eighteenth century. He was a contemporary of Hogarth and Gainsborough. Indeed, two worthy competitors, but Reynolds eclipsed them in fame as well as wealth. He was the most popular of the three, surely during his lifetime, and even now he holds his own with any of the English masters. He is considered the founder of the so-called English School. In his biography we read that he earned £6000 annually, and that he left one million and a half to his heirs. The term "poor artist" surely did not apply to him.

He is best known as a portrait painter. He was a successful and an accomplished master at an age when most painters still study or struggle for professional and social recognition. He painted nearly everybody of consequence, and with such ease, that he frequently finished sixty to eighty portraits within one year. The English aristocracy was always used to good portrait painters. Holbein, Van Dyck, Rubens, had established a standard of rare excellence, and it was quite natural that Reynolds built up his style on the Old Masters. In his *Analysis of Beauty*, he wrote that there was only one entrance gate to the study of nature, and that the key was owned by the Old Masters. He acknowledged himself that he had learnt the largest part of his wisdom and facility of expression from Titian and Tintoretto, Correggio and Veronese, Guido Reni and Velasquez. But he knew how to amalgamate their traits with his own individuality.

As we look over the accompanying illustrations we are struck by dignity of pose and elegance of arrangement. Reynolds was at times an exquisite colorist, although Gainsborough was his superior in that respect. This, of course, is lost in the reproductions, but the local values are fairly well rendered, and it is this quality which is particularly interesting in his work. There is always subtlety and contrast. Notice Figs. 1, 2, 5, and 9 in particular.

Fig. 1, the portrait of Two Noblemen, is an excellent two-figure composition. By painting one figure in a dark dress and the other in a lighter one, he produced a fine division of space. The light spots of the pictures and hands balance the two luminous faces. The background is an excellent example of simple handling. It seems to me that Reynolds was more successful in his plain than his elaborate landscape backgrounds. The latter are a trifle overdone (*vide* Figs. 2, 4, 6, 8, and 12). Are not Figs. 3, 5, 7, 9, 10, and 11 much finer? The composition in Fig. 1, I believe, could have been improved if the head of the darker figure were a trifle higher than the other. It would have produced a better diagonal arrangement.

Unusual light effects are another characteristic of Reynolds' paintings. Notice, for instance, how the light strikes the face and certain parts of the dress, leaving the rest in semi-shadows. It is natural light effect that explains itself. Just that way early twilight strikes objects through a vista of tree trunks. One even notices the shadows of branches on the arm and waist. We notice a similar effect in the Young Viscount (Fig. 4),

standing under a baldachin. How they ever arranged such drapery effects in the open I do not know. It looks a trifle absurd. But the light is correct. It strikes the figure from the front and above, coming from the right side, as is plainly seen in the hand and the book.

Fig. 3 is an ordinary good portrait of the triangular construction. The inclination of the head, always effective in a full-face view, the slight turning of the bust toward the left, the arrangement of the hair, and a due regard to the textural qualities of the dress lend special charm to the picture.

Texture is one of the strong points in Reynolds' work, particularly so in some of his portraits of children. It is evident in Fig. 5, and still more so in Fig. 7, which could pass for a Rembrandt. Fig. 5 is photographically possible, but the particular surface charm of the little Strawberry Girl (Fig. 7) could be produced by hand manipulation. The background in Fig. 7 is almost too opaque, but it helps to accentuate the glimmer of light on the dress.

Reynolds favored the triangular arrangement in the majority of his portraits. We notice it in Figs. 5, 8, 9, and 12; it is even noticeable in Figs. 6 and 10. The pyramid shape of human figures is always effective, particularly for bust portraits and the ordinary upright size.

In Fig. 6 the different height of the heads helps the composition considerably. The figures are well placed, but somewhat small for the allotted space. There is too much landscape for a portrait, the trees are too conspicuous, and yet the arrangement is exceedingly well balanced. This is due, it seems, to the flow of drapery and the picturesque pose of the arms. And, after all, the two figures, despite detail, make up the largest plane, and for that reason dominate the note of black and white contrast in the background.

Reynolds always put special stress on the management of hands. They are very beautiful, but idealized. They always have the same perfect shape and languid droop. They are not characteristic of the sitter except in pose and gesture, and in that respect furnish valuable material to the student of composition.

Mrs. Hardinge (Fig. 8) is an excellent example of line arrangement. Everything is round and soft and seems to flow in beautiful curves, although the lines themselves have a tendency of being straight and angular. But they never come to an abrupt point. The scheme of line is carried out through the whole composition. It starts with the hair, and the same curves are repeated about the shoulder, the waist, in the folds of the sleeves, the hands, and the skirt. It even influenced the vista of light in the background. I do not believe that such arrangements are possible with our modern costume. It may be possible to imitate this particular picture, but it is quite a different problem to invent a new one which would hold its own with this picturesque arrangement.

Figs. 9, 10, and 11 are three simple bust portraits, about as well managed as can be imagined. Fig. 9, the Countess Spencer, is particularly noteworthy for the simplicity of arrangement, the facial expression, and textural charm. It is astonishing how well this painter managed, in nearly all instances, to concentrate the light upon the face and the principal parts of the body. And yet, as I remarked at the start, the lighting is quite out of the ordinary. It throws distinct shadows, emphasizes the modelling and principal features of the face, and yet is diffused. Look at the shadows under the brim of the hat and under the nose in Fig. 10; how distinct and yet how transparent they are. Notice the touches of light on the nose, upper lip, and around the mouth in Fig. 11.

Reynolds' light has the true vibratory quality that illumines the face with vague accents, emphasizes the features here and there by a dark passage, and gives a vague shimmer to the shadowy parts.

Reynolds' popularity with his sitters was largely due to his comprehension of public taste and his willingness of meeting his audience half way. He was always ready for making concessions. He was not above making a "pretty" picture, as Fig. 12, but he always did it in such a masterly fashion that even the connoisseur finds it easy to forgive certain shortcomings. For instance, he never objected to the introduction of all sorts of unwieldy paraphernalia, as dogs, fancy costumes, and all sorts of cumbersome and story-telling objects. He simply made the best of them. He was such a master of composition that he generally managed to subdue them. And in many they proved a valuable adjunct, as they lend an additional richness and picturesqueness to his arrangements. His portraits have an air of completeness about them that is as rare as it is fascinating. Each of his paintings is a lesson in composition and worthy of the closest analysis.

## THE WINDOW PHOTOGRAPH.

Mr. Chas. H. Davis, of the well-known firm of Davis & Eickemeyer, contributes the following interesting remarks in our contemporary, the *Sunday Sun:*

The window picture has come to be recognized as a standard style in photography. The subject is posed against a background, which is usually intended to represent a window through which the light is falling.

This is the window picture reduced to its very simplest elements. Various developments of the style have produced much more elaborate ornamentation. More than the mere skeleton frames of the window panes is now seen in some of these pictures. Curtains and other draperies are added to decorate the scene more richly. Cushions, supposed to be part of the furniture of a window seat, flowers and other ornamental details may be supplied according to the taste of the artist.

The history of the window picture is curious. Charles H. Davis, who first used this form of photograph in New York, thought the idea all his own. In 1895 he had the first window background painted. Of course, there was a prototype even in this country for such backgrounds. Mr. Davis only claims for himself the discovery of the interior view of a window as a very decorative background for a photograph.

The result of that discovery led him to various experiments, During the years that he has been making window pictures various backgrounds have been used by him, but they have always possessed sufficiently marked characteristics to be classed as window pictures.

There are various advantages in this kind of background. Its mere decorative value is not all. There are possibilities of posing the figure in a way that other scenic details might not offer.

It is possible to change the figure's attitudes with greater emotional significance. They make it possible to convert into an attitude what might otherwise be a mere pose, and the definition of an attitude makes it plain that it is pose or gesture plus some emotional meaning.

Some of the most successful uses of this possibility have been shown in the window pictures expressing expectancy,

curiosity, or suspense on the part of the subject, who may have rushed to the window, may be only idly standing there to look out, or may have stepped to the window to get the light.

Any background that suggests such possibilities to the spectator and enables the photographer to impart a sense of action or an emotional feeling to his figures is, of course, of inestimable value to him. And therein lies the secret of the window picture's international history.

A little more than a year ago one of the best known photographers of beautiful women in London began to send to this country window pictures. Usually the subject was posed against a window with square mullions. This was very highly praised.

Its novelty was much discussed and few persons knew that this kind of picture had practically been developed in this country. Mr. Davis had carried it to such a degree of beauty that it appealed strongly to the London photographer into whose hands Mr. Davis' pictures fell. His successful use of the same idea made him famous.

Naturally the American photographer who had done so much to add this new style to his art was somewhat annoyed that all the credit of it should go to this London studio, whereas it was his skill and originality that brought the window picture into the fame it enjoys today. So he set out to let the fact be known that he was the pioneer in this direction.

It was then that he discovered a still earlier maker of just the same kind of photograph. One of the well-known English photographers of the '60s had made this same picture. Of course his efforts never reached the artistic level to which Mr. Davis has brought his examples of this same kind of picture.

## THE FUTURE OF COLOR PHOTOGRAPHY.

THERE is no more fascinating problem in the whole domain of science than that of photography in colors, we read in the London *Times*, and there is none in which the difficulties appear so insuperable. The solutions that have been proposed up to the present are placed by this paper in two groups. One contains all "three-color" processes, direct or indirect. The other comprises the so-called Lippmann interference method. "The former cut the Gordian knot instead of untying it and the latter has never progressed beyond a laboratory experiment and it is doubtful if it ever can do so."

The Lippmann process has been carried out successfully by a few experimenters, we read further, but it requires a good deal of manipulative ability. A sensitive emulsion so fine in grain as to be practically transparent is made and coated on to glass. Unfortunately, extreme fineness of grain seems to be incompatible with any high degree of sensitiveness, and such plates, although "orthochromatized" or properly tinted as completely as possible and made more sensitive by bathing in silver nitrate solution, are still extremely slow. They are exposed in a special plate holder, which allows metallic mercury to be in contact with the film, forming a mirror, on which the image impinges, the glass side of the plate being turned toward the lens. The image is developed and fixed and then, when it is viewed at a particular angle, the colors make their appearance.

"Beautiful as is the process, and full of interest as a physical experiment, there can be little doubt that it will never

be anything more. The colors, which are those of thin films and due to interference, are only approximately correct at the best, at least when natural objects are portrayed. Few experimenters have attempted these, most resting content with the spectrum, the pure colors in which are reproduced with very fair fidelity. There is no method of reproducing them, and, except at the proper angle and with due arrangement of the lighting, the colors are either not visible or are not correct. When the vehicle used is gelatine, the extra moisture given by slightly breathing on the plate causes the film to expand and the colors to alter rapidly.

"The theory of the process is that a series of *maxima* and *minima* of light action is formed in the film by the reflection of the light rays upon themselves by the mirror of mercury; and the film when developed has recorded these as a series of layers of deposit, representing the *maxima*, separated by transparent layers—the *minima*. These layers have been seen, and have actually been photographed, Mr. Edgar Senior having succeeded in cutting and photomicrographing cross sections of the film, which clearly demonstrated its stratified structure.

"The bare description of these photographs is sufficient to show how hopeless is the attempt to make these optical curiosities the basis of a process of color photography of a practical kind. Prophecy is proverbially risky, but it is hard to see in the Lippmann process even the faintest adumbration of a solution of the color photography problem in practice."

The three-color process in its many varieties hardly attempts to give what the man in the street would call color photography at all. He uses the expression, so far as he has any definite idea of it whatever, as implying a process as automatic and mechanical as he believes ordinary photography to be; giving a faithful rendering in color, just as the photography he knows gives in black and white. It must not be a transparency on glass, which he persists in calling a negative, but must be on paper or at least on some opaque support, so that it can be framed or hung up like a water color or an oil painting. A photographer would say that he does not use the term color photography in anything like so narrow and restricted a sense, but to the great majority this description fairly describes the meaning they ascribe to the phrase. In this sense, how far are we today from the achievement?

"The discovery of some substance which, when exposed to the action of light, would give a product of the same color as the light which was acting upon it would be a solution on the lines of the ordinary photographic process. If this substance could be coated upon glass, and if the colored products were transparent, so as to transmit as well as to reflect rays of their own color, and were permanent, and if the images so obtained could be 'fixed' in the photographic sense, by the removal of the unaltered sensitive substance, the task would be accomplished. But what a series of 'ifs'! At present there is no substance which in any circumstances can be given the whole range of known colors, much less assume them under the stimulus of light. Nor is there any sensitive product which can be relied upon to give even one color with approximate accuracy when exposed to light of that color.

"It is interesting to note, as far as color is concerned, some of the most protean compounds are the so-called 'photo salts' of silver, investigated by Carey Lea; and to put against that the fact that no other metal plays so large a part in photography as does silver. But this is probably only a coincidence

The earlier literature of photography contains many curious observations of experiments in which in some cases some of the colors of the subject have been recorded in the photograph; but the experiments could never be repeated with the same results, and it is now supposed that such of these instances as had any foundation in fact were due accidentally to interference more or less on the lines afterward worked out by Lippmann, and not to any peculiarity on the chemical side as the early experimenters believed."

During the last few years several experimenters, and particularly Dr. Smith, of Zürich, have been working on a bleaching-out color process. Although in essence a three-color method, such a process would be a great deal nearer the popular idea than any of the other three-color methods. Dr. Smith has succeeded in making a paper, which he calls "Uto" paper, which, originally dark gray in color, gradually bleaches to a hue which is approximately that of the light which causes the bleaching. The paper is anything but sensitive, a print from a colored transparency on glass requiring many times as long as would be needed to give a print on photographic paper from an equally transparent negative, and so far no method of fixing the prints has been fully successful. The method, however, crude at present, is at least promising, pointing, as it does, directly toward a result which would be accepted by the public as color photography.

"When 'Uto' paper, or some similar product, has been perfected, as far as accuracy in reproducing the colors and permanence of result are concerned, a great step will have been taken. This step does not seem to be impossible, and Dr. Smith and other inventors are at work upon it now. Although the paper would still be out of the question for use in the camera, as it would be much too slow, it might nevertheless form the printing material in a composite method, the 'negatives' being made upon 'Autochrome' or similar plates, which could then be used for printing on the 'Uto' paper. Already attempts have been made in this direction, with results which may fairly be called hopeful; but this is about as far as things have gone.

"It will be seen then that, in spite of the very beautiful results which can be obtained by the three-color process, we are still very far indeed from color photography as the phrase is used by those who are not photographers. Whether it ever will be attained in that sense, or whether the perfection of direct three-color methods will lead to their general acceptance as color photographs, it is hard to foretell. We are not much nearer than we were in the days of Daguerre; but, thanks to the brothers Lumière primarily, and to other experimenters, we have taken great strides toward the latter. But it is always possible that at any moment the direct result will be reached by some hitherto unsuspected path. What has already been accomplished is so great that it would be rash to attempt to set a limit on what will be done, even in the very near future."

It should be explained in conclusion that the term three-color process is indefinitely employed for any photomechanical process of reproducing in color applicable to either stone or metal. In this sense, to quote one authority, "the general process consists in first making three photograph negatives of the same subject through three different color screens representing the three primary colors—red, yellow, and blue." From these three negatives printing blocks are made. The underlying principles are those of color photography, in the vague sense of the term.—*Current Literature.*

## CARBON TRANSPARENCIES.

By transparencies I refer, in this article, more especially to lantern slides; at the same time, what is here written also applies equally to all classes of transparencies, be they large ones for framing, slides for the stereoscope, or for the making of enlarged negatives.

It is strange that so much has been said and written upon the advantage of using the carbon process when making transparencies for use in making enlarged negatives, and yet *so little* upon its use for lantern slide work, most textbooks and writers passing the subject over with two or three lines. Further, although our trade workers almost invariably use the carbon process for the production of large negatives, they almost as invariably send out transparencies made by any and every process but carbon, except where specially stated on the order. Why is this? Is it that they use the process that first comes to hand when doing this class of work; or is it that the photographic public will not have carbon work? That silver does not yield nearly so good results as carbon goes without saying, though I do not intend to infer that good lantern slides cannot be made by the use of the many brands of lantern plates in the market. Far from it. At the same time there is no process that yields the best results with such ease and certainty as the one under consideration; no method that is less likely to yield a transparency that is not good, and that at the same time is accepted, to save trouble, as good enough. Further, the very mention of the word carbon to most workers simply gives them fits, and one who knows the process is almost inclined to also have fits, *of laughter*, at the look of horror upon the face before him, knowing that the whole thing is so simple, as he does. In fact, an amateur, while watching me at work not long ago, exclaimed, "Why, carbon is merely child's play." I do not intend to say it is so easy as this, yet, for certainty of results, once the initial stages have been overcome, no process can come near it, and, if anything, a transparency is more easy to make than an ordinary carbon print.

The tissue may be obtained either ready sensitised or not, according to the time it is likely to be kept by the user. Sensitizing is, however, so easy that no one need fear to undertake it, and sensitize his tissue one or two days before he intends to use it. This course will give him the advantage of being able to prepare just the number of sheets wanted; and, moreover, he can stock and prepare various colors, and thus there is no need for one to be somewhat bound down to one color for one day's printing.

The real trouble is that of drying the tissue, after the bath, and the following hints may be found useful. The sensitizing bath is prepared as follows:

| | |
|---|---|
| Water (distilled for preference) . | 10 ounces. |
| Potassium bichromate . . . | ½ ounce. |
| Ammonia (liquid) .880 . . . | 3 drops. |

The cut tissue is immersed in the solution for thirty seconds, taking care that no air bells form on the surface, it is then drawn over the edge of the dish, and laid upon a sheet of glass or zinc and lighlty squeegeed (*with a flat, not roller squeegee*), to get rid of the surplus moisture, and hung up to dry, using either wooden clips or pins. The solution should not be over 80° F., but, on the other hand, the tissue may be allowed to remain in, in winter, for from forty-five to sixty seconds. It is best dried in a room in which a fire has been burning

during the day, the sensitizing being done at night by gas or lamplight, the tissue is hung near the fire-place pinned to a clothes-horse or to the edge of the mantelpiece, the clothes-horse being, say, five or six feet from the fire, it will be dry, ready for printing in the morning. The blinds must, of course, be drawn, to exclude all white light. The *great point* in drying is to watch that it does not take too long, if it does trouble in stripping is likely to result.

Another point that frightens amateurs is the coating of the glass with the gelatin substratum; this is not necessary, neither is the operation of coating the tissue with collodion that is sometimes recommended; both these are intended to prevent the delicate high lights from being washed away during development, whether they do so or not is an open question; I have used the tissue with and without collodion, the glass with and without the subtratum, and with and without either or both, and I have failed to find the supposed difference that is said to be shown, or any fault that could be put down to the non-using of, or any advantage that I could trace to the using of either the substratum or collodion. It may be that I always keep my tissue some two or three days prior to using, if this is so, I see no reason to deter others from doing the same, it certainly is in better working condition, if kept this length of time after sensitizing provided always that it is *kept perfectly dry.*

The great thing is to have the glass chemically clean. The tissue after exposure to light (with the usual safe edge using either a print meter or another negative as a guide to printing, *i. e.*, a negative of as near as possible the same density with a slip of P. O. P., by the time the P. O. P., is printed *to finished, not toning depth*, the tissue will have had sufficient exposure), it is then soaked in cold water until it has become limp, the glass is then slipped under it, and both withdrawn together, the face of the tissue being in contact with the glass; it is next well squeegeed to get rid of any air bubbles, and put under blotting with a slight weight, for from fifteen to twenty minutes.

The time passed it is placed in warm water, and when the gelatin begins to ooze from the edges freely, the paper is stripped off, and the warm water gently laved or splashed over the print, which is now on the glass, until the excess of gelatin is removed, this being the development. When fully developed it is placed in cold water for a short time to chill the gelatin, and then given from three to five minutes in an alum bath, and finally washed for, say, five minutes, and put aside to dry.

When dry all that remains to be done is to mask and bind up as usual, but remember that the print, being reversed, the spots which mark the side to be placed next the condenser *must be placed on the glass side of the slide itself*, and not, as is usual, on the cover glass.

Any tissue may be used for the transparencies or lantern slides, but for the very best results I would say use the special transparency tissue, this contains more pigment and of a finer nature.

Transparencies or lantern slides may be produced in a variety of colors by using aniline dyes.

As a final word, may I say, never use the cushion shape masks For slides they are a mistake, and never should be used. *Square corners, please.*

---

To find the approximate focal length of a lens, focus on a distant object, *e. g.*, a church spire, and measure the distance from lens to ground glass. With R.R. lens measure from the stop; with a single lens measure from the diaphragm.

## MACHINE SHOP PHOTOGRAPHY.

(Concluded from page 16.)

The foreground should be prepared by laying clean white boards on a level with the feet of the machine, extending well in front, at each end, and at the rear as far as possible, so as not to show the joining with the screen. The screen should be carried back of the machine far enough to be out of focus, and if at all soiled, it should be kept in motion. A gentle swaying sidewise will be sufficient to make a clean background. Great care should be taken to keep this screen clean and to keep it far enough away from the machine so that no shadows are cast upon it, as this will greatly facilitate blocking-out or painting out the background on the finished negative. This blocking-out is necessary if a pure white background be desired.

Usually the machine has the maker's name cast on it, as well as pattern and piece numbers. These can be prominently brought out by rubbing them over with chalk. Ordinarily, a well-exposed and developed negative requires no retouching. If, however, it should be necessary, my advice is to take it to some professional retoucher, and, at slight expense, have it done properly. This is a trade in itself, and it is cheaper to have it done than to learn the trade.

A long-focus lens I find to be the best, as it gives better definition and less distortion than a short-focus, wide-angle, especially if the machine to be photographed is long and narrow. The lens should be absolutely rectilinear, otherwise the straight lines in the machine will be curved and the whole machine distorted. Oftentimes, however, a cheap lens will give good enough definition and prove quite as satisfactory as a very expensive one. The box should be good and strong, and the tripod on which it is mounted should be heavy and rigid, so as not to vibrate or jar and so blur the picture. Stop the lens low down and expose for the shadows and develop slowly, and, if necessary, accelerate development where it is weak. Continue development until all detail is out and there is sufficient density and contrast to give a good print.

Do not get the plate too dense, as it makes a hard "printer," and one that has too great contrast to be satisfactory. Regarding length of exposure, development, etc., one must be governed wholly by his own particular surroundings and conditions, the kind of plate used, the size of the stop, the time of the year, the hour of the day, and the value of the light on the work.

## WHEN IS A PLATE FIXED?

EVERY once and awhile we see appearing in our journals, among other stock articles, paragraphs on the use of two fixing baths, also stating that when a plate is immersed in hypo the silver is first changed to hyposulphite of silver and sodium, which double salt, while it is transparent, and gives to the plate a transparent instead of a white appearance, still is insoluble in water; and further, that if the plate is taken out of the fixing bath the moment it clears, it will never be free from silver, and that no amount of washing will make it safe. Also that this double salt is soluble in hypo; so it is only necessary to leave it in the fixing bath long enough to effect the solution of this salt; and then comes

the proposed use of this second bath, which is used to effect this latter reaction.

The above is perfectly familiar to all readers of our photographic literature. It is copied from one magazine to another, so it is hard to escape it. In regard to the use of two baths, we would say that if the first bath is fit to use at all, then it is good for both purposes. If not strong enough to dissolve the double salt, then it is not good to use for any purpose. The use of two baths reminds us much of the man who, having two dogs, cut two holes in his barn door; a large one for the big dog and a small one for the little dog. The usual advice giving for fixing is to leave the plate in the hyposulphite of soda five or ten minutes after it is cleared, but no definite statement of time seems to be known. The following experiments were carried out for this purpose:

In order to have uniform results, but one kind of plate was used, which happened to be Seed's 26x, probably an average plate. The hypo solution was made with one part of the crystals in four parts water, and a transparent glass upright fixing bath was used, to obtain exact time of reaction.

With four plates which had not been exposed or developed, and were put into the hypo with dry films, it took five and one-half to six and one-half minutes, an average of six minutes, at which time the plates were perfectly transparent, and each one was transferred to running water as soon as cleared. With plates that had been in the developer, or had been soaked in pure water, it took just one minute longer to clear the plate. This gives an average of seven minutes for fixing plate sufficiently to make it transparent. Thermometer was 65°—and the temperature makes considerable difference; also the make of the plate has much to do with the time of fixing.

The following experiments were undertaken solely to find out how long it took the hyposulphite of silver and sodium to dissolve, and we must say that the results were not what would have been expected from the conventional statements:

Two plates of the four above mentioned were washed in an upright bath for ten minutes, in a strong current of water, and then tested. A silver reaction was at once given, just as we would have supposed; but when the other two plates had been washed for two hours, the result was *not* as we should have expected.

These latter plates, which were taken from the hypo at the moment of clearing, and had simply been washed two hours, were tested for silver; one plate by the sulphide test and the other plate by removing the wet film, incinerating it, reducing in a porcelain crucible and testing the residue for silver, one process being a check on the other. To our surprise, we found these two plates were perfectly free from silver. Then this latter experiment was repeated, giving the same result, and showing that when a plate is perfectly cleared and washed sufficiently long no silver remains in the film.

Now there is no doubt that silver and hypo will form under the right conditions a hyposulphite of silver and sodium—in fact, it forms two salts of this name, one of which is insoluble and the other is soluble. The first can be obtained by adding silver nitrate to hypo solution; the second must be obtained by removing the insoluble salt and precipitating with alcohol.

This first reaction we can see here; the latter is of no particular interest in this connection. To illustrate the formation and reaction of these two double salts we will form and dissolve them here. In this glass we have a strong solution of hypo, sufficiently strong to readily dissolve the hyposulphite of silver and

sodium as soon as formed. In another beaker we have a solution of silver nitrate, which we add to the hyposulphite of sodium. You observe a white precipitate forms, which at once dissolves. This precipitate is a soluble hyposulphite of silver and sodium, and shows clearly that it dissolves instantly and completely in the reagent that precipitated it.

We now dilute the hypo to a weak solution and add the silver again. This time you observe that the precipitate does not dissolve, but quickly turns black, owing to the formation of a sulphide.

Why did we not find silver in the films that were withdrawn from the bath at the moment of clearing? Supposing a double salt has formed, and even supposing it has not dissolved while in the fixing bath, you must still remember that the film is saturated with hypo, and that this is not removed completely for a long time while being washed, which would easily account for the silver being entirely dissolved before the plate is removed from the washing water.

But the truth of this matter is, that if a strong solution of hypo is used there is no double salt formed that is not readily soluble; but where a very weak fixing bath is used there may be danger of the hypo not being in sufficient excess to properly dissolve the silver, and in that case an insoluble salt would form.

## SHALL WE HAVE POSTAL DISCRIMINATION?

[It would seem that the Post Office authorities have determined to saddle the monthly magazines, including Wilson's Photographic Magazine, of course, with an increased discriminatory rate, to help wipe out a so-called deficit. The following summary from *Suburban Life* explains the situation very clearly. Read it carefully and then do not fail to write your Congressman and Senator at once. A point not to be overlooked is that if the proposed changes should be made, "Inevitably the cost must reach the subscriber, one way or another." Why should you be discriminated against? Ask your Congressman.—Ed. W. P. M.]

It seems certain that the present Federal administration is determined to put through the now proceeding final session of the Sixty-first Congress, if possible, an extraordinary scheme to discriminate against the magazines by raising the rate of postage they now pay. Here are the exact facts:

The post office has for years been transmitting certain publications "not issued primarily for advertising purposes" at one cent per pound. Those issued daily or weekly, of a certain familiar appearance, it calls *newspapers*. Those issued less frequently, and looking differently, it calls *periodicals*. The one-cent rate has applied to all alike. The great Sunday "newspaper" wads go through the mails just the same as *Suburban Life*.

The Post Office Department, the largest business machine in the world, shows each year a "deficit" amounting to a small percentage of its total vast transactions. To eliminate this, the present administration seems determined to make the transmission of intelligence a source of profit. That all the doings of the War, State, Navy, Commerce and Labor, Judicial, Legislative and Executive departments, and most of the doings of the Interior and Agricultural departments, result in "deficit," is certain. That the Post Office Department *transmits without a cent of charge and without record of cost*, vast quantities of correspondence, seeds,

plants, trees, books, maps, as well as occasional chairs, desks, boxes, and the like, between a hundred thousand federal offices and employees, is just as certain.

That the Post Office Department pays two to eight times as much to the railroads to haul mail-bags in one end of a car as the express companies pay to haul parcels in the other end of the same car is a definite fact.

Last year an investigation was begun by the Senate Postal Committee, under Senator Penrose, of the business conditions in the Post Office Department. Expert accountants were employed, and their report, recently summarized by Senator Penrose, was among other things to the effect that (*a*) no system of accurate accounting is in use in the department; that (*b*) separation of the actual cost of carrying second-class mail had not been made; and that (*c*) no accounting had been attempted of the cost of transporting *free* the vast volume of federal official mail.

That is, the experts hired by the postal committee insist that the Post-Office Department does not know what causes its claimed "deficit," or, until it counts up its free work and the subsidies paid to the railroads, can it know that there *is* a deficit.

Now no reputable periodical desires to have the government carry it at a loss. The newspapers and magazines alike are ready and willing to pay the *cost* of the service rendered them. They ask the government to ascertain this cost; but they urge that the government shall also ascertain and take credit for the cost of its own postage. They likewise ask the government to buy its mail transportation of the railroads at no higher price than the express companies pay. They object to being singled out for special taxation to carry the government's mail or to pay its subsidies to the railroads.

Incidentally, the editor here mentions that he has heard a responsible executive officer of a great news company offer to take over at one cent a pound, the handling of the periodical mail, now and properly a government monopoly. He felt sure he could make a great annual profit transporting it!

The administration has made public its present plan for eliminating that most uncertain postal "deficit." It is as follows:

The postal authorities propose to allow the "newspapers" to continue to be mailed at one cent a pound, or free within the county of their origination, regardless of the quantity (or quality) of advertisements they carry.

They propose to arrange a sliding-scale rate for "periodicals," so that such reading matter as they approve shall travel at one cent a pound, while the advertising (of none of which they approve *in magazines*) is to be penalized by a much higher rate, and the resulting special combined rate is to be determined each month for each magazine!

They propose, it is said to legalize this discrimination, not by legislation in the open, but by inserting it as a "rider" in the main appropriation bill, to defeat which would stop the wheels of government.

The claim is made that, as advertising in periodicals (not in newspapers, mind you!) is supposedly profitable to the publishers, it should be singled out for special taxation. In making this claim the postal authorities show just as much knowledge of magazine publication as they show of the costs of the postal service—and that is, none at all.

Under this plan, whiskey, beer, patent medicine, "get-rich quick" mining schemes, and suggestive "personal" advertisements, barred out of reputable magazines at any price, are to be classed with the reading matter *in the newspapers*, and permitted to be mailed

at the present rate of one cent a pound. But advertisements of automobiles, seeds plants, boilers, books, soaps, clothing, shoes, house-building, and home-decorating materials, and other advertising *in magazines*—are to cause the magazines to be charged a much higher rate for mail transportation, under a government monopoly.

We now pass this information on to our subscribers, many of whom are intelligent voters, and constituents of the Congressmen who alone can legalize this scheme, with a plain statement of what must be the outcome.

If this radical and discriminative change in postal rates is made, it will greatly increase net magazine costs. No subscriber to any American magazine at present pays in his subscription price the cost of making the magazine, independent of its advertising. This statement applies to all the great literary, uplift, civic and illustrative periodicals which have become the most notable educative force in all the world, and have also become "the market-place of the world" in their rigidly scrutinized and safeguarded advertising pages.

At first, the publisher will lose the cost of the excess punitive postage, and it will cripple many publications. Inevitably the cost must reach the subscriber one way or another.

A government censorship of magazines —for that is what this project would result in—would put the United States in line with Russia, Venezuela, and other ill-governed nations, in which a censorship is used to throttle free thought.

The case is thus fairly stated. Every honest American is interested. Action, prompt action, is needed, on individual Congressmen and Senators. It is said that most of the members of the Postal Committee of both houses of Congress have practically pledged themselves to vote for this proposition, which, reduced to its final financial working terms, proposes at least to quadruple the present rate of postage on the magazines alone.

We urge letters to your Congressman, your Senator, opposing this unfair proposition, and opposing any proposition for a change in the present rate of postage on "second-class" mail matter until an effective accounting and efficient reorganization shall have conclusively shown that a higher rate is necessary and just.

Write your Congressman and your Senator today, insisting on a square deal for the magazines, and urging them to oppose any discriminating legislation. Request them to favor a postal reorganization and a rigid accounting as the basis of any readjustment of rates. Insist on a square—and not a crooked—deal for all.

## THE WAY WE LOOK AT THINGS.*

I AM pleased to be here again, but my pleasure is mingled with some misgivings, for I fear that I have nothing new to tell you; were I of a scientific turn I could have constructed some fine theory last year and gallantly knocked it down this. There is a pleasing variety in science that is lacking in art. Art, moreover, is shy and so elusive of words that one never seems to get much more forward. You may well ask, why then, lecture at all? Well, I suppose it's a habit one gets into. Some consider it a bad habit; I don't defend it. It is certainly one that I do not encourage in others, for I never go to lectures unless there are lantern pictures —that's another matter. The optical

* An address delivered before the Royal Photographic Society, by Mr. Horace Mummery.

lantern has robbed the lecture of much of its terror, in fact it has given us the pleasantest means of acquiring knowledge that it is possible to conceive of. I have sat out lectures in my youth that chill my blood at the recollection, solid improving lectures, and when on occasion I have closed my eyes for a while—I could always think better like that—watchful friends would make unpleasant remarks. I have been often asked, what is the good of talking about art? not a very encouraging question for a lecturer, yet it is an interesting one, for it may be answered in three different ways, corresponding to three stages in the artistic career. The beginner, spellbound by the melodious words of Ruskin, answers, "Great good, indeed!" the conscientious student, "going through the mill," turns up his nose and says, "No good at all!" but people of ripe, mature judgment like you and me, admit that "There is some good in it." Putting aside the first of these answers, for it is well not to over-estimate the value of words, the other two, though diametrically opposed, are both correct according to the point of view. An artist not only follows a practical pursuit, but his trade may be said to be never learnt; there is, moreover, a period when technique and execution claim all his attention, then it is that words seem worthless. In practical matters art is helped but little by words, theory is hardly more useful to the artist than a disquisition on the law of gravitation would be to a juggler. But there is something deeper than technique, that is the reason for its existence, that condition of mind by which art is conceived, the recognition of the beautiful and the desire to reproduce it. There is something that *may* be helped by words and by every other stimulus that appeals to the senses. Whatever practical skill we may attain is only valuable as an expression of this mental condition. Art, after all, is only the expression of the way we look at things, an estimate, a standard of our own, made in an utterly different spirit to that of commercial life. We look out on the world and find it beautiful, at some hours supremely so, but the faculty by which we perceive this beauty has been developed and nourished by how many experiences, what music, pictures, poems, plays, and conversations, forgotten now perhaps? Nay, more, what sounds, sights, odors and sensations of touch and taste? for every sense has played its part. We are the sum of so many mingled feelings, from the merely animal pleasures of sun warmth, the touch of water and air and of pleasant surfaces or taste of food, to the highest spiritual suggestion of which our souls are capable—we never know by what gateway our dreams come to us.

This much by way of reason and excuse for this wandering paper. I only lecture in the hope that some suggestive word may be spoken, if not by me then by someone who may follow a word that may act as a stimulus to thought, for we are all apt to work too hard and think too little. It is unnecessary to point out where the artist differs from his neighbors in the way he looks at things. A tree which to him is almost human in its sympatnies, is to many but pleasant shade; to some, timber and firewood only. Yet the broad appreciation of beauty is a more common faculty than the cultured are willing to allow, and is found in the most unlikely places; there are probably no "mute inglorious Miltons," for great power always did and always will find avenues for its expression. But in these days of cheap education the capacity for producing art of medium quality seems almost inexhaustible. Here it is that the importance of an individual view of Nature comes in, for it is this which finally differentiates between artists, making the work of one art, and that of another

merely skill of hand. Yet it is not individuality that needs emphasizing today so much as rational ideas concerning it. We are, if anything, too anxious to be original, and the effort causes our exhibitions to fairly assault the eye. Where in an up-to-date gallery is the quiet, soothing corner in which love may be made or sandwiches eaten without pictured nightmares bringing fell indigestion or jealous doubt? The anxiety to so trade mark a picture that its authorship may be recognized at a glance across the gallery is fatal to delicacy and refinement and ends in extravagant methods and trickery. It is a melancholy spectacle to see a powerful draughtsman drawing carelessly and childishly under the impression that he is acquiring archaic *naïveté* and distinction; as for spots, dots, and stripes, imitations of Turkey carpets, mouldy walls, and faded tapestry, all such eccentric methods are out of place, for the aim should be to lose the means in the end. I cannot quote the exact words of Whistler, but he used to say that a picture was finished when the means by which it had been produced were no longer visible. The broken textures and sketchy appearance that some photographers aim at seem to me to show a bad tendency in their work. A genuine sketch is a beautiful thing; the painter with his hasty smudges of charcoal or dash of color often gets a quality that he is afraid to retouch, but some photographers, and painters too, for that matter, seem to love dash and roughness for their own sake as if they were desirable things.

I have seen the term "photographic sketch" used to cover some very sophisticated work indeed. Most of the faults committed by those other than beginners may be traced to this love of novelty. I suppose it is only the weaker side of the modern spirit of inquiry. Any failure resulting from honest experiment is to be respected, and I should be the last to discourage any seeker after new ideas, but I am getting to loathe the would-be original work that is strutting around forcing itself on the attention.

Looking back over the many schools and styles of art, it seems as if the days of great discoveries were past. On comparing the work of Turner and Corot, for instance, it appears incredible that another period will come when two such wonderful and dissimiliar views of nature will be possible; however, we can set no limitations to the future. At any rate, here in this present we ordinary folk—I hope you do not mind being called ordinary; should anyone, however, object, he may apply the epithet to his neighbors, like we do at church when miserable sinners are referred to—with the rank and file of us, individuality is expressed more by delicate variations than by strongly marked differences, and the undue striving for distinction destroys rather than strengthens the personal flavor. The picture whose interest depends on clever style falls flat as soon as the eye gets used to the novelty or sees through the trick. We are continually taking up new work with enthusiasm, then after awhile dropping it; popularity is short-lived now. This is due to a lack of something in the artist more than the fickleness of his public. Many artists are striving not to *express* but to *advertise* themselves. My experience of art schools convinces me that it is the feeblest students that are the most anxious to cultivate style; it is their want of personality that urges them into the search for it; it is a confession of their own weakness. This soon leads to conscious or unconscious copying. When it is the spirit of another's work that attracts us, we may absorb some of that which we admire and make it our own, but when fascinated by style we do not absorb but merely lift. Pho-

tography, I think, suffers a great deal from this copying and following of strange fashions, especially among the younger workers. Anyone who has thoughts of his own will find a way of expressing them; this is style; it may not be so different from other people's work as to be apparent at a first glance, but the interest grows as we detect the personal view. Is there anyone here who has not at some time passed over work that eventually charmed; we probably began so with the work that has influenced us most. Eccentricity has become a disease in modern art; to be bizarre and if needs be beastly is the surest way of attracting notice; there is a section of criticism looking out for this class of work. The critical form known as an "appreciation" that has been much in vogue of late years is often mischievous in praising the worst side of the artist's work.

The praise also is usually too freely bespattered and too easily won. There is a sense of proportion lacking in our artistic and literary judgment. We English have become a race of patent medicine consumers, and I think we have studied the labels and advertisements too closely. There must always be some confusion in matters of taste, especially in art, where the inferior or spurious article serves equally well as the best to those who enjoy it. In the ordinary affairs of life, say, for instance, the choice and purchase of potatoes, there is not this uncertainty, for there are definite standards by which potatoes may be judged, though there are differences of opinion as to the best varieties, and greater difference still as to the way they should be cooked, happy homes having been divided on the question of waxy or floury. But in art the veriest daub is a picture to those whom it satisfies, and is to them on a perfect equality with a Titian or Velasquez. Whistler divided pictures into "art" and "not art," an excellent division, but as we all draw the line for ourselves it does not simplify matters. I am specially interested in landscape, and though I may be an extremist, perhaps a partisan, I can honestly say that I am interested in everything from the bits of blue distance cunningly tucked between the saints of the early Italians right down to Monet. The interest never fails where the artist honestly attempts to portray what he sees and feels. This sounds dreadfully old-fashioned, but there is as much need for honesty of purpose in art as in anything else. Confusion becomes more confounded when the artist steps out into the limelight of the interview and explains his motives—if he really had any, explanation would be unnecessary. There has been much said about the glamour of art; now we're having the clamor of it. I dare say that most of you have had that peculiar sensation of having said and done certain things before in some past existence; I have that feeling now, I feel that I said all this before in my last year's address. A distinguished author remarks, "Everybody has at least one book in him;" well, I have one lecture.

It is interesting to note some of the changes that have taken place in man's way of looking at things; compare the painting of the Italian Primitives with that of today, how utterly different the outlook is to ours, how neat and small nature seems, but really the world was bigger then, an unexplored wilderness of vast distances. Yet they had no notion of how to represent this vastness; in fact, they seem to have taken no interest but in their own home corner. Modern art has learnt scale, for it knows the value of mystery. The old precision in form and abundance of detail have a clarity and romance of their own, but the spaciousness and mystery of light and air are a modern

discovery. Painting has moved gradually from the definite to the indefinite. Photography in the comparatively short span of its existence has passed along the same road. The early painter with his sharp detail and unshaded local color was governed by his knowledge of what things really were. Painting has grown out of the struggle between semblance and reality. The child still repeats the history of the race, drawing a full eye in a side face like an ancient Assyrian, and is keen-eyed for all the minutiæ. This tendency to represent what we know is there with the unwillingness to miss anything out, is one that seems to recur in individuals and schools; it is a reaction from Impressionism or the seeing of effect. Pre-Raphaelitism was just such a movement; what effect photography may have had on it I am unable to say. It was a revolt against the generalization and conventions of the day; this was the attitude taken by the early photographer also, who was a reformer with a vengeance, ready to tumble the whole temple of art about the ears of the worshippers, and to teach the world at last how to see. But now his aim is to bring his lens to the broader vision of the trained eye.

The desire for simplicity of expression and for rendering not only the calm even light of nature, but the many varying moods, usually transitory, that we call effects, has marked the progress of art. But here again, as in style and individuality, it is not the desire for breadth that needs encouraging just now, but a better understanding of what breadth really means. Art has been threatened for some while past, especially in photography, by a very empty and meaningless Impressionism. I say especially photography, because the kind of work to which I refer might be justified by a fine display of color; without this attraction it is purposeless. To make this charge clearer let me touch for a while on the subject of Impressionism. Breadth, though it has become almost a catchword with the up-to-date student, is not by any means a modern invention; Holbein knew how to be broad with a large quantity of detail, and Velasquez simplifying his detail is certainly the great master of broad yet perfectly full painting. As for Rembrandt, he may be claimed almost as an impressionist in his etchings and sketches.

But the movement bearing the name of Impressionism is a modern one, and may be said to have begun with Turner. Wilson, who was his forerunner, was majestically broad, yet was not impressionistic in the sense that Turner was. Take, for instance, a typical example of Turner's last manner, that beautiful picture, "Rain, Steam, and Speed;" here is something that at the time of its production was absolutely new in art. The painter has chosen a subject which by the canons of art, at any rate then in force, is by no means inherently beautiful. The bridge, a straight unfeeling piece of engineering, and the rushing train seem utterly out of place in a fair and ancient valley, but they are made the subject of a picture not for their own sake as being beautiful or lovable in themselves, but as the expression of an idea. It is the contrast of the new with the immeasurably old, the struggle of civilization against the wild, and so the wind blows, but the train dashes on, its white steam drifting with the scud of rain, then comes a flash of wandering sunshine, and lo! there is a poem! To have drawn in ordinary fashion the trim bridge and mathematically true metals would have been to utterly miss the purpose of the picture, and so the artist has softened the hard lines that we may not by realities be drawn away from the spirit of the scene.

The treatment of the natural features is also of the broadest, because it is the storm that is essential, the storm pitted

against speed. Hitherto men had chosen the picturesque, something acknowledged worthy of representation and which, skilfully reproduced, could draw forth interest, wonder, and delight. Though Turner treated in this impressionistic style some of the most perfect scenery in the world, quite unspoilt Nature, yet I regard impressionism as largely the outcome of modern life which has introduced so much that is unpictorial and ugly. But the common, the familiar, and the ugly are often by association beautiful, and may be made pictorially so by a broad free treatment aided by the play of light and shade, and that airy veil of magic and mystery which is cast by Nature over the imperfect work of man. We, who are dwellers in this great desert of bricks and mortar, "gray miles long," as a poet sang, are never more happy, perhaps, than when rushing away from our workhouse into the wilds; yet is there any view to be seen from Alpine summit, any stretch of boundless ocean, or far-reaching plain, that is more impressive, that snatches more at the heart, than a view of London, with its pathos and the beauty of its ugliness, seen from some height looking down upon its million housetops? That sea of roofs, with light and atmosphere, shadows of flying cloud and veilings of smoke, or, under the night sky with the yellow stars of its streets paling the stars of the firmament, what opportunities are here for endless pictures? London awaits a master. But treated literally the subject is poor enough; there must be sufficient impressionism or breadth to allow the effect of the whole to triumph over the ugliness of the parts.

To sum up, I regard impressionism as an attempt to portray the beauty of effect; this is expressed in painting by color, in monochrome by chiaroscuro, and it is also a portrayal of motion whether in man or in nature. It is the capture of something which is not constant but lent only for a while, some fine quality which the careful and finished representation of the object or scene would miss rather than realize which is to be striven for as *the* picture seized, whatever else be missed. To make a true impression is one of the most difficult problems in art, but, unfortunately, any duffer with a little practice can make sham ones. Impressionism is only possible to those whose experience enables them to distinguish between essentials and non-essentials; the sham variety is marked by the wholesale rejection of detail merely because it is detail. It is popular in the art school because of the facility with which it may be acquired, the reason for its prevalence in photography I will leave you to decide. It is well to remember that not only are there many objects which are beautiful and interesting on account of their detail, but that everything must have detail enough to explain its construction, texture, or nature. A near tree in any picture by Corot, however broadly painted, is always a leafy thing; the mystery of Turner's distance, however simple and big, contains the suggestion of fields, hedgerows, trees, and all that goes to make up the landscape.

Turner is the greatest impressionist because his power of suggestion is the richest; many of his pictures seem unreal to the beginner, but the student finds them, though often slight and unfinished, always complete. I see some photographs which strike me as mistaken efforts, I imagine, beyond the limits of the process; I feel on looking at them the lack of color; there should be in a monochrome the suggestion of color; at any rate it should be satisfying as far as it goes; a good photograph does this when not printed in some fancy shade of brown or green; true values rendered in black or any quiet neutral tint are always convincing. It seems wrong to cast away

so carelessly the delicate and accurate drawing of the camera for a very questionable advantage. In aiming at breadth it is difficult to avoid generalization; if there are tones in various parts of the picture of the same value and quality it is a sure sign that too much has been rejected; we have exceeded our powers, perhaps our medium. There is a certain qualityless shadow in photography that strikes the draughtsman as very empty; this occurs in the class of work that I have been speaking of. I assume that photographers have got used to it like we have to overhead tram wires and motor cars.

Breadth is a necessary quality in pictorial art, but impressionism or extreme breadth seems suitable for or limited to certain effects, a certain quality is emphasized at the expense of others; this must be sufficiently interesting in itself to make up for the loss of the rest. But impressionism is often cultivated without any regard to fitness of subject. The broad treatment of a scene simplifying as it does the values by losing minor distinctions of tone is liable, unless carefully done, to run the masses too much together; the question is how far we can afford to do this? for a certain amount of relief and contrast are necessary. In avoiding the kind of picture which jumps out of its frame, which is always so popular, we must not fall into the other extreme of flatness. So many curious things have been done lately apparently in imitation of Japanese art that it is time to reflect how different from ours are the outlook and aims of this wonderful people. Though we may appreciate and learn much from them, I do not think the Western artist will cease to see things in three dimensions; depth will always be a delight to him; in speaking of depth we are bound to think of Rembrandt, Turner, Corot, and all the great masters of space; in fact, take depth away and the charm of Western art goes with it. How tired we are getting of a few flat washes of color bounded with a pen outline, or of pictures consisting of two or three tones.

(To be continued.)

## THE INFLUENCE OF THE OLD MASTERS.

BY GEO G. ROCKWOOD

I HAVE always protested against the tendency to imitate the old masters (literally) rather than be influenced or educated by them. Many photographers have not differentiated between the two sentiments. I have been in thorough sympathy with what seems now, among the advanced photographers, to be a successful effort to remove portrait photography from the realm of genre composition to the simple forms of the old masters. There has been for years too much of a tendency to unite or blend the art of portraiture with the genre or composition school, and to such an extent that accessories have more than divided the interest with the figure or subject of the picture.

It is not unwise at times, especially with children, to make a story telling picture which would prove of value when the photograph has ceased to be of interest as a portrait. Some of my pictures of this nature, such as "A Possible President," "Fine Feathers Make Fine Birds," "Sunshine and Shadow," "Two of a Kind," etc., have run into editions of a half million copies,

and I do not propose by any means to lose interest in this branch of our art; but in treating adults, and especially representative men and women, we have resumed efforts in the line which we began many years ago in the days of our distinguished French artist coadjutor —M. Adam Solomon, of Paris, who has no successor.

Since then, travel, study, and the development of art culture and training of the public, enable a large number to appreciate the most ultra-artistic effects possible in photography. In a word, this treatment means, to not only subordinate everything to the portrait, but to go a step farther and subordinate everything in a portrait to the head or likeness alone. Rembrandt, when he painted a portrait, used a skylight less than two feet square. In this beam of light he placed his sitters, and, as may well be understood, nothing could be seen but the head in this manner illuminated. There was nothing to divide the interest or distract attention from the portrait. The work of no other master has ever equalled his portraits.

In this line I have for a long time worked, till now there is a positive demand and appreciation of this new-old-style of portraiture. By this manner is developed the strong personality, character, and beauty by the human head, and in but a few cases have I failed to find it complimentary.

## NEWS AND NOTES.

The photographer who makes portraits with all the comfort and convenience offered by the up-to-date studio may well sympathize with the photographer who undertakes to secure "at home portraits" of the peregrine falcon. This is C. J. King's account of how it is done:

We put up a tent, from which to watch the eyrie and gain what information we could as to the doings of the parent birds.

This was no easy matter on this almost perpendicular rock face. However, we found a shelving position at an angle of about 45 degrees on to which we got the base of our tent, which, I ought to mention, was specially made for bird watching. Having placed it in position and heavily weighted it with any flat lumps of rock which we could find, we roped it to the rock pinnacles above, and left it, in a kind of half-resting, half-hanging position, about thirty feet from the eyrie. Previous to this, however, we had painted it as much like the surrounding rocks as possible, so that at a short distance it simply looked like a shoulder of the cliff. After a day or two we returned, and the doctor, one of the keenest bird photographers living, got into the tent, focussed his camera on the centre of the eyrie, and after taking in sufficient provisions for twenty-four hours, was tied up and left.

What Dr. H. saw that evening and during the early hours of the next day is another story, but it was, I believe, what no human eye had ever seen before. Next evening at six o'clock we relieved him, and from then up to the time that the young birds were able to fly we took photographs at intervals of a few days.

It may be well imagined that it is not particularly comfortable cooped up in a tent 8 ft. by 3 ft. by 3 ft., on a sloping rock overhanging the sea, for twenty-four hours at a stretch, but the reward comes in the form of observations which have never before been made, and in

a series of photographs which are at present almost if not quite unique.

*Professional Photographers' Society of New York.* Another section of this society has been formed, and will be known as the Southern Tier Section, the counties along the Pennsylvania line.

The first meeting was held in Canisteo, and Mr. A. B. Stebbins, of that city, who it will be remembered won the fifty dollar prize offered by the Society two years ago, with a practical cement sink, was elected chairman and Frank E. Hewitt, of Corning, secretary and treasurer. A. McFarland, of Elmira, and A. B. De Groat, of Bath, were named as an executive committee. The opening meeting was attended by President H. A. Bliss and Secretary Howard D. Beach. The next meeting will be held in Corning.

Judge Goff recently refused, in New York, papers of incorporation to several organizations on account of the incongruity of the names selected. One name rejected was "The Pirates," who desired to incorporate for social and civic purposes. They seem to need a judge with the same sense of fitness out in Iowa, where there is an organization of prominent photographers known as "The Seven Thieves." The members of this organization, we happen to know, are gentlemen who have nothing whatever of the characteristics of the title. There are, however, some photographers who, organized under this title, might be taken seriously.

## NEW BOOKS.

An important new book on Optics, reviewed by Henry A. Judge, S. J., of Fordham University, New York:

*The Principles and Methods of Geometrical Optics, Especially as Applied to the Theory of Optical Instruments.* By JAMES P. C. SOUTHALL, Professor of Physics in the Alabama Polytechnic Institute. Pp. xxiv + 628. $5.50 net. New York and London: The Macmillan Co.

There is, perhaps, no branch of physical science in which greater advances have been made than the study of optics, and accordingly there are no instruments in which greater improvements are apparent than in the microscope, the telescope, the photographic objective, and other lenses. One need but compare the older works with the new, the earlier instruments with the later. Witness, for example, the crude notions of the earlier writers concerning the reflection and refraction of light, as contrasted with the latest refinements of science. Newton, in his *Opticks*, conceived that a ray of light underwent a change of disposition so that at one time it was inclined to be reflected, at another to be refracted. The returns of the first disposition he called its "fits of easy reflexion," and of the second its "fits of easy transmission," and the intermediate time "the interval of its fits." "If any sort of rays," he said (Prop. xix), "falling on the polite surface of any pellucid medium be reflected back, the fits of easy reflection, which they have at the point of reflexion shall continue to return . . . and between these fits the rays shall be in fits of easy transmission." It was his failure to perceive the phenomenon of the irrationality of dispersion, which led to his dispute with Lucas of Liege. The latter endeavored to repeat Newton's first prism experiment and obtain a

spectrum whose length was five times its breadth. He wrote to the English scientist telling him that he could not possibly get a spectrum of length more than three and a half times its breadth. Newton persisted that if the experiment were properly performed he would obtain the specified results. There can be no doubt that the difficulty arose from the difference of the glass of which the prisms were made. Today the optical properties of all known vitreous substances are studied and large numbers are catalogued by the Glasstechniches Laboratorium of Jena.

In Germany the science of optics has made great advances, and the remarkable works of Abbe, Czapski, Gauss, von Seidel, Petzval, and others, are unapproached by anything which has appeared in English. The work of Czapski, *Die Theorie der optischen Instrumente nach Abbe*, important as it is, was an incentive to Dr. M. von Rohr, in collaboration with the optical engineers of Carl Zeiss of Jena to issue a still more important and really standard work of a similar title.

It is a lamentable fact that no complete work on geometrical optics has as yet appeared in English, and it was with a view to apply this deficiency, and to encourage the pursuit of this important branch among English speaking people that Prof. Southall composed his book. The study itself is most attractive, so much so, in fact, that we imagine that the student of mathematics will find therein a most enjoyable recreation and most profitable application of his abstract principles of trigonometry, calculus, analytics, and modern geometry. Furthermore, the results which naturally follow from the cultivation of such a branch are of a far-reaching character. The reader is stimulated to devise something better than what he sees; he wonders if another combination would not produce better symmetry, greater rapidity, less dispersion, whether it would not be profitable to make the photographic lens achromatic with respect to the Fraunhofer F. line and the violet line in the spectrum of mercury rather than with respect to the colors corresponding to the lines D and G′ as is usually done. Some of the best instruments extant are the fruits of theoretic reasoning, and the present treatise is designed to be a reference work for the practical instrument maker.

Were we requested to suggest some improvement we might, perhaps, propose for consideration whether it would not be advisable to smooth the way for the busy man by giving in every case the intermediate steps in the mathematical operations. This is generally done, but we met one or two cases of deductions which, though easy enough to the professional mathematician, would, we fear, puzzle the ordinary computor who has forgotten much of his calculus, and cost him hours of involuntary toil.

In accordance with the declaration which he makes on the subject, we hope that Mr. Southall will be induced to write special and separate volumes on the telescope the microscope, the photographic objective, etc., and the eye.

*Under the Roof of the Jungle*, a book of Animal Life in the Guiana Wilds, by Charles Livingston Bull, with sixty-four full-page plates and many minor decorations from drawings from life by the author. 271 pages. Decorative binding. Price $2.00 net. L. C. PAGE & CO., Boston, publishers: This is an interesting and useful account of a long visit paid to a much neglected corner of the world. Mr. Bull was equipped with little else but sketch books and color box, and "wandered through the jungle, the colorful, the splendid, weird, living jungle." After reading of all the strange and uncanny beasts, birds, and reptiles that the author describes so well with

pen, pencil, and paint-box—some of the colored plates show the wonderfully vivid colored birds and reptiles of that part of the world—we felt equally as well pleased that it was he and not us who had done the wandering. It is an entertaining and realistic description of life in the heart of a tropical jungle. The illustrations are quite unusual and very well done, and show an array of subjects that are not to be seen anywhere outside their native jungle.

## TRADE NOTES.

We have just received a copy of Gennert's New Catalogue, No. 62.

This catalogue contains a well-defined and complete list of all photographic requisites for both amateurs and professionals. It is printed on an excellent quality half-tone paper, showing all cuts and type matter advantageously. It is profusely illustrated and every article is fully and comprehensively described. The cover is very artistic brown with a tasty design in green and black. Any reader sending a request for a copy to G. Gennert, 24-26 E. 13th Street, New York, and 16-20 State Street, Chicago, mentioning this magazine, will receive one free of charge.

---

The Olson Magnesium Photo Printer, for the professional photographer, is an entirely new method of photograph printing. It will be well understood that a magnesium ribbon is superior to any other light for photographic printing purposes. This new printer combines absolute uniformity of exposure, simplicity of operation, and an extremely moderate selling price. The chief advantage in the use of the new model is the incorporation of an automatic device using magnesium ribbon for illumination. Of all the illuminating agents magnesium ribbon is the surest, as it is not affected by the fluctuation of current as is the electric lamp, or by the uncertainty of the Welsbach lamps, due to uneven pressure of the gas mains. Neither does it have the objectionable features of the prolonged exposure incident to oil illumination. The magnesium ribbon is fed automatically by means of a simple gauge attached to the printer. The exposure for a negative can be absolutely determined. When the length of exposure has once been determined by test strips of paper and the gauge set, any number of prints can be made from the same negative with the absolute assurance that every print will receive exactly the same exposure. The ribbon is fed between a roller and a spring and forced through a flat tube. The tube in turn is swung over a lighted alcohol lamp which ignites the ribbon. The ribbon burns to the end of the tube and goes out and is then ready for the next exposure.

The machine is small and compact, occupying very little room on the work bench. The manufacturers absolutely guarantee to fulfill every claim made for this printer. They are making a special 30-day offer of the $12.00 machine for $10.00, cash with order. It will not cost much to try this machine, and your money is refunded if machine is not satisfactory. Address the Olsen Photo Machine Co., Plattsmouth, Neb.

---

Many of our readers are already happy possessors of the Complete Self-Instructing Library of Practical Photography so they need read no farther, but to the reader who has not yet investigated this great work we would point out that it removes all necessity for experiment—eliminates the cost of aimless attempts. It gives the formula for every condition—teaches how—explains carefully— then takes an actual picture and points out the way so that you cannot go wrong. If you could get together all the world's greatest photographers—have each one at your immediate service—you could not learn easier or more quickly than through this magnificent, detailed, and graphic course of training. The first step is to get the Library right in your own hands and prove to your own satisfaction that through it you can increase your photographic profits many times your investment in this training. Consider the satisfaction of getting practically perfect prints. The American Photographic Text Book Co., 360 Adams Ave., Scranton, Pa., ship, by prepaid express, the complete sets of the new "Popular Edition," ten volumes on five days' approval for examination, and we suggest that you write at once for their beautifully illustrated catalog, which tells how you can pay for your set, as the books pay for themselves.

---

There seems to be an impression that the Photo-Auto Press is a machine intended for quantities of duplicate work like post-cards in large editions. This is not the case. This machine in the 8 x 10 size has all the necessary facilities for printing from portrait negative. It will give accurate register for double printing, masking, fancy borders, etc. It is an all-round machine and will do all kinds of work from various sized negatives. Whether its an order of four prints or four hundred it is a great time saver and absolute uniformity is guaranteed. Its a machine to investigate.

---

The out-of-door photographer will be interested in the new view outfit which the Seneca Camera Co. has just placed on the market. It is a moderate priced camera and can be used either indoors or out. Its name is the Competitor and it has some very decided advantages. The Seneca Co., to prove their faith in this new instrument, are prepared to send you one on a ten days' trial.

# WILSON'S PHOTOGRAPHIC MAGAZINE

A MONTHLY MAGAZINE FOR PRACTICAL PHOTOGRAPHERS

Founded in 1864 by EDWARD L. WILSON
MRS. EDWARD L. WILSON, Publisher and Proprietor
T. DIXON TENNANT, Editor

EDWARD L. WILSON, 122 EAST TWENTY-FIFTH STREET, NEW YORK
*Entered at New York Post-office as Second-class Matter*

Yearly subscription in advance, United States and Mexico, $3.00; Canada, $3.25; Foreign Countries, $3.50. Single copies, 25 cents. Subscriptions begin with current issue unless otherwise ordered. Original manuscripts on photographic subjects are solicited, and, if accepted, will be paid for on publication.

## EDITOR'S TABLE.

WE congratulate Brother Abel on the very great improvement in *Abel's Photographic Weekly* since he reduced it to regular magazine size. Always a most interesting sheet; in its new form it reaches our desk in an inviting and dignified condition and is much more easily read and handled; the illustrations come out well and we are sure that its many readers will enjoy it even more than before.

---

WE notice that the punctilious editor of the *Photo Era* has been patting the editor of *American Photography* on the back for falling into line in lifting Boston out of the provincial class and referring to it as "Boston, U. S. A." Evidently Boston, Mass. is not the proper thing. Why don't they move to New York and then they could drop the "U. S. A"?

---

As we go to press we hear that President Harris of the P. A. of A. has secured the services of Rudolph Duhrkoop, who will act as instructor in the School of Photography. President Harris could not have secured a better "attraction" for the St. Paul Convention, and a record attendance is assured. Herr Duhrkoop is so thoroughly capable of imparting useful knowledge on all branches of protraiture that it is unlikely that any other instructors will be engaged.

---

A SPECIAL Legislative Committee recently held hearings in New York on the question of insurance. The wide awake Photographer's Club of New York seized the opportunity to make a strong protest against the excessive fire insurance rates that photographers are charged and for which there is no justification. The club was ably represented by Mr. Oliver Lippincott and Mr. Mandelkern. This is a matter of considerable importance to all photographers, and it is surprising that the Metropolitan Section of the P. P. S. of New York did not seize this chance to secure a more favorable rate of fire insurance. The fact that some of its members are located in fire proof skyscrapers seems a poor excuse for neglecting the interests of the less favored majority.

---

THE Albright Art Gallery has added to the permanent collection of the Buffalo Fine Arts Academy twelve prints which were hung in the November exhibition of pictorial photography, and also eight prints by D. O. Hill, a gift to the Academy from Alvin Langdon Coburn. The works acquired by purchase from the pictorial photographs are: "The Bird Cage" and "Two Portraits Group," by D. O. Hill; "Lombardy Plowing Team," by J. Craig Annan; "Still Life," by Heinrich Kuehn; "Dresden China Fan," Baron de Meyer; "Cadiz," Alvin Langdon Coburn; "Arthur and Guenivere," Frank Eugene; "The Manger," Gertrude Kaesebier; "The Painter," George H. Seeley; "Moonlight Impression from the Orangerie," Versailles series, Eduard Steichen; "The Street," Fifth Avenue, Alfred Stieglitz; "The Chiffonier," Clarence H. White, and "Garden of Dreams," by Joseph T. Keiley. All these prints and the eight given by Mr. Coburn have been hung together in gallery No. 12, which they fill completely, making an attractive little gallery devoted to works in the one medium. The Hill prints given by Mr. Coburn to the Buffalo Fine Arts Academy are: "J Henning and Handyside Ritchie, A Portrait," "The Reverend J. Julius Wood," "Edinburgh Castle," ''John Knox Home," "The Harbor," "Fishermen," "New Haven Fisherman," "The Boy."

Portrait of a Man

By Charles L. Peck, Buffalo, N. Y.

# WILSON'S

# PHOTOGRAPHIC MAGAZINE

FOUNDED IN 1864 BY EDWARD L. WILSON

VOL. XLVIII MARCH, 1911 No. 651

## CONCERNING RECIPROCITY

RECIPROCITY is receiving its share of big headlines in the newspapers at the present time, but with that particular brand of reciprocity we are not at present concerned.

We are referring to the reciprocity shown at the recent meeting of the Professional Photographers' Society of New York. It was very much in evidence, and the givers and takers were evidently getting much satisfaction out of the exchange.

The Society was founded for just this purpose—to arrange an exchange of ideas, good fellowship, fraternalism, mutual help and encouragement. The man from "up State" was glad to see what the city man had to show him, and there were things the city man could learn from his country friend.

The old idea of trade secrets, the selfish method of keeping to yourself any good idea that you had found helpful in your business, is happily going out of fashion. The new and better way is to publish the idea broadcast and show your so-called rival the thing that has helped you and may help him.

It cannot be too strongly stated, it was pointed out at one of the meetings, that photographers are not the rivals of photographers. The photographers' rival is the man who is trying to exchange a luxury for the public's surplus cash. Music, entertainment, jewelry, books, and the hundred and one things that we don't need but can be persuaded to buy—these are the things the photographer has to compete with. The photographer on the next block may be cutting prices, but that is only his misguided method of getting someone to spend some money on photographs.

Make friends with your fellow photographers. You will get more business by working together than fighting each other. Exchange ideas and experiences; something can be gained on either side.

One of the enjoyable features of the New York Society's meeting was the splendid collection of German pictures—just another example of reciprocity. The biggest feature of the forthcoming National Convention, to be held at St. Paul, Minn., in July, is the School of

Photcgraphy, with Rudolph Duehrkoop in charge. A few years ago Mr. Duehrkoop visited this country, and was much impressed by the fraternal reception that was accorded him. Now that he has become one of the most famous photographers in the world, he comes back, and will give freely of his knowledge to his fellow-workers in this country. This is the sort of reciprocity we would urge you to become interested in.

Get acquainted with the photographers in your town, form a local association, section, or club. Join your State organization and join the National Association. It can't do you any harm, and can do you a great deal of good.

## PROFESSIONAL PHOTOGRAPHERS' SOCIETY OF NEW YORK

THE Professional Photographers' Society of New York held its seventh annual meeting at the Park Avenue Hotel, New York, February 15, 16, and 17, and added another substantial success to the six already recorded.

The splendid program of events laid out by President Bliss was carried along in great style and carried out as per schedule. The change in the date, moving the meeting forward from April to February, was endorsed by an increased attendance. The associate members, from all parts of the country, were there in great force and great enthusiasm marked the entire proceedings.

President Bliss scored a big success with the magnificent collection of German photographs, which were greatly admired and much enjoyed. The photographs exhibited by the members of the Society were above the average, but naturally the interest was centred in the German exhibit.

The lectures and demonstrations were unusually practical and interesting, and were closely followed.

So well pleased were the members of the Society with President Bliss' two administrations that they reëlected him for a third term Mr. E. B. Core was made First Vice-president; Mr. B. J. Falk, Second Vice-president; Floyd Baker, Treasurer; and A. C. Kalt, Secretary.

The good fellowship dinner, as usual, was the grand climax, and is quite one of the most enjoyable reunions of the year.

### FIRST DAY.

At nine o'clock the exhibition of pictures was opened and many took advantage of the hour and a half before the convention was opened by President Bliss at 10 30 Ex-President Bradley welcomed the members to the city and Vice-President Hale responded. President Bliss delivered an address recounting the work of the year

Formal and routine business was then transacted and the reports of the following Sections were read:

### METROPOLITAN SECTION.

*To the Professional Photographers' Society of New York:*

During the past ten months Metropolitan Section No. 1 has had a most successful period, having increased its membership by over 50 per cent.; 22 members were admitted since the last annual report, the membership at that time being 38; there have been five resignations, our total membership being at this time 54; and, in addition thereto, three petitions for membership have been received.

Seven regular and one special meeting have been held, all of which have been well attended. Four of these meetings were held in a well-known chop house preceded by a Dutch treat supper, and three were held in studios.

The special meeting, which was held on December 12, 1910, was a call to consider the reintroduction of the proposed amendment to the State law. A Committee on Legislation was appointed as follows: Messrs. Pirie MacDonald, Falk, Marceau, Baker, and A. F. Bradley, these being the members who did such good work the previous year, and whose labors would have been crowned with success had it not been for the Governor's veto. It is now hoped that, with a new Legislature and a new Governor and the coöperation of the Sister Sections this amendment will be successfully passed.

We have sustained a sad loss in the death of one of our members, Mr. Geo. H. Rockwood, and our sincere sympathy is with Mr. George G. Rockwood, through his vale of sorrow.

Chairman Bradley is making our meetings both interesting and instructive, by having well-known men, who are leaders in their various professions, give talks to the members. Prof. Geo. B. Bridgman, of the Art Students' League addressed our last meeting, and his talk on artists and their work was appreciated by all present. The members derive a great deal of good from these practical talks.

That the Metropolitan Section is ready and willing at all times to aid and assist the State Society was shown by its members in the cheerful manner they responded to President's Bliss' request to pay the State dues in advance; by also donating the $50.00 gold prize which is to be awarded at the State meeting.

Respectfully submitted,

A. C. KALT,
Secretary-Treasurer.

BINGHAMTON SECTION.

The year just closing has been very successful in our Section.

Our meetings have been held the last Tuesday in each month, showing an average attendance of 70 per cent.

This is truly praiseworthy, as two of our ten are out of town members.

These have not been strictly business affairs, for pleasure has been combined with them, until we have come to understand each other better, and have grown into a large family, with good cheer to all.

In May we first tried coöperative advertising, but only on a small scale. We were like unto birds in a nest, afraid to fly, but sat huddled together, awaiting—what? Why, results.

They came, and by this time we were stronger.

In October we hired an experienced ad. writer, and contracted for an 8-inch ad. in the largest daily paper for two months. We did not await the merchant, but called attention that "*now* was the time to get your pictures for Christmas; *now*, while the light was good, bring the baby in; *now*, while the weather is fine, have made those long delayed photos of grandfather and grandmother; and *now—now* is the time to have your picture taken."

The results were manifold. Not only were we able to make more and better pictures, but the rush and worry of the last minute eliminated, both to our patrons and ourselves.

Instead of our regular October meeting, a Hallowe'en party was held at the Surdam residence, which was much enjoyed by the members and their wives.

During our two busy months no meetings were held.

In January we met and planned work for the ensuing year, one of the branches of work—a quiz department—

a quiz master appointed to answer questions sent previously.

This will enable us to answer those little perplexing questions which sometimes arise.

Section 8 can truthfully believe in the old adage: "There is no great loss but there is some small gain." While we have lost two members during the year, by resignation, we have also gained three.

MABEL COX SURDAM.

### GENEVA SECTION.

In response to a letter sent out by Messrs. Hale and Tuttle, of Geneva, the following photographers gathered at the studio of Mr. Hale this afternoon: H. W. Le Clear, of Waterloo; L. P. Standen, of Seneca Falls; H. B. Tuttle and J. E. Hale, of Geneva; Mr. Orvis, of Oaks Corners; Mr. Crocker and Miss Stewart, of Canandaigua; and R. E. Briggs, of Clifton Springs. President Bliss and Secretary Beach came from Buffalo to attend.

State Secretary Howard D. Beach, of Buffalo, gave a very helpful and interesting demonstration under the skylight, making negatives of all present.

President Bliss and Secretary Beach brought from Buffalo an exhibit of prints which were criticised by Mr. Beach.

Mr. Bradley and Mr. Robinson also sent in prints for the exhibition.

The meeting was then called to order by President Bliss, who stated that the business of the meeting was the forming of a Section of the Professional Photographers' Society of New York. Each one present was then called on to state his or her view on the subject, and it was finally voted on and carried unanimously to form the Section.

The meeting then proceeded to elect officers as follows: Chairman, H. W. LeClear, of Waterloo; Secretary-Treasurer, R. E Briggs, of Clifton Springs; Executive Committee (three years): J. E. Hale, of Geneva; (two years) H. B. Tuttle, of Geneva; (one year) L. P. Standen, of Seneca Falls.

It was moved and carried that the Section be called the Geneva Section of the Professional Photographers' Society of New York.

All present signed the charter roll and paid State Society dues for 1911.

Messrs. Hale and Tuttle extended an invitation to the members to lunch with them at a nearby restaurant, which was accepted.

A rising vote of thanks was then given President Bliss and Secretary Beach for their kindness in attending the meeting.

R. E. BRIGGS,
Secretary-Treasurer.

### CENTRAL SECTION.

Central Section held the usual number of meetings during the past year, and the attendance of the members has been good.

We have met at the studios of the members living in Troy, Albany, and Schenectady.

During the year we have had several meetings at which prints or negatives have been brought for suggestions and criticism.

The members attended in a body a lecture by H. Snowden Ward, the English lecturer on "Photography," which was given last month.

During the summer an outing was held at Lake George, attended by the members and their wives. The day was ideal and a great time reported.

Central Section would like to exchange prints with other Sections, and would make the suggestion that a committee, made up of one or more members from each Section, be appointed to carry the idea out.

Central Section can report a successful year, both as a society and in a business way.

Respectfully submitted,
H. B. LITTLE,
Secretary-Treasurer.

During the afternoon Hallen's Tungsten Light apparatus was demonstrated. Negatives were made with this light by Messrs. J. H. Garo, Hallen, Beach, and Frank Scott Clark.

In the evening Robert Frothingham, advertising manager of *Everybody's*, gave an interesting talk on advertising, and Oliver Lippincott an illustrated lecture on "The West."

SECOND DAY.

J. C. Abel, of *Abel's Weekly*, gave an interesting and instructive talk on advertising, showing by lantern slides good and bad examples of advertising and business stationery.

J. E. Mock gave a good illustrated talk on "Backgrounds," and Pirie MacDonald an interesting talk on prints by various photographers, thrown on the screen by the stereopticon.

The afternoon was given up to studio demonstrations by Frank Scott Clark, F. Milton Somers, A. F. Bradley, Dudley Hoyt, and Pirie MacDonald.

In the evening many of the members and their wives attended the annual entertainment and ball of the New York Photographers' Club and a good time was had.

THIRD DAY.

The morning session began with the demonstration for the fifty dollar prize. E. B. Core, Jr., showed a reflex camera with an arrangement for focussing and making the exposure from the side of the camera. E. A. Bass showed a good idea for submitting proofs—mounting six on a folder, to make sure of the return of all proofs. J. T. Selby showed a paper-holding machine somewhat on the order of the film pack. J. E. Conklin, a shutter, and Oliver Lippincott a patent skylight. The prize was almost unanimously voted to Mr. Core for his camera. Reports of various committees were read, and the officers elected as above.

In the afternoon the members gathered at the Metropolitan Museum of Art, by special invitation, when the famous painter, Henry Mosler, gave an interesting talk on some of the more celebrated pictures.

In the evening some 200 members and their wives attended the banquet at Terrace Garden. Mr. E. B. Core acted as toastmaster in his usual genial and happy vein. The toast "To the Ladies," was responded to by Howard D. Beach; "Our Society," by Pirie MacDonald; "The Photographers' Association of America," by President G W. Harris; "The New England Society," by President J. H. Garo; "The Pennsylvania Society," by President W. H. Rau; "The Press," by T. Dixon Tennant; "Our German Brethren." by B. J. Falk.

President Bliss urged the formation of more Sections and an increased membership. Ex-President Bradley spoke on the Sections. Mr. Hollinger raised two big laughs by his remarks on color value. Frank Scott Clark told a good story in Scotch dialect. Geo. G. Rockwood related some interesting reminiscences. Mrs. Kasebier told a good story. Miss Mary Carnell told of the work of the Women's Federation. Miss F. B. Johnstone suggested that the members be labeled with their names and addresses, for identification purposes; and Mr. Buxbaum spoke for the New York Photographers' Club. During the evening Pirie MacDonald, on behalf of the Society, presented the retiring Secretary, H. D Beach, with a silver cake basket, and the retiring Treasurer, Al. Lloyd, a silver salver, in recognition of their well appreciated services.

# EXTRA PROFIT

BY L. G. COOVER

I WISH, Mr. Photographer, that I could make this just a personal letter and call you by name, swing along, enthuse over my topic, and jab my pen into you in a good-fellow sort of spirit. Then I am certain I could do you some good. Well, all that's left for me to do is to work the fraternity and craft brotherhood for all it's worth to impress my argument.

You and I want to make more money, don't we? Well, I know of but one way to do it—"Get busy"—earn it. That's why I'm pushing this stub pen of mine along—selling a little good advice to this magazine which, I presume, you have already paid for—so you're entitled to all I have to offer. You want to make more money, too. Well, that is up to you. I will point the way—a tried and proved way—but you'll have to pedal yourself along, for this is no road over which runs a free bus. You must walk and you must bend your back to gather the shekels. Perhaps you need to make more, but you'll never do it or be able to do it unless you really want to make more. If you have that determination you can and you will, for I'm going to propose how you can—a way, as I said, which is tried and proved.

*Make enlargements;* don't wait for customers to ask for them, as you have been doing, but get busy and ask them to have them made. How many have you made in the last year? Perhaps twenty-five at the outside. Well, you should have made enlargements for two-thirds of your sitters. Now, don't stop reading here, thinking this is some preposterous dream—it isn't; it is an exposition of a practical studio system whereby two-thirds of your sitters can be sold an enlargement where none were sold before. I will merely point out your greatest oversight in your past conduct of business.

As a basis of calculation, we will presume you do an average business of 750 sittings yearly—two-thirds of that would be 500—so now we have the number of sitters who would buy enlargements. You could sell at least one 8 x 10. On that your profit would be no less than fifty cents; on your 11 x 14's and 14 x 17's, which are the three sizes I am pleading for, you would turn an average of a dollar.

Based on experience and thorough inquiry, it is safe to say, considering the number of patrons who will order more than one 8 x 10, and the number of larger sizes, your profit per customer will run some little better than seventy-five cents. In working with conservative figures, too, so that at the end of the year you will have in the neighborhood of $400 clear profit—velvet, as it were—and certainly you could use those few hundreds. Well, get busy and get it, and more than four hundred—all depending on your volume of business and your plus energy.

It won't cost you but very little to prepare for the work—there are dozens of inexpensive yet withal practical ways of equipment, so I will not in this article discuss the working end of it. My argument is simply for the selling possibilities of enlargements and the extra profit in sequence.

Prepare some samples, and I suggest doing it in portfolio form. On one page mount a contact cabinet print, on the opposite page an 8 x 10 enlargement, a few 10 x 12 to 11 x 14, or a panel 7 x 11 —some black, some sepia. Have a

little variety of papers, textures, etc. Use some buff papers—artist-proof a few—wax them when desirable. Frame a few.

Now, right here is a good place to dispel a certain notion or prejudice you may hold for enlargements—bromides. You are probably right now confounding the average bromide—generally a crude, coarse, dirty, smudgy, obviously enlarged bromidery bromide—with the possibilities and beauties of a well executed enlargement, and so I want to bear on this phase of the question for a paragraph or two.

I'm free to admit that nine out of ten bromides are a visual crime against photographic standards, and I'll tell you why. They are enlarged too much, way too much, and generally by a more or less incompetent worker so far as portraiture is concerned. If kept within a certain limit of enlargement, and quality for quality, there should be a gain, an enhancement of effort. I make this as an unqualified statement. I know of no one who is delivering a more perfect print in point of either technical or astistic excellence, than Frances B. Johnston, of New York and Washington, and her chief selling argument is a comparison of a contact print and a properly enlarged print, and invariably the customer selects the enlarged process print, for it has atmosphere. I could go on and name a dozen Fifth Avenue photographers who are enlarging from choice.

If you will hold your 5 x 7 negatives within certain limits of enlargement you need harbor no fear of the quality of your work; to the contrary, you may anticipate many a little surprise over added quality and little touches of charm to many of your pet negatives when they are run up in size.

If you can make a good Velox, Artura, or Cyco print, if your standard of results is for the best possible, you can make as good a print by the throwing up route as any of the really good, though unfortunately few, bromide enlargers.

The cost of production so far as material is concerned is practically the same at Velox, Artura, or Cyco; in fact, some magnificent results can be had by using the papers mentioned, though they are rather too slow to advise for everyday use. Chemical manipulation is virtually the same in bromide work as in the developing papers for contact work. True, you cannot work quite as fast, yet you can turn out a number sufficient to make a big day's profit on your labor and skill.

Your loss is slight if you use judgment; but, by all means, when you see a chance to noticeably improve a print by making it over, do so. The better your prints are today, the better will be your patronage tomorrow.

I don't know why enlarging is such a bugaboo. Certainly nothing could be more simple for anyone with a photographic knowledge to understand.

No one that I know of ever tried it and failed—that is, if he had the ability to do other things well. If you have ability, you can do bromides; if you know results, quality results, you can obtain them on the enlarging screen just as readily as by printing in contact.

Again, I want to repeat the admonition: Don't enlarge too much; don't starve quality for size—it isn't necessary. A 5 x 7 will enlarge in all cases to 11 x 14 and be the better for it. Most good negatives will go to 14 x 17 if judgment is used as to paper texture; on rough papers, 16 x 20 will retain all the quality of negative. Up to those sizes, you're safe. Beyond those you will encounter a fast falling-off in quality. I dwell upon this point in working because it is essential to my suggestion. When I suggest enlargements for profit, I have in mind the best. I said I

wouldn't write of the working part, but as I get into it I find I can't pass over that mistake in the working end without warning you of it.

Now that I've tried to prove to you that you yourself can produce good enlargements, I want to strongly advise you against the other prerogatives. Do not send your negatives outside for enlarging; if you do, you will waste your profit and lose your calm of temper before the year dies. This plan is practically useless unless you carry it out yourself.

Now to go back to the selling end of it. Make ready your samples, and work with the idea that this enlargement departure is just as much a part of your sales end as are your efforts to talk the patron into ordering a dozen prints rather than a half dozen.

Show these samples to every sitter—talk them—suggest enlargements. I don't care what sitter you select, there is a premise to conclude they will want and buy an enlargement—one or more. These are the babies. You will find it the easiest thing in the world to dispose of a couple of 8 x 10's. Suggest a couple to be given the grandparents. And children are easy, too. Figure out a scheme to give a little better, and an 8 x 10 for $5.00 instead of $4.00, regular price.

The young lady has her beau. Suggest a 10 x 12 or 11 x 14 for him. The young man has a sweetheart. Why not a larger one for her? The husband and wife have one another and their aged parents—a chance for two large prints—and the old folks have their grown-up children. Every sitter is a prospect; each one has some relative, some one dear to them, to whom they will, no doubt, be glad, even anxious, to give a better portrait if they can do so at a reasonable expense.

Put in a line of stock frames to fit the standard sizes; arrange with a local framer to furnish you molding samples, and sell on per cent. You may know of some very clever colorist, rather artist, with whom you could arrange to color many of your enlargements.

Bridal couples are always certain. Enlargements on speculation will sell at least 50 per cent.—the ones left are always good samples. Larger prints in your display case are seen from a greater distance, and more than one person will be attracted from across the street.

It will cut down your plate bill so far as speculative sittings and showcase samples are concerned.

When you don't get a direct order, watch the speculative end thoroughly. Tell the sitter how satisfied you are that a certain negative will enlarge handsomely; that you are going to make it up on speculation. Give them something for their curiosity and desire to grow upon. Don't miss a customer, and always have your speculation print ready by the time the order is.

I want to give a little example in regulation dollars and cents of the enlargement advantage.

First, presume you are not prepared to do enlargements. You are talking prices to, say, a bride and groom; they inquire about prices—for instance, two dozen cabinets. You answer, $10.00. They point to some 8 x 10's—$15.00 a dozen. We'll say a half a dozen would be how much? Ten dollars you answer. "And a large one"—pointing to a 11 x 14. You ask at least $6.00 for one—duplicates, $3.00 each. They quickly figure it all up—$26.00 total. Too much, they conclude, so they only sit for the cabinets. And yet you gave them the most reasonable price you could. When they ordered from their proofs, you probably secured about a $12.00 order.

On the other hand, had you been prepared to enlarge, you could have consistently priced the 8 x 10's at from a

$1.00 each for the same thing you asked $10.00 for six up to $1.50 each for something unusually well mounted, for the 11 x 14 from $2.00 to $3.00 would be a very good price, and at these prices you can generally secure such an order from bridal groups. You are catching extra business and giving the customers what they want for what they can afford to pay.

Where is the business logic in *trying* to get a $25.00 order if it wouldn't turn you any more profit, perhaps not as much, as an $18.00 or $20.00 easily secured, just because of the $5.00 to $7.00 difference to the customer?

In a plain spirit of fairness you owe your patrons something, in fact any business endures longest that owes its patron the most.

You haven't so many sittings per week but what a day's time would clear up an enlargement or two from every negative made during the week. If you do it yourself, so much the better. There is no process so fascinating as enlarging. If you are a heart and soul photographer you'll forget to eat. No process has the same latitude of manipulation. You can go into your bromide department with your pet negatives and do just those things you want done to them. You'll revel in it, and you'll be making money, too. Not a bad way to spend a day, is it? Or, if you have the right sort of printer, it will be a happier day for him than pay-day. Don't grow afraid you can't hold up quality to your work. Do as I suggest and you'll improve the general quality of your output. You'll commence to appreciate photography; little subtle qualities will unfold themselves day after day, and a year later you'll notice the most marked improvement in your work that any year has ever before shown. And—mark this well—it means more profit—hundreds more.

People like and want larger pictures, not necessarily 20 x 24's—that's an insane custom—they want them and will buy them if you will put them within their reach. But you know as well as I do that your average patron cannot afford any $5.00 to $15.00 for a large print. Very few people would own their own homes if they had to buy two-acre tracts.

There is no magic about the bromide process; it does not require a genius of talent or ability to manipulate it. If you count yourself a good photographer, you can do as well enlarging. That's the working end of it.

Now to the business end—it means quite a little more profit to you. It can be done. Do you want it? Studios conducted along good business lines are doing it. I haven't proposed anything but what any well equipped studio has, and should have, and, having it, they should use it.

You think me impertinent about it. Well, I know most of you photographers. If I thought another strain of writing would wake you up, I'd employ it for your own good. We're a rather indolent, procrastinating bunch—a good many of us think we're artists, when we ought to get busy and be business men first, and let our art side develop along with our prosperity. And, by the way, here's a little thought for you to think over.

You're probably not the only photographer in your town—probably not the only reader of WILSON'S. He may read this article and follow it up. See, I'm just playing one against the other. Don't let him get the bulge on you; don't let it be possible for people to come in and inquire whether you make enlargements like the other fellow does. It is going to hurt the man who doesn't, and it will help you both if you do.

And so, right now, let this resolution take root in your mind: *Resolved,* That I will attend to having an enlarging equipment installed; that I'll have this

extra profit I've so long neglected. You no doubt have dozens of articles on the *modus operandi* of enlarging. Dig into your magazines and get them out and read up. Then put in your equipment, use your head when you work, and you'll soon be making extra dollars.

Take this issue and nail it up on the wall with a big placard alongside marked *Important!*

And repeat this forty times with your eyes crossed: "Beware of Enlarging too much!"

## DOLLARS THE PHOTOGRAPHER PASSES BY

BY J. H. BURKHOLDER
Mansfield, Ohio

[THERE are more ways of killing a cat than by hanging it, and there are many ways of making money outside the studio. In the following article Mr. Burkholder gives a practical method that is not only a moneymaker but also a first-class advertisement for your studio. No town is too small and very few are too large for the scheme. It is well worth a trial. The advertising will certainly benefit you and doubtless you could use the money.—ED. W P. M.]

There is a branch of photography that is so completely neglected by the photographer that it might almost be considered to be belonging to another business; nevertheless, I shall place it under the head of "Photography." While this particular branch might also be classified under the head of "Advertising," I shall speak of it as "Photographic Advertising for Everybody." I have recently made up a few lantern slides containing the advertisements of local business firms in our city and secured the permit to use a muslin screen on the opposite side of the street from our studio upon which these "ads" were projected. Slides were also used which directly solicited other firms to take the matter up with us, with results that certainly proved remunerative to an unexpected degree. Inasmuch as this is a class of work that can be made a tradepuller for the studio, as well as a financial success for the studio taking up this neglected branch, it is to be wondered why there are not more photographers reaping the extra dollars therefrom rather than sit around trying to think up "cuss words" to suit the occasions of "dull times," etc.

The cost of an equipment of this kind can be covered with about fifty dollars, and I will say that the man who cannot get out and "dig up" enough business from the firms around him to pay for same the first few weeks could surely not be considered a loquacious exploiter

The scheme, while it is not new, is a sadly neglected one and should be followed up systematically and honestly. Give your patrons all you promise. If you agree to run the "ads" on certain nights, see that the promises are fulfilled to the letter. If you agree to make an extra slide, thus giving a change of "ad" in three or four weeks, see that "the deed is done," and the business will increase and surprise you agreeably. Don't meet the proposition half way and think that if it "pans out well" that you will then go at it right. If you do you will surely be disappointed. Don't smoke a piece of glass and scratch the letters on same with the idea that that will be good enough. It won't be

good enough to win, and rather than go at it half-minded, better leave it untried and avoid disappointment. Any photographer can make a good lantern slide if directions are carefully followed, and it is as necessary to make good slides as it is to make good negatives for your best photographic work if success is anticipated. If you are not an adept at designing or lettering, it is best to employ someone who is, as the results will doubly justify in the end and the comments you receive from the observing public will be most gratifying. financially and otherwise.

In our use we have a screen of bleached muslin, 12 x 14 feet, and this is so arranged that it can be rolled up from below much the same as an awning is raised It is made to roll on a 3-inch wooden roller which projects about 6 inches past the edge of the muslin screen on which the ropes wind when rolling up. To give the proper size image on this screen at about seventy feet distance will require a lens of about 18 inches focus, and any photographic lens of this focus will answer admirably, and as many studios employ lenses of this capacity, it will be seen that the lens can be made to answer a double purpose. The speed of the lens does not make any particular difference, as the illumination of a lens working at *f*/8 will give as much illumination on the screen as one working at *f*/6 or even faster. As to the illuminant to be employed, it must be understood that nothing short of an electric arc will give satisfactory results, and where direct current is not available, the alternating current will answer very well.

## THE COMMERCIAL SIDE

BY LAWRENCE HEYD SMITH

[THE following is one of a series of very practical and helpful articles that have been appearing in our up-to-date California contemporary, *Camera Craft*, and every photographer who does not confine his energies exclusively to portraits will be well repaid for a careful reading.—ED. W P. M.].

The term, commercial photography, like charity, covers a multitude of sins. I know of no other two words that, in their full meaning, embrace so many lines of endeavor. Strictly speaking, I take the term to mean that division of professional photography which deals only with the manufactured articles, the results being used mainly for catalogues and cuts. In reality, every photographer, except the amateur, is a commercial photographer.

Most of the work of the commercial man is intended for advertising and reproduction purposes. The photographs furnished for this purpose are, in reality, silent salesmen; and, as such, should present the subject, not only with exact truthfulness, but in the most attractive and pleasing form possible. There are a thousand things to be remembered, and done, each time an exposure is made; things which, though small, in themselves, will do much to make or mar the final result. Then, too, every firm has its own ideas as to what qualities go to make up an acceptable photograph, and their wishes must be followed or the other photographer will get the chance he has been waiting for—a chance to show how much better his work is than yours. This is one of the hardships to which you must accustom yourself.

However, my advice is, let the other man have the work if the firm demands photographs that are not technically good; for no one wishes to let a photograph leave his studio that will not reflect credit on its maker. In this general outline there is just one more thing, and that is—don't cut prices. Make your prices reasonable when you start in business, and stick to them, always being sure that the work you turn out is worth the amount you charge; or better still, worth a little more. This may make the beginnings a trifle slow, but you will find that it pays in the long run.

One of the most interesting, though I cannot say it is the most pleasant, phases of commercial work is the photographing of show windows. Unless properly handled. successes will be few and far between, and failures many. There is only one form of illumination with which I have found it possible to secure pictures of these windows without bad reflections. That is electricity. During the hours of daylight, a window picture without reflections is practically an impossibility; and, with them, the picture itself is worthless. The best results may be obtained when the windows are lighted with concealed incandescent lights. I never start an exposure until all the lights on the opposite side of the street are out, and although this makes it necessary to do the work after eleven o'clock, the improved results and higher prices more than repay me for the disagreeable features and loss of sleep. In a majority of cases it is advisable to have the glass of the window as nearly parallel to the plate as possible. If this is the case, and all of the illumination is inside the glass, the finished print will appear as if there was nothing between the lens and the objects in the window. The amount of exposure should never trouble one after the first attempt. In all such work as this I keep a careful record of plate used, time of exposure, and stop. In that way, when next I have to photograph a particular window, by referring to my record, all guesswork is eliminated, and I know just what is necessary to secure a fine picture. Of course, I always use nonhalation plates for this work, and develop in a rather dilute solution. This is hardly necessary, though, with a window that is properly lighted; so little thought need be given this part of the work. The dilute developing solution is used more to help the detail than to prevent halation. With a plate the speed of Seed's 26X, I find that ten to twelve minutes with stop sixteen, will show good detail, even in the backgrounds, which are usually a dark green. Owing to such pictures having to be taken late at night, the work is worth more than the usual run of daylight exposures; and I always charge double for such night negatives, furnishing the prints at my regular price.

Photographing manufactured products is another class of work that will give the beginner trouble until a few essentials are mastered. Taking cast-iron articles as an example let us consider grate fronts and baskets. These will invariably be painted a dead black, and yet full detail must be obtained in order to show every little relief in the ornamental work. Needless to say, full exposure must be given. Still more important are the direction and quantity of illumination that the object receives. Plenty of good, strong light, not, however, that of the direct sun, should illuminate the object from such an angle that every detail of the raised work shows up prominently, and casts a shadow just a little blacker than the color of the iron itself An angle of about forty-five degrees is correct. Another thing that must be looked after very carefully in this work is levelling—not only the camera, but the object itself. See that the centre comes along

a line which should be drawn down the middle of the ground glass. If it is impossible to secure this result with ordinary means, have recourse to the swing-back of the camera. Unless care is taken to have the object parallel with the plate, one end will be larger than the other, and a new negative will have to be made. A strong developer should be used to add to the very little contrast which such objects naturally show. The background in these negatives will have to be blocked out; and a ruling-pen such as draftsmen use, together with a transparent triangle for ruling the straight lines, will come in very handy. In fact, when a grate basket is the subject, it is very hard to get every line true in that part which is open unless these helps are used. As an aid to blocking out, place a white or nearly white sheet under and back of the object to be photographed. This will, in the negative, show exactly where the parts are that must be blocked out, as well as those which must be left alone. To my mind, all such work should be printed on glossy paper and ferrotyped, whether for reproduction or not. This finish gives a depth and brilliance to the finished work that can be secured in no other way.

While for this particular class of subjects I advise a direct front view, you must not understand me to mean that all such work requires this view-point. In fact, almost everything, except flat objects, requires an angle of from forty-five to sixty degrees, to be presented in the most acceptable manner. Tables, chairs, trunks, and the like, would present a most unpleasant perspective, or lack of perspective, if photographed directly from the front. And this brings me to another important matter involving perspective. The use of lenses of short focus, or what are called wide-angle lenses, is to be discouraged in every case where a lens of normal or longer focus can be used. The shorter the focal length of the lens, the greater will be the difference between the parts of the object nearer the camera and those in the rear. The longer the focal length of the lens used, the more satisfying the perspective appears. This is especially true when photographing objects that contain prominent lines in different planes; furniture, for instance. The manufacturers of wagons and automobiles insist, and with good reason, that the four wheels appear as near the same size as possible, and will not accept photographs in which the difference in size is often so great as to seem ludicrous. The better result is secured by using a lens of greater focal length, and working at a greater distance from the object. If one does not happen to own a lens of suitable focal length for this class of work, he may resort to the back combination of his normal lens, using a smaller stop. The improvement in the drawing will be very noticeable.

One of the most interesting branches of commercial work is the making of series of photographs showing the different processes in the manufacture of a certain product. One such, that I have just completed shows the manufacture of hosiery, from the raw cotton, as it is shipped into the mills, through all the processes of cleaning, spinning, weaving, dyeing, packing, and the like; the last photograph showing the huge cases of the finished goods being loaded into the cars before the factory. While interesting this branch of photography can present more difficulties to the square inch than any other which I know. Light, and the lack of light, will, in turn, confront the photographer. In all work of this kind, leave your camera at the studio the first trip you make. Look the ground over carefully with one of the officers of the concern, and have him explain just what is wanted and where each picture will have to be taken. Then go over it again, explaining to

him in detail what will have to be done to prepare for your coming. Point out what windows it will be necessary to block up and those that must be left open. Show how the goods and employees must be placed and arranged to secure the best results. During the visit, decide just what you must bring with you to do the work. Be sure that you bring everything that is needed, and be just as sure that you leave behind everything that is not. Wherever practical, make time exposures, leaving the flashes till the last. Even when there are people in the picture, you will find that you can often avoid the use of the flash machine. Watch the people closely and give as much exposure as possible. In time, someone will be sure to laugh; but you can see it coming and close the shutter in time to save the plate and get the maximum exposure. My reason for not using the flash more than I do in this work is that in each room there are generally several pictures to be made, and if you fill it up with smoke, it will be necessary to either wait until it becomes clear or go to another room to make the next exposure. Both plans are unsatisfactory One of the most difficult features of this work is making the employees understand that the picture-taking is as much business as their daily work. Before an exposure I always explain to them what I want. I find the best plan is to be as pleasant as one's patience will allow, without becoming familiar. This last you will find to be as fatal to success as being cross and overbearing. And finally, good results will depend, more or less, on the printing, quite as much as in making the negatives. With the light uncontrolled, or nearly so, in spite of all you can do, some parts of almost all of your negatives will be much stronger than they should be, and others much weaker. After these have been worked on to the extent of your ability, you will find that much dodging will still be needed in the printing. Almost all such work that I do is printed on printing-out paper, as that seems to lend itself much more readily to shading than its cousins, the gas-light papers. This is the only occasion on which I use the printing-out paper, except for proofs.

While I do not find it necessary to resort to any great amount of dodging, there are few negatives but what can be improved by a little work. A highlight may be too dense, or a shadow too dark. Ground-glass substitute, tissue paper of the onion skin variety, blue water-color paint, vaseline, and a little dry yellow color are the needful articles for this work. If I have a negative in which the contrasts are too pronounced, I flow the glass side of the negative with ground-glass substitute; and then, with a knife, or with a tuft of cotton dipped in alcohol, I remove it from the highlights, allowing them to print deeper in proportion to the shadows than before. If some of the highlights are still a little too dense, a little vaseline, rubbed on the tissue paper which should cover the frame in all such printing, will allow more light to reach the part that requires it. If the shadows still print too dark, a little dry yellow rubbed on the tissue will hold them back still more. If only a spot or two need holding back, it is not necessary to use the ground glass substitute; a little yellow, applied directly to the tissue over these spots will achieve the desired result. Dense spots may be printed through a hole cut in a piece of cardboard, a piece large enough to protect the balance of the negative from the light. I should imagine that this work on the back of the negative could be done much better and more easily with an air brush.

The commercial photographer has one particular difficulty to avoid or overcome, that troubles the portraitist but little, and that is halation. It is claimed

by some that this defect is present in all negatives made on ordinary plates, being more or less apparent in direct proportion to the contrasts of the picture. As we already know, the light penetrates through the film of the plate, strikes the glass support, and is reflected back into the emulsion; thus making what is in reality a double exposure of such parts. More halation will exist if the glass of the plate used is thick than if it is thin. This, on account of the increased angle of refraction, due to the thickness of the glass. Numerous methods have been advanced, by plate-makers and others, to overcome this difficulty. Almost every manufacturer now has a so-called non-halation plate on the market. In most cases it is double-coated; the coating next the glass being a slow emulsion, while that on the top is of the rapid variety The contention is that the exposure can be completed before the strongest rays of light have time to penetrate the slow emulsion and be reflected back. These methods of preventing halation seem perfect in theory, but for myself, I have never been able to fully secure the results with non-halation plates that their makers claim One great advantage that I find in their use lies in their latitude. The slow coating will take care of any reasonable overexposure, while the fast upper emulsion will give satisfactory results with very short exposures. It is claimed by some that the ordinary non-halation plate is not as fast as the regular plate of the same listed speed, for the reason that the light reflected by the glass support is lost. Whether this is so or not, I would not attempt to say.

Almost as many methods of overcoming halation have been advanced as there are means of preventing it. Among them may be mentioned local reduction; reduction with persulphate of ammonia, which reduces the highlights before attacking the shadows; and also a method discussed some time ago, called rehalogenization. This last is defined as "a process for restoring a completed negative to nearly its original condition—before development," after which it is re-developed, stopping before the halated portions have had time to regain their former full density. As the silver which has received the action of this reflected light is deep in the emulsion, and next to the glass support, it seems foolish to attempt to remove it by means of reducers acting only on the surface of the film. Therefore, the latter remedy seems most rational.

All this work, though, is pure waste of time if ordinary care and thought be used while making the exposure, and during development. In reply to this, you may say, halation is bound to appear under certain conditions over which we have no control. My contention is that we *can* control these conditions, if we will. The method I employ, which by the way, I do not claim as original, is, in a way, akin to rehalogenization; but I get rid of the halation in the first development, and in that way avoid redeveloping, re-fixing, re-washing, and re-drying—all these being necessary if the former method is used. When I have a picture to make, in which halation is likely to appear, I make it a point to overexpose the plate. In developing, I use a concentrated developer; and, as soon as the first highlight appears on the back stop development. Fixing and washing follow as usual. A good strong negative, with plenty of detail, will result; but there will be absolutely no traces of halation The use of non-halation plates is not essential to good results when using this method I can secure better negatives on regular plate, using this method, than I can on non-halation plates used in the ordinary way. However, I use the double-coated plates almost entirely, on account of their latitude, an advantage which

was mentioned in a preceding paragraph.

A few words as to the whys and wherefores of this process may not be amiss, so I will give what I think are the causes of the combined action of exposure and development, as outlined above It is a well-known fact that the more concentrated a developer is, the harder it will work; or, in other words the more contrast it will give. This is proved, in a way, by the opposite fact that a weak solution is always recommended for underexposures and for those negatives in which undue contrast is apt to appear. Now, my theory is, that a certain amount of overexposure, treated in a developer concentrated to a relative degree, will produce a certain amount of contrast. This degree of overexposure and the necessary concentration of the developer to produce the results desired, will have to be found out individually, but one's first exposure along this line should furnish the needed information. My regular developer, metol-hydrokinone, is composed of two parts stock solution and one part water; but for this special development I give from one-half to three-fourths more time, and use the stock solution without any water added. This gives me just the results I wish.

The overexposure is to give full detail in the shadows When the exposed plate is placed in the developer, the action starts almost immediately over its entire surface, all details becoming apparent at about the same time The strong developer acts very quickly, and density in the highlights is gained very fast. When the first highlights show through on the back, both the highlights and the shadows will be sufficiently dense, and development must be stopped at once. If it proceeds longer, halation is very likely to show. The plate is, in reality, underdeveloped, but the overexposure has taken care of the shadows, and the concentrated developer has given plenty of contrast, but it has worked so fast that the halated portions have not had time to build up enough to show in the finished result. There is no lack of printing quality in a negative developed in this way, in spite of the fact that it is underdeveloped. The point of kinship between this method and that in which rehalogenization plays so prominent a part is that, in both cases, development is stopped before the halated portions appear. That is the main point in both methods the other requirements being subordinate!

---

Always rinse the plate between development and fixing.

Always rock the developing dish if pyro is the developer.

Oxidized developer acts strongly as a retarder of development.

All sulphites owe their preserving properties to the sulphurous acid they contain.

The "personal equation" is an important factor in successful negative development.

If a one-solution developer is being made, the alkaline portion must be added last of all.

In warm weather a developer containing metol is liable to fog plates unless kept below 65° F.

Hydroquinone alone gives "pretty" negatives, rather than negatives of good printing quality.

To stop development without fixing, place the plate direct into citric acid, 5 grains; water, 1 ounces.

The developing power of hydroquinone falls off more rapidly in cold weather than any other developer.

In making up metol solutions, the metol must first be dissolved in water and the sulphite added afterward.

For stand development use glycin, ¼ ounce; sulphite of soda, 1 ounce; carbonate of potash, 1 ounce; water, 80 ounces.

By Charles L. Peck. Buffalo, N. Y

By Charles L Peck, Buffalo, N. Y

By Charles L. Peck, Buffalo, N. Y.

By Charles L. Peck, Buffalo, N. Y

By Charles L. Peck, Buffalo, N. Y

1 Spinola
By RUBENS

2 Portrait of a Girl
By REMBRANDT

3 The Vidette
By J. L. E. MEISSONIER

4 Alice
By W. M. CHASE

*Illustrating Sadakichi Hartmann's Article*

5 Wrangling over Cards
By David Coe

6 Les Amateurs
By Alexander Harrison

*Illustrating Sadakichi Hartmann's Article*

7 Flower Girl in Holland
By G. Hitchcock

8 Close of Day
By Charles H. Davis

9 Twilight
By Charles H. Davis

*Illustrating Sadakichi Hartmann's Article*

# A VISIT TO THE CHICAGO ART INSTITUTE

BY SADAKICHI HARTMANN

It was Kielland, a Norwegian writer, who said that all persons interested in paintings could acquire a picture gallery of their own, a possession which has nothing to do with the state of their future, and which no foreclosure proceeding could take away from them. For it has nothing to do with the income and actual ownership, but is solely a property of their memory and appreciative faculties.

Good paintings are a decided luxury, comparatively few can indulge in the privilege of making a collection. Reproductions, the picture stores, current exhibitions, and the art museums constitute the sole vehicles in which a student and lover of art may get acquainted with good paintings. Every visitor to a museum necessarily has his own predilections; he prefers some pictures to the rest, and in that way makes a selection which lingers favorably and permanently in his memory, and which is absolutely his own mental property—a picture gallery that reflects his own personality.

In our walks through the most prominent art museums of our country, those of New York, Boston, Philadelphia, Pittsburg, St. Louis, and Chicago, we will try to gather together and discuss those paintings that would appeal to the photographic craftsman. There is no use of reproducing elaborate pictorial compositions that are beyond the reach of camera expression. They would only confuse the mind of the beginner, and call forth a smile on the lips of the advanced pictorialist, as he has realized the difficulties of his medium.

The Chicago Art Institute has quite a choice collection of Old Masters, and is particularly strong in modern French and contemporary American paintings.

The portrait of Spinola, a Spanish general (Fig. 1), by Rubens, is one of the finest portraits of the Old Masters in this country. It is a face that we can not easily forget. But it is not only the selection of the model, the peculiar construction of the head, and the lifelike facial expression that fascinate us, but rather the precision of outline and the forceful modeling in full top light. It was a bold experiment to divide the entire area of the picture into two decided planes, an elliptical white shape surrounded by a black background. But there is perfect balance, because of the shape of the face, the Elizabethan ruff, so cleverly placed, and the high lights on the cuirass, so masterly put in that there is perfect balance. You will notice also that the bust is strictly triangular, which is always a favorable shape for a three-quarter view.

Particularly interesting is also Rembrandt's "Portrait of a Girl" (Fig. 2). Here we have one of his curious light effects that produce deep shadows and a variety of half-tones. It is less direct than the Rubens, but more picturesque. The shape of the figure, with the arms resembling the handles of a water jug, is awkward in itself, and we wonder that the painter silhouetted it so sharply against the light; but it is perhaps this very simplicity which produces the pictorial effect. The principal charm of the picture, I believe, can be traced back to the lighting. The side lights on the face and hand lend animation to the entire composition. Cover up the hand and you will realize how strong a factor it is in the making of this picture.

"The Vidette," by Meissonnier (Fig. 3), solves the rather difficult problem of placing a figure successfully in the centre of the picture. This is largely due to the long, narrow shape of the horseman and the division of the surrounding scene into two simple tonalities. The sky is almost a flat tint, while the foreground and middle distance show any amount of dark accents that correspond with the dark passages in the horse and figure. It is really the shrubbery on both sides which holds the point of interest in place. I do not see any other way to solve this problem without making the rider look "out of balance."

"Wrangling Over Cards," by David Coe (Fig. 5), a Belgian *genre* painter of the earlier part of the last century, is one of those telling pictures that are tabooed by the younger painters, but that are still liked by the general public. It is particularly fine in facial expression, but overcrowded with unnecessary detail. Story-telling of this sort may go too far; it is like the illustration of a chapter of some popular novel, a little of it goes a long way; but the other extreme is just as unsatisfactory. A painting should hold the interest of the beholder by something else than mere technicalities. The Old Masters were not afraid of losing their art by meeting the public halfway. Besides, there are so many ways to accomplish it. It does not necessitate the exploitation of some literary idea, but can be brought about by much subtler qualities, that appeal directly to our emotions.

We now come to some of the American pictures. "Alice," by W. M. Chase (Fig. 4), is an excellent figure study. It is meant for a portrait, and yet nobody thinks of portraiture in looking at it. The swing of the body, the position of the feet, the smile on the youthful face, the hands toying with the ribbons, make this picture interesting to everybody, and this appreciation is totally different from that which is derived from the manner in which it is painted.

The same may be said of Figs. 6 and 7—"Les Amateurs," by Alexander Harrison, and the "Flowergirl in Holland," by George Hitchcock. There is no story-telling about them; they are depicting merely a pretty incident. Too pretty, no doubt, for some people, but I am certain that if you would take the trouble of asking people, nine out of ten would like these two pictures.

As far as composition is concerned, Fig. 7 is by far the better one. It is an extreme oblong, an unfavorable size, as its excessive width easily divides the interest, making two pictures out of what should be one. In this instance a clever linear perspective arrangement of diagonal and vertical vanishing lines manages to fill the space. About one-fourth of the picture could be trimmed off at the left without spoiling the composition of the rest, and yet this part is necessary to carry out the out-of-door feeling. The figure is again in the centre.

Fig. 6 is rather poor as a space arrangement. The boat is placed a trifle too high, and is too large and decided a shape to remain without any complementary form. The omission of the sky helps the sentiment of the picture, by producing that feeling of isolation and loneliness which is peculiar to a lily pond.

In the "Close of Day" and "Twilight" we have two simple and effective landscapes of Chas. H. Davis' later style. In his early career he tried to convey sentiment by landscapes, and succeeded perhaps as well as anybody, not even excepting Cazier. Now his ideals are the suggestion of space, atmosphere, and the solidity of the soil. Hardly anything more simple in composition than Fig. 8 can be imagined, and yet the lonely shanty fascinates us. The picture exhales a genuine breath of Nature. Technically, this is due to the

smallness of the structure, the high horizon line, and the broad, massive treatment of the ground. Also, Fig. 9 yields a fine impression of solitude and space. The lonesome road, the evening sky, the silhouette of the two trees without much detail, and the returning flock of sheep are the main factors in this composition.

I believe the paintings we have examined today have taught us two valuable pictorial truths: First, that the division of a picture into two tonal planes (viz., Figs. 1, 3, 4, 8, and 9) is invariably effective; and that the breaking-up of a plane into lighter and darker accents (without spoiling the dominating tonality) will always add vitality and picturesqueness to the entire composition (viz., Figs. 1, 2, 5, 8, and 9).

## COLOR PORTRAITURE BY COLLOTYPE

THE interesting feature of the advent of Autochromes, to my mind, writes S. G. Yerbury, in Penrose's *Pictorial Annual*, has been the strong desire, everywhere expressed, to see the same class of image on paper. A considerable increase in color collotype has taken place recently, which is probably a sort of response to this desire. These collotypes are usually copies of paintings of fairly large size, which require only one negative for each color plate. The cost of one small portrait by this means would be prohibitive, but it is quite possible to combine a number of glass negatives to print on one collotype plate and to register the remaining sets of negatives for succeeding plates.

Before explaining how this may be done, a few words on color portrait negatives may not be out of place. The camera, stand, and sliding back must be so rigid as practically to form a solid whole, otherwise the negatives will not register.

For really satisfactory results, a fourth plate is a necessity. There is no occasion to be dogmatic as to what plate and filter it should be so long as the result is a good orthochromatic rendering of the subject.

The present form of sliding back, which slides horizontally, is cumbersome. It requires the presence of an assistant to push it along after each exposure, which wastes time, leaves the operator at the mercy of his assistant, and is disquieting to the sitter. The back should slide vertically or at an angle, a catch releasing it after each exposure so that it falls of its own weight into position for the next exposure. This would be under the control of the operator and reduce the total actual exposure to its shortest possible limit.

Having made a sufficient number of sets of negatives (three color and one orthochromatic) to make up a sheet of, say, nine half-plates or six whole-plates, the first step is to set out the orthochromatic or tone negatives.

Arrange them on a thin sheet of card with equal margins between, mark them round, and cut the space out in the card, making the openings quite one-half inch smaller all round than the negatives. Touch the margins of the openings lightly all round with seccotine and place the negatives in position. Then turn the sheet over on a glass and stick strips of cork round the margins which press on the negatives. These strips can be obtained at a cork cutter's and should be one-eighth of an inch thick and about one-quarter of an inch wide. When the whole is thoroughly dry it is ready for exposure on the first collotype plate, which goes through the usual routine until it is printed on the machine.

Here great care is essential that all is rigid and the lay correct before running off the required number. These should be printed lightly and evenly in a soft gray and a fair number printed over for waste. Then a further run of thirty or so should be made in a decided black, for use in obtaining register in the machine, and finally two or three sheets pulled on thin celluloid. The plate should then be washed out and kept, as it will most likely be wanted again.

The second set of negatives, that is, the yellow printers, are set up next by means of one of the prints in celluloid. It is best to have a special bench made in front of a window for this class of work. Cut an opening in it, in which is laid loosely a sheet of plate glass. The window should be continued under the bench, and a reflector placed at such an angle as to reflect evenly up through the glass.

By this means it is easy to examine the whole sheet flat and place the negatives in position without fear of slipping. The celluloid sheet must be placed inked side downward on the glass bench, the negatives having been touched round with seccotine, can then be registered perfectly on it, after which a similar mask to that first cut and on which similar strips of cork have been previously fixed, should be pressed very gently and evenly on the negatives and left to dry.

When all is dry, a sheet of glass should be placed on top, and then, lifting the glass out of the bench, the whole can be turned over bodily, the bench glass and celluloid sheet lifted off and the remainder put in the exposure frame for the the next plate. On the following days the red and blue printing plates can be made, registering from the celluloid print in the same way, so that in four days the print will be complete. In whatever way the prints may lack balance or contrast, the first tone plates can be put on again and a faint printing made from it in whatever tint may be necessary to put all in balance.

The color inks behave differently from black. The yellow has a tendency to clog, so that slab and rollers require partial cleanings at times to keep the prints even. The yellow should be printed fairly strong, as it is the bottom color. A piece of blue glass similar to the color filter used will greatly help in judging them. The red has a tendency to run flat and is the most difficult color to print. The blue should be put on lightly at first, as, being the top color, it would soon predominate. This method of printing glass negatives together by means of cork strips is no new idea, neither is the registering by means of celluloid prints, but the practical combination of the two enables a number of color negatives to be printed together, and by that means the cost is immensely reduced. High-class portraiture that would commend itself in any studio could be produced by this means at a good profit, and at a price less than platinotypes or carbons.

## POSSIBILITIES IN CINEMATOGRAPHY

### Special Points for Orthochromatizing

As we were quietly seated in our library the other evening, writes Alfred H. Saunders in *The Moving Picture News*, delving down among some old papers that we had read before the British Photographic Societies in years that have gone by, for some reminiscences and points on the orthochromatic plate

and film, with our hair all crumpled and awry, and papers littered around the chair for references, our good friend, Friese-Greene, walked in with the remark, "My gracious, what are you doing with all that litter?" We replied, "Delving up orthochromatization;" to which he responded, "Let me help you, old chap, and I think if we work together we can get up a rattling good article." So, nothing loath, we availed ourselves of the opportunity to present our readers with the beginning of a series of articles that will be of practical value to the whole future of cinematography, and feel assured that the thanks of the photographic profession will be given us for presenting these articles. First of all, let us say what orthochromatization is, and its relation to color, the art of cinematography and its relative value to the perception of the eye in the colors of nature.

In seeing color, the color vibrations pass through the lens of the eye, and then to the retina, and are reflected from the back of the retina by a natural concave spherical mirror, which is called the choroid. The retina is composed of a rod and cone points, giving rise to color image-forming vibrations which pass along the fibers of the optic nerve to the brain, where, no doubt, a visual image takes place.

Now, in color photography we take through red, green, and blue screens on an orthochromatic film. At one time the sensitive gelatine film, before the action of dyes was known, was only sensitive to violet, blue, green, and a little of the yellow dyes, extended light action to the orange and red; one of the best I have found for work with cinematography in natural colors I will mention later. The light impression gives rise to three sensations which are quite distinct—a light sense, a form sense, and a color sense. The first is the faculty of distinguishing illumination and its degrees of intensity. This is effected in the most simple case by the presence of an image quite independent of color. The color sense constitutes a further development of vision, as it is known that all colors in nature can be formed of red, green, and blue-violet, and white is formed by the action of these three colors; thus, if these three primary colors be projected on to a screen by separate lanterns and then superposed, the result is a white disk of light. The brighter the lights the more brilliant the disk. The brighter the light in taking cinematography in natural colors, the better, because if one goes into a picture gallery at dusk all the red and orange colors appear nearly black. If, on the other hand, the light is bright, the reds and orange become very bright. But as regards the colors of plumage of many butterflies and birds and the bodies of beetles, as well as the beautiful tints of mother of pearl and the soap bubble, which are due to interference phenomena and not to pigments, as these colors change at different angles, one has different colors at every movement, which is a charming study in cinematography in natural colors—whereas a black and white picture has not the fascination. Just the same, what fascination have our flags in black and white compared to color?

In making the three-color filters, see that all the filters of a set are of exactly the same thickness, as any variation in this respect will throw the images out of register when they are enlarged to such an extent as the cinematograph pictures usually are—and the best test of the three filters is—if the red and green filters are superposed and a bright light is viewed through them, then a person of normal color vision should see dark yellow color. The blue and green filters superposed should produce a dark bluish green. I generally test my color filters by looking through the red filter

at a colored chart; the blues must look black, and in looking through a blue filter, the reds must look black; the green filter must make every color look green, with no trace of red and blue. In cinematograph natural-color work, you project the transparencies through the same color as the negatives were taken through—not the complementary—like in still life, where you project transparencies from a set of three negatives on to a screen by means of three lanterns—this I found out in 1898, that one must use the same filter in projecting as in taking.

Because of the extraordinary popularity of moving pictures, and the power of producing nature as we see it, black and white will gradually give way to the beauties of color, as color, it is proved, can be produced as cheaply as black and white, and when the public has seen natural-color cinematograph pictures they will always want to see them instead of black and white. Now, the only thing, as I mentioned at first, is to use an orthochromatic negative film in taking through the filters, and one very reliable color sensitive is orthochrom T. Hoechst (which can be bought from Lucius & Bruning, Hoechst-on-Main, Germany). It has a high sensitiveness for green, yellow, orange, and red, and also makes the film very sensitive. It does not fade, and gives exceedingly clear shadows, and will keep a very long time. The film can be developed with any good developer. You must sensitize and develop in the dark. For use, dissolve

A

Orthochrom T. Hoechst 17 grams in 4 ounces warm alcohol,

Then add

| | |
|---|---|
| Alcohol | 16 ounces. |
| Distilled water | 20 ounces. |

Keep this solution in brown bottles in the dark and it will keep indefinitely. For use, take

| | |
|---|---|
| Distilled water | 8 ounces. |
| Ammonia | 35 grams. |
| Solution A | 70 grams. |

The film should be sensitized in this solution for five minutes, taken out and washed for three minutes, and dried in an absolutely dark place as quickly as possible.

(To be continued)

## DIFFUSION

THERE is no subject on which the orthodox photographer is more hazy than upon that of diffusion of focus, "flou artistique," or "fuzziness," as it has been variously termed by its friends and enemies. Since 1866, when the late J. H. Dallmeyer produced the first commercial instrument for this class of picture, thousands of lenses with adjustments for modifying the character of the definition have been made, but, as a general rule, such adjustments are entirely neglected, even if the lens owner is aware of their existence, which, judging by the numerous inquiries which we have from time to time received, he frequently is not Although it is difficult to distinguish between them there are, undoubtedly, different qualities of softness in photographic definition, varying not only in degree but also in their character. The softness which is obtained by the utilization of spherical aberration differs widely from that resulting from enlarging a sharp negative upon paper placed slightly out of the plane of sharpest focus. For "soft focus" effects a much stronger style of

lighting than is ordinarily used is necessary; otherwise, the first impression created will be that of simple unsharpness or blurring rather than that of breadth of effect without harshness of outline; and further, the degree of diffusion must be in proportion to the scale on which the subject is rendered. For example, the circles of confusion, by whatever means produced, must be only half the size in a 2-inch portrait of a head that they would be in a 4-inch one, which would look equally sharp at the increased distance at which it would naturally be viewed. The methods which may be employed to produce soft pictures are varied in nature. They comprise what may be termed optical and mechanical systems, the softness being either obtained at the time of exposure or by subsequent manipulation of the negative or print.

The optical methods are undoubtedly the most important, and the most characteristic results are those resulting from the use of lenses in which both spherical and chromatic aberrations are present, such as the Puyo-Puligny, the Smith and Dallmeyer-Bergheim systems. With these it will be found that there is a sort of indefinite sharpness, if the expression may be permitted extending over several planes, an effect which is totally different from the softness produced by spherical aberration alone. That this is a fact was proved by the late T. R. Dallmeyer, who constructed a lens of the Bergheim model, but having both lenses carefully achromatized. This was placed in the hands of a photographer who was already skilful with the chromatic form of the same lens, with a request that he would test it in competition with his old lens. He did so, and the results were disappointing in the extreme, the quality of image being totally different and lacking the painter-like effect which is so desirable.

The image produced by a simple or "spectacle" lens is of the right quality, but, as a rule, such lenses are of small diameter, and consequently do not give a sufficient amount of spherical aberration for large work. With a lens of two inches in diameter and a focal length of thirty inches, we have only an aperture of *f*/15, at which point the spherical aberration is reduced to a minimum. The single lenses of many modern anastigmats which are not sold for use with large apertures are nevertheless invaluable when spherical diffusion is all that is required, the same applying also to the front lenses of most portrait combinations, which should, however, be reversed in position, so that the convex side faces the plate when the spherical aberration will be greater and the diffusion more even over the entire field.

The diffusion arrangements of portrait lenses demand special mention, as by their use varying degrees of softening, ranging from absolute sharpness to a decided blurring, can be obtained at will without appreciably altering the working aperture; a simple separation of the glasses forming the back combination of the lens introduces any desired degree of diffusion. The Dallmeyer Patent Portrait, Bausch & Lomb Portrait, and Cooke Portrait lenses all have adjustments of this nature, the latter, of course, being slightly different in design, although the general principle is the same. The more recent Voigtländer and some Swift portrait lenses are capable of adjustment in the same way, but not having been specially designed for the purpose, have to be set by taking out the back combination and slightly unscrewing the inner cell. Portrait lenses of the ordinary or Petzval type cannot be used in this way—the effect of separating the components of the back combination is very slight indeed. Many persons labor under the mistaken idea that simply unscrewing the entire back combination in the tube

has a diffusing effect; this is quite erroneous, it is only adding to the length of the tube and affects the covering power rather than the general definition.

What may be classed as mechanical effects for producing diffusion are mainly printing dodges, such as printing through one or more thicknesses of celluloid paper, or the like, or even by reversing the negative in the frame so that the back is in contact with the sensitive paper All these tricks have their uses, especially where the best has to be made of a hard, sharply defined negative; but, better than these, is to produce the print in the enlarging camera or lantern, using a lens of the nature already described. Even with an ordinary lens with a fairly flat field, a greatly improved result can be obtained by judiciously focussing the image so that it is not too sharp, but just sharp enough.

An entirely different way of producing a soft image is by the use of bolting silk, which may be used either in the ordinary way in making an enlargement or in the camera between the lens and plate to soften the definition in the negative. We have also seen a gauze screen interposed between lens and sitter for the same purpose, but without the result which was anticipated, as when the gauze was sufficiently out of focus to obliterate the mesh the effect was rather that of fogging than softening of the lines.—*British Journal of Photography.*

## THE WAY WE LOOK AT THINGS

(Concluded from page 91)

BUT it is not only gradation or contrast that are lost; there is a softness of edge resulting from the impressionistic view that is one of the worst features in modern art. Excessive hardness of edge limits the size of things and interferes with roundness, but there is so much softness about that there is a fusion in the masses which is very unpleasant. A melting edge here and there is very beautiful when warranted by nature, but in the foreground and well into the middle distance under most lightings, however delicate the differences in value may be, nature appears to the eye as a patchwork each part of which is within its own limits. To imitate this without making the patches either too separate or too distinct is the problem of the artist. In avoiding hardness we must not soften everywhere equally, it is the finding and losing of edges, the variety and contrast, that tell. In a tree, for instance, where the edge is made up of overlapping parts at different distances from the eye, turned at such angles, too, that some leaves blend with the sky, there is bound to be varying degrees of firmness, this live edge, for there is generally a tremble there, is one of the most difficult things in nature to represent. Clouds also are soft or decided in the same way, for there are different planes turned at various angles to the light besides different degrees of sharpness of modelling by wind and temperature. In the distance, too, there is a blending and mystery constituting the chief charm of landscape, but all these are to be rendered without the fuzziness so prevalent in modern work.

It is interesting to observe the fondness of Turner for a frankly conventional pen outline in his later water colors, thus enforcing the edges where required. In the oil paintings of Hapignies also there appears in parts almost an outline. I might instance some of Corot's work and that of Jacob Maris, and though it may be said this is only one method of rendering nature, and there are other

ways, I would answer that it shows at any rate the value of good crisp edges in portions of the picture. In the work of the artists I have just referred to the outline does not show as such when looked at from the right distance, but Turner's outlines are outlines, though when the eye gets used to them you feel what they are there for and their value in the picture.

The softening of today is far too general; this is merely begging the question; to take a picture that is distinct all over and make it all equally indistinct is no way out of the difficulty. You must forgive me for dwelling on what may be thought very elementary errors, but though they may be the faults of the beginner, they are seen also in the pictures of the advanced worker, I am tempted to say more especially in the controlled processes.

## PHOTOGRAPHING MACHINERY IN POSITION.

A GOOD deal of my photography during the last few years has been in connection with my own profession—engineering, writes C. E. Goodchild in *Photography and Focus,* and I have found it very useful, on more than one occasion to be able to make a record of the appearance cf a machine after erection. So much so that, if it is in any way possible, I now never leave the work without having a photograph of it in position. As I am concerned with power plants put up in factories and other buildings away from the works in which they were made the lighting conditions are of the most varied kind, and it sometimes happens that the work is so enclosed that it cannot be photographed at all. In most cases, however, some sort of picture is possible, but the demands made on one's apparatus are extreme.

The first consideration for work of this kind is the apparatus. A stand camèra is an essential, and it should have both a rising and cross front and a swinging back. A short focus lens is also a necessity. I do not care for the strained perspective given with a wide-angle lens, and my outfit for ordinary photography includes both a lens of average focus (7½ inches for a half-plate) and a telephoto. But a 4¾ inch lens which, well stopped down, will cover the half-plate and allow of the use of the rising front is almost always found to be necessitated by the circumstances of the case. Plates should be of the fastest kind, and backing is a necessity on account of the reflections from bright parts.

The "pose" of a piece of machinery may seem a strange expression, yet this is a subject which must have very careful attention if the photograph is to show it at its best. Reciprocating parts should not be shown at the end of their travel; their function and form are much easier seen, as a rule, if they are in some intermediate, but not exactly intermediate, position. Even such a detail as a row of lubricators, or of cocks or switches, looks better if they are all arranged in the same position.

As far as the surroundings of the machines are concerned, in my own case there has been little trouble. They are generally erected in a building with limewashed walls, without other mechanism intruding upon them, and when the walls have been dark in color, a bucket of whitewash has made all the difference. When this was impossible, I have got a similar result by covering the walls with newspapers. The floor can be left as it is, or, if a light floor is wanted to show the boundaries of the apparatus, it may be lightly sanded. A

banner, made by gumming together a number of newspapers and mounting them on a light framework, is sometimes very useful. It may be carried by a couple of laborers, who are instructed to keep moving it about during the exposure. It will then show no irregularities on printing, but will appear as a plain light gray background.

Although daylight is generally available, it often simplifies the work considerably if it is not used. In most cases the daylight comes from the only direction in which the camera can be placed, and this gives a flat lighting. Moreover, if the camera has to be in an open doorway or even out of doors, looking into a dark building, an exposure long enough to show the machinery will nearly always be found to give a foggy negative, presumably from light reflected from the lens mount, flare, etc. In such a case I prefer to get all ready by daylight, and then to wait until dark, when the work can be photographed by magnesium. The whole secret of photographing machinery by magnesium lies in the use of plenty of the metal and of ample diffusion. An old packing case can be employed, standing it on end, with its open side covered with tissue paper. A few yards of ribbon may be cleaned with glass paper, plaited together, and hung up in the case, with a tin with a few drops of Columbia spirit underneath the lower end. When all is ready, taking care that the light cannot shine directly on to the lens, a match is put to the spirit. While the ribbon is burning, I usually light another piece and wave it about beside the camera, so as to get some illumination on the darker shadows. Magnesium is cheap enough to allow of a liberal supply being used, and the tissue paper acts as a diffuser, the lighting obtained being practically identical with what would be got from a window, admitting daylight, in the position of the box Without a box, if the exposure is prolonged there may be trouble from illuminated smoke.

It is not often that my negatives call for blocking out. If they require it, the background makes it quite easy. I work mostly with set squares, ruling pen, etc., in the same way, in fact, as one would make a drawing.

## A FEW REMARKS UPON ADVERTISING

[THE following extracts from a paper read before the Ealing (England) Chamber of Commerce by W. J. Casey, advertising manager to Raines & Co., the leading English enlargers and notable advertisers, reported in *The Photographic Dealer*, should be read carefully, with a view to their application to your needs. Substitute showcase for shop window, and the remarks apply as well to photography as to anything else.—ED. W. P. M.]

One of the authorities has well defined advertising as "Every move which has for its ultimate aim the sale of anything"—a comprehensive, but none the less true, definition. We sometimes hear men who say, "I don't believe in advertising," but who, nevertheless, carefully dress their windows and then light them to the best advantage—which is just as much advertising as is taking a large space in a newspaper. This "I don't believe in advertising" attitude is an unfortunate one, especially when the unbeliever acts upon his convictions.

Modern business is war—the little manufacturer against the big one; the country retailer against multiple shop company and the coöperative society—

and if, here in Ealing, the retailer hasn't the latter to contend with, he is most certainly "up against" the big West End stores. If you agree with me in thinking that business is war, I will ask you to regard advertising as the cavalry in the conflict; unless your advertising cavalry is backed up by the big guns of good values and attentive service, it will be of no avail. And just as the successful general manœuvers his troops upon a carefully forethoughtout plan of campaign, so must the business man carry out his advertising upon an equally careful line of policy.

What are the forms that advertising can take? First we have the general appeal—the hoardings and the press, and a few miscellaneous methods, with which I will deal later; and secondly, the direct appeal in the shape of the letter, booklet, or circular. Backing up both of them in the case of the retailer, we have window dressing and his methods of managing his shop and staff.

Having regard to the degree of excellence to which the great advertisers have brought their advertising on the hoardings, I do not see how the retailer can use them without being completely overshadowed by the striking posters among which his will appear. This leaves us the press—and this I regard as the most important form of advertising the local advertiser has. I admit that the best advertisements that one sees in our local papers come from the outside and are done either by advertising agents or else by big firms who can afford to keep their own advertising manager. But in this week's local papers you will see Mr. Sanders' advertisement, which is far and away ahead of anything that any Ealing retailer has done yet. It opens with a good introduction, and use is made of the fact that he is disposing of the stocks of two shops well known to the readers, and then follows a list of prices with good descriptive matter. It is well displayed, and good use is made of illustrations. Now compare this with the space on the front page of a leading draper, in which the meagre information is given that the great winter sale is continuing day by day, and that there are bargains each day in January. In a weekly newspaper this last sentence is almost sufficient to tell the people that they need not hurry to come—there will be plenty of time later on. In the same issue of the *County Times*, a 3-inch double column is filled by exactly twelve words, including "Ask for free sample" and "Special Agent" and so little information is put into the remaining words that one is left ignorant of what the article is for—whether it is a preparation used by builders or for domestic purposes. Yet there is a striking window display of the same article, and one can imagine that the man who wrote the window cards would have filled the newspaper space with some very different matter.

This matter of careful wording and attractive setting is three-fourths of the secret of how to make advertising pay. Years ago Messrs. Raines used to have advertisements in one of the photographic trade journals in which the setting was not very attractive and in which the same matter was used from week to week. Nowadays we use a modern type and border and change the copy every week, with the result that we are often told by customers that the first thing they look for every week on opening their *British Journal of Photography* is our announcement. They do not look for "bargains," rather the reverse, in fact, because we are frequently advertising that we do not make cheap enlargements and that we compete only on the basis of quality. I mention these facts only to illustrate that it is not so much the size of the advertisement as what you put into it that tells.

In connection with the type used in setting an advertisement, it must be re-

membered that the artistic taste of the general public is steadily improving. It can be seen both in the decoration and the furnishing of our homes. How then can an advertiser expect to attract attention with printed matter that appears crude and that is stamped with the worst features of the Victorian period?

There are a number of what the printers call borders, some of which are very effective, and any advertiser ordering a series of advertisements in his local paper could probably arrange for a certain border to be used only for his space. *The Times* always has a number of well displayed advertisements using borders.

The great thing, though, is to get your advertising so full of facts as to make it news—information about the new goods or seasonable wares offered in your shop from week to week. People will soon get into the habit of looking for it, especially if you arrange to have it occupy the same position every week. Whenever I am travelling on the Southeastern Railway I make a point of buying the *Kentish Express*, and then of turning to the left top corner on the back page for the announcement of a Mr. Richardson, who has a fish and fruit business in Ashford, Kent. For some years I had looked for these advertisements of Richardson's, and therefore I was pleased to come across an article about him in *Printers' Ink*. I think the latter half of the article is sufficiently interesting to read to you now. It is as follows: "Perseverance and weekly change of copy have made the Richardson advertising a recognizable feature of the paper; his 'talk' is alive. Virile, chatty, sincere, candid, and perfectly and pellucidly familiar in style it has much the character of news. It is doubtless looked for as news every week—shopping news."

For eight years, nearly, this advertising has continued. During that time the business has grown and extended; Mr. Richardson has three branch establishments and a profitable side line in seeds. In this the slogan "seeds that grow" is used.

There has never been any fancy work or "fine writing" about it. As he would talk to you in the street at Ashford, so Mr. Richardson writes his copy, on a little desk in a corner of the shop, amid all the noise and turmoil of the business, with many an interruption, and week in, week out, in sickness and in health, never one ad. repeated, never one week neglected.

Surely, to have turned out, and to be turning out, copy like this is no mean achievement. Mr. Richardson's example should stimulate country merchants. Incidentally, the success of it shows what the provincial press, rightly used, is capable of.

Just two small points before I leave this question of newspaper advertising. First, whatever you are advertising for the week, make a point of having a good display in your windows at the same time. And the second point is to see that you have a good stock, not only of what you are advertising, but also of things likely to sell with it, the accessories, as the motorist would call them. For instance, the man who buys a fountain pen is easily persuaded to buy a bottle of ink.

The circular is a valuable form of advertising. The problem is how to avoid the delivery trouble, and the consequent association of your announcements with those of the traders whose handbills are so objectionable. My idea is to post them, and if the matter is not good enough to be worth enclosing in a halfpenny wrapper it had better not be sent at all to the middle-class people, who form the bulk of the residents of Ealing. Of course, a great number of people object to receiving circulars even by post, but their number is nothing like

that of those who object to the hand delivery.

Every time a monthly account is sent to your customers is a good opportunity for the enclosure of a circular. Only it should be tastefully produced and should be readable—one that contains some useful information. I think a good many of us in business are in the habit of blaming the weather or the Government or some other scapegoat for slackness in trade, when all the time, if we looked but closely enough, we should find some openings for business that we had neglected.

In all your circulars, as well as in your newspaper advertisements, avoid a jumble of different types and meaningless ornaments. One that I remember being used a few Christmases ago by an Ealing stationer contained no fewer than twelve different types. Good printing is invariably characterized by restraint. Circulars done in good style are not necessarily more expensive than the other kind, and even if they cost double, which they do not, it would still be a better investment to issue 500 good against 1000 bad ones. What I have said about the production of circulars applies in great measure to the business man's stationery—his letter-headings, billheads, labels, etc., should all be in good taste. Many houses now use on all their printed matter a name-block, that is, the reproduction of a hand-lettered design for the name, including the address, and sometimes the firm's catch phrase, or, as advertising men term it, their "slogan." We in Ealing have recently been made familiar with the "Underground, everywhere, quickest way, cheapest fare," and if some such expression can be thought out it may easily be made a valuable part of one's advertising. In Messrs. Raines we use the term "Raines' Service" to describe the work we are doing for photographers, and for some years now every advertisement of ours in *The British Journal of Photography* has ended with the phrase, "The service that helps." The idea behind it is that when the photographer has more work than he can do, he naturally thinks of "help," and by this time he involuntarily connects the "help" he requires with the name of the Raines Service.

Another form of direct advertising is the letter. This may be individually written or typed, or it may take the form of the imitation typewritten letter, which is printed in such a way as to resemble a letter typewritten on the ordinary typewriter. These have now been brought to such a degree of perfection as to call for the very closest examination to detect that they are not ordinary letters. But to do this the filling in of the name and address must be very carefully done indeed. The average typist cannot be intrusted with the work, and thus it is that there are firms that specialize in the work.

We have found this imitation typewriter letter a very successful form of advertising. On one occasion I had rather an amusing experience. A caller was announced, a photographer from a town in Suffolk, and he introduced himself by a reference to the letter that I had written to him the previous month. His name was not familiar, but he evidently took it for granted that I knew him, and so I had to proceed very cautiously until, by what the lawyers call "leading questions," I ascertained that he was one of the recipients of a batch of 2000 letters that had been sent out five weeks before. He went away—leaving behind him an order for an enlargement—blissfully unconscious of the fact that there were 1999 other photographers who had been offered the same thing. These letters may well be used by retailers at certain times of the year.

Linking up whatever forms of advertising the retailer may adopt is the win-

dow display. On this subject I speak with a certain amount of reluctance, as I have no practical experience; I therefore do so only in the capacity of the passer-by, the "man in the street," if you will. What window display is worth may best be gauged by the enormous rentals shopkeepers are prepared to pay for shops in busy thoroughfares such as the Strand and Ludgate Hill. Sometimes one is tempted to think that many retailers do not fully realize the value of their windows. It is only of late years that shopfitters have made the windows reach down almost to the pavement—passers-by can easily look down that distance. But there is only a certain height to which they can easily look up, a height varying, of course, with the width of the pavement in front and the depth of the space devoted to the window inside the shop. Above that height, whatever it may be, it is almost useless to expose the wares, and in consequence to stop daylight from entering the shop and thus adding to the artificial light bill.

Of late there seems to be an improvement in window tickets, but some of them appear to me to err on the side of overelaboration. A tastefully hand-lettered card in only one color is likely to impress its message on the beholder without detracting from the goods to which it calls attention.

Above all, it seems to me that the shopkeeper should try to do something new—like the Athenians of old, we all thirst for some new thing. Of course, if it be altogether new, so much the better, but, failing that, do something that has not been done in Ealing before.

It may be thought that advertising ends at the shop window, but I would remind you of that definition, "Advertising is every move that has for its ultimate aim the sale of anything," and therefore the whole of your system of shop management comes under the heading. It is difficult to say where advertising begins and salesmanship ends; in fact, they are but two different terms for the one thing, the persuasion to exchange your goods for your customers' money. And so you must have the coöperation of your staff. Foster the team spirit, the feeling on the part of your employees that they are, possibly small, but none the less necessary links in one chain. The effects of a striking advertisement, a fine shop front, and attentive assistants may all be spoiled in the end by the dilatory messenger boy who delivers the parcel.

Any paper on advertising would be incomplete without a reference to the trade journals. I consider it essential that every business man should carefully read his trade journal, not, as is sometimes thought, by way of duty to that journal, but to himself and his fellow traders. Even to learn lessons in advertising the trade journal may be well read.

## BRADY, THE CIVIL WAR PHOTOGRAPHER

After the lapse of fifty years it has been discovered that the Civil War was the first great war to be photographed. The thousands of negatives made during the progress of the war have been made very little use of. At last they have been re-discovered and a huge popular photographic history of the great struggle is being put into the hands of the people. The following interesting account of Matthew B. Brady, the first war photographer, is from an article on "Pho-

tographing the Civil War," by Henry Wysham Lanier, in the *American Review of Reviews* for March:

Mathew B. Brady was born at Cork, Ireland (not in New Hampshire, as is generally stated), about 1823. Arriving in New York as a boy, he got a job in the great establishment of A. T. Stewart, first of the merchant princes of that day. The youngster's good qualities were so conspicuous that his large-minded employer made it possible for him to take a trip abroad at the age of fifteen, under the charge of S. F. B. Morse, who was then laboring at his epoch-making development of the telegraph.

Naturally enough, this scientist took his young companion to the laboratory of the already famous Daguerre, whose arduous experiments in making pictures by sunlight were just approaching fruition; and the wonderful discovery which young Brady's receptive eyes then beheld was destined to determine his whole life work. For that very year (1839) Daguerre made his "daguerreotype" known to the world; and Brady's keen interest was intensified when in 1840, on his own side of the ocean, Professor Draper produced the first photographic portrait the world had yet seen, a likeness of his sister, which required the amazingly short exposure of *only ninety seconds!*

But Brady himself shortly became one of the little group of men who took up the new art and successfully adapted it to commercial uses. It is hard for us to realize today that a single lifetime measures the entire history of photography.

Brady's natural business sense and his mercantile training showed him the chance for a career which this new invention opened, and it was but a short time before he had a gallery on Broadway and was well launched upon the new trade of furnishing daguerreotype portraits to all comers. He was successful from the start; in 1851 his work took a prize at the London World's Fair; about the same time he opened an office in Washington; in the fifties he brought over Alexander Gardner, an expert in the new revolutionary wet-plate process, which gave a negative furnishing many prints instead of one unduplicatable original; and in the twenty years between his start and the Civil War he became the fashionable photographer of his day—as is evidenced not only by the superb collection of notable people whose portraits he gathered, but by Bret Harte's classic verse (from "Her Letter"):

> Well, yes—if you saw us out driving
> Each day in the park, four-in-hand—
> If you saw poor dear mamma contriving
> To look supernaturally grand—
> If you saw papa's picture, as taken
> By Brady, and tinted at that—
> You'd never suspect he sold bacon
> And flour at Poverty Flat.

### *The Camera Men of the Civil War*

Brady had made portraits of scores of the men who leaped into still greater prominence as leaders in the terrible struggle; and his vigorous enthusiasm saw in this fierce drama an opportunity to win even brighter laurels. His energy and his acquaintance with men in authority overcame every obstacle, and he succeeded in interesting President Lincoln, Secretary Stanton, General Grant, and Allan Pinkerton to such an extent that he obtained the protection of the Secret Service and permits to make photographs at the front. Everything had to be done at his own expense, but with entire confidence he equipped his men, and set out himself as well, giving instructions to guard against breakage by making two negatives of everything, and infusing into all his own ambition to astonish the world by this unheard-of feat.

We shall get some more glimpses pres-

ently of these adventurous souls in action. But, as already hinted, extraordinary as were the results of Brady's impetuous vigor, he was but one of many in the great work of picturing the war. Three-fourths of the scenes with the Army of the Potomac were made by Gardner; Thomas G. Roche was an indefatigable worker in the armies' train; Captain A. T. Russell took an invaluable series of the military railroads and of miscellaneous landscapes; Sam A Cooley was attached to the 10th Army Corps, U. S. V., and recorded the happenings around Savannah, Fort McAllister, Jacksonville, St Augustine, Beaufort, and Charleston during the bombardment; George M. Barnard, under the supervision of Gen. O. M. Poe (then Captain of the Engineer Corps), did yeoman's service around Atlanta; S R. Siebert was very busy indeed at Charleston in 1865; Cook, of Charleston, Davies, of Richmond, and other unknown men on the Confederate side, working under even greater difficulties (Cook, for instance, had to secure his chemicals from Anthony in New York—who also supplied Brady—and smuggle them through) did their part in the vast labor; and many another unknown, including the makers of the little *carte de visites*, contributed to the panorama which today unfolds itself before the reader.

### *Taking Photographs in the Civil War*

Imagine what it must have meant even to get to the scene of action—with cumbersome tent and apparatus, and a couple of hundred glass plates, whose breakage meant failure; over unspeakable back-country roads, or no roads at all; with the continual chance of being picked off by some scouting sharpshooter or captured through some shift of the armies. I have witnessed the harassed efforts of a distinguished nature photographer to get his plates safely into the Newfoundland wilderness in quest of salmon and caribou, and I am lost in admiration of the skill and patience which the war-time men must have put into this one matter of transportation.

The first sight of the queer-looking wagon caused amazement, speculation, derision. "What is it?" became so inevitable a greeting that to this day if one asks a group of soldiers about war photographs, they will exclaim simultaneously: "Oh, yes, the what-is-it wagon!" It became a familiar sight, yet the novelty of its awkward mystery never quite wore off.

Having arrived, and having faced the real perils generally attendant upon reaching the scenes of keenest interest, our camera adventurer was but through the overture of his troubles. The most advanced photography of that day was the wet-plate method, by which the plates had to be coated in the dark (which meant in this case carrying everywhere a smothery, light-proof tent), *exposed within five minutes*, and developed within five minutes more! For the benefit of photographic amateurs and to show the trying nature of the work, here is a statement of the "collodion" process which was employed—on battlefields, mind you, and in all sorts of weather conditions:

The photographer first immersed 80 grains of cotton wool in a mixture of 1 ounce each of nitric and sulphuric acids for fifteen seconds, washing them in running water. The paroxylin was dissolved in a mixture of equal parts of sulphuric ether and absolute alcohol. This solution gave him the ordinary collodion, to which he added iodide of potassium and a little potassium bromide. He then poured the iodized collodion on a clean piece of sheet glass and allowed two or three minutes for the film to set. The coated plate was taken into a "dark room" which he carried with him, and immersed for about a minute in a bath

of 30 grains of silver nitrate to every ounce of water. The plate was now sensitive to white light and must be placed immediately in the camera and exposed and developed within five minutes to get good results, especially in the South during the summer months. It was returned to the dark room at once and developed by pouring over it a mixture of water, 1 ounce; acetic acid, 1 dram; pyrogallic acid, 3 grains, and "fixed" by soaking in a strong solution of hyposulphite of soda or cyanide of potassium.

## GOOD MEDICINE

SOME fifteen years ago there were two physicians who were starting their career, and after watching the results of the work of other physicians and surgeons, and after making some mistakes themselves, they came to the conclusion that there was not as much time devoted to diagnosis as there was to the operation or treatment, and that the reason there were so many failures and slow cures was because only about one-quarter of the time was put into the diagnosis as was put into the operation. Working on that theory, they decided to revise the proportion, and they began putting their few patients through a most vigorous and thorough examination before they prescribed to use the knife. They divided the work, and one would diagnosticate a case first and then the brother would make his diagnosis, then both together would compare notes, and, if necessary, make a third diagnosis together. The results soon began to justify this theory, for, on account of the unusual care and amount of time devoted to diagnosis, when the time came to operate they found that they knew exactly what they were going to find and how they were going to correct it, and the actual work was done in a shorter time with less strain to themselves and less pain and danger to the patient. Soon their operations and cures began to gain fame throughout the country and their practice grew rapidly. Some said that they were workers of miracles, and they were hailed as the most successful surgeons of the country. They replied that they were no better than thousands of others, but that they conscientiously followed their original plan of an exhaustive diagnosis and that they had become so expert in that field that they practically made no mistakes. Their practice is now so large that they have a corps of ten or twelve competent physicians and specialists to help them, besides a large office force and a big hospital that takes care of their patients. They are the Drs. Mayo, of Rochester, Minn.

They succeeded because they knew all about their business before they acted. They knew what they were going to do and what they were trying to accomplish before they did any work. They did in a profession that thing that keen business men had pronounced to be the only safe and sane way to conduct business in conformity with modern methods and modern competition. And they succeeded. Now other doctors from all over the country and all over the world are studying their methods and following their lead.

Photography is a profession and skill is the principal article in the transactions. The materials throw it into the commercial field to a certain extent, but the ability of the operator and the fame of his skill lifts it above the realm of the purely commercial. But if a doctor can apply modern business methods successfully, why cannot a photographer? He

can if he will only believe it. The photographer should practise diagnosis, and here are some of the things he should know before he puts a plate in the holder: The disposition of the subject, the education and the state of development of the taste for good work, the average amount of returns of extra negatives exposed on all the orders of the past year, the average amount paid for pictures from ladies, from children, from men, the susceptibility of the subjects to flattery, and whether such flattery should be subtle or broad, the influence that could be obtained through each subject —in fact, everything that will have its effect on the quality of work that should be made, and the amount of money that can be obtained.

To arrive at this stage it will mean a study of the business on the basis of averages to know the amount of the average of all the sittings, then of all resittings, also the income from duplicate orders, and enlargements and frames, and any other department that yields a revenue. With the average per dozen constantly in mind, then the effort to keep up to the average, or to exceed the average, is a stimulus that will be found extremely beneficial. With actual information of the yield of extra negatives, and the profit yielded by different numbers, the loss of material is decreased and the number used will be kept near as possible to the highest yield. The number of people who come into a gallery and the proportion who buy pictures is well worth study. If one out of ten has a sitting, then, if the average attendance of thirty a day can be raised to sixty a day, the number of sittings is doubled. Advertising in some form is necessary to get them there. Effort and skill are necessary to get an order from the proper proportion of all who come in the door.

Statistics show, according to Mr. G. W. Harris, president of the National Photographers' Association, that every inhabitant of this country has his picture made once in about twenty years. That has got to be remedied. If a concerted effort is made to bring photography before the public in such a favorable light that this average can be lowered, it will make a tremendous increase in the volume of available business. Who is going to do it? It is certain that the dry goods merchant isn't. It is certain that nobody is going to do it but the photographer and the dealer or manufacturer directly interested in the photographic business. It is also certain that it will not be accomplished except by constantly bringing photography before the public in attractive forms through advertising, personal contact, and publicity of all kinds. The average must be lowered, and the advertising problem is one that concerns every individual in the business, for what will benefit some will eventually benefit all, and a general wave of energetic progressiveness will increase the average for everyone.

Can it be done? We are decidedly of the opinion that it can. Astute business men in other lines have increased the use of numberless articles that people thought had reached their maximum consumption. The advertising pages of the papers and magazines show how it was accomplished, and the publicity bureaus, maintained by a number of industries, show what can be accomplished by systematically calling attention to any article. The National Association might well establish some such bureau, whose duty it would be to supply the press, both daily and periodical, with interesting literature and illustrations, bringing photography to the attention of the public. But as such a movement is only one of our "pipe dreams," we are not pressing that point now, but are trying to stir up a desire for some systematic way for each individual to study the little things that will help to build

up better orders and better profits. The study of details is "good medicine" for any business. The having of this information at one's finger ends is also "good medicine," for its moral effect is pronounced in the rousing of the ambition to make every stroke tell and every job keep up to, or go ahead of, the average. It is the total of the constant strokes that make the big impression, and it is the little excess on each order that brings up the average. It is the pushing of the profitable parts of the business that makes the good showing at the end of the year.—*Trade News.*

## WASHING

THE simple operation of washing, which so many workers are so apt to treat in a careless, haphazard way, as if it were a mere matter of form, is really of the greatest importance, and any neglect in this direction brings speedy retribution. The majority of photographic flaws and defects, of the spot and stain family, are, in fact, due to nothing else than inadequate washing, at one stage or other. Even when the print or negative comes safely through without apparent blemish, it is not at all unlikely that rapid fading or deterioration has been rendered certain by a hurried and imperfect wash at the finish.

### *Washing in "Running Water"*

A common method of washing is to place the negative or prints under the tap, in a dish, allowing the water to run or drip steadily on them. Unfortunately, the water is not changed so quickly as might be thought; that coming from the tap, for the greater part, merely runs over the surface of that in the dish, and it is only by gradual diffusion that any change occurs at all. This, therefore, is a very unsatisfactory method of hypo elimination, and does not really deserve to be called washing in running water.

It has, indeed, been shown that plates may be washed film upward in this way for as long as twelve hours, and yet give decided indications of hypo when tested. If the negatives can be placed film downward, supporting them at the edges in some way, the washing is very much quicker, for the hypo falls downward out of the film. But washing plates in horizontal dishes is not a good plan unless two dishes can be used, the water being changed occasionally and the negatives transferred from one dish to the other, cleaning out the first dish before refilling it, to remove any hypo that has settled at the bottom.

The same remarks apply to films as to glass negatives, with the addition that gentler handling is necessary. Care should be taken that films are kept moving, and not suffered to lie or stick together in a pile; but, in moving or shifting them, see that the sharp edges and corners of the celluloid do not cause scratches.

### *Washing Negatives in Tanks*

Tanks in which negatives can be washed in an upright position are much better than dishes, since the hypo falls to the bottom; but they should be provided with a syphon for continually emptying the water, or there is no great advantage. The syphon automatically discharges the water at the same rate as it enters the tank from the tap, the latter being turned on just sufficiently to provide for this. In consequence, we have

what is, in actual fact, washing in running water.

As, however, there is still a chance of hypo settling at the bottom of the tank, or in corners, there should be a wire rack provided for the negatives, with a handle for lifting; so that, at least three or four times during the washing, the negatives may be lifted out and the tank emptied and rinsed. With this precaution, one hour's washing should be quite sufficient. Tanks are greatly to be preferred to dishes for prints as well as negatives, on account of the greater volume of water contained. Syphon washers of various kinds have long been obtainable for this purpose. Paper obviously retains hypo more than glass, so that prints require to be moved about more and to receive a greater number of changes than will suffice for negatives.

*Washing with Limited Water Supply*

When the worker has not got a constant supply of water available, the best thing for washing negatives is to get a couple of fairly large pails and a small brass tap to screw on. Bore or punch a hole in the side of the pail close to the bottom large enough to screw the tap into, taking care not to make it too large. Screw the tap in, and, if it leaks at all, stop round with putty. Fix two shelves at such a height that the syphon washing tank may stand on one of them, discharging into one pail placed on the floor, while the pail with the tap is stood on the shelf above.

The top pail is filled with fresh water as required, the tap being shut off while carrying it, the lower one being emptied at the same time, first plugging the syphon of the tank with a cork. If both pails are of identical size, overflow is impossible. Such an arrangement is also well adapted for washing prints, substituting a tilted dish for a print washer for the negative tank. A number of soakings and frequent changes are more effective from a hypo-eliminating point of view than prolonged washing in running water.

This is a fact that may be made the most of by those whose water supply is really limited in quantity. Two dishes or tanks (without syphons) may be used, the prints or negatives being given a five minutes' soaking in one, and then transferred to fresh water in the other, while the first is rinsed and refilled. Prints should be placed in a pile and squeezed gently between the hands at each change, allowing most of the water to drip off them before placing in the newly filled dish.

Under such conditions as those described eight changes will be sufficient for negatives and twelve for prints. This method sounds tedious, but it must be remembered that if comparatively little water is used, as will be the case, we must be prepared to make up by greater attention, and we shall have the satisfaction of knowing that our labor has been well expended, and our prints or plates are well washed.

## PHOTOGRAPHING POLISHED SURFACES

Reflections are sometimes a trouble to a photographer. One of the simplest ways of overcoming the reflections is to sprinkle the floor of the studio or room in which the objects are to be photographed sufficiently to render the air slightly moist. Then, when all is ready, drop a lump of ice into the vase or jug. This will chill it and immediately the moist air of the room will condense on it

and dull the whole surface. The camera should be ready for the exposure (see that the lens is not clouded), for as the condensation continues it will begin to drip down the sides of the vessel. If more than one negative is required, remove the ice from the vessel till ready for the second exposure.

Another way for dealing with polished metal is to take a piece of putty—not too soft—and dab it evenly all over the bright surfaces. This will render them non-reflective and so remove the difficulty. The putty can be cleaned off and the gloss restored by means of a plate brush and whiting with a little benzole. Neither the dabbing with putty nor the using of ice can injure either glass or metal. Don't make the mistake of underexposure. Go for the shadows, and not simply for the high lights. These will be overexposed, and tentative development should bring out the shadow detail before full density is obtained.

One of the easiest objects to copy, so far as reflection is concerned, is a daguerreotype. The surface is so bright and so even that it reflects like a mirror —that is, it will reflect the light at the same angle that the light strikes it, and so, if only a sidelight is used to illuminate it, there will be no direct reflection into the lens of the camera.

Sometimes machinery has to be photographed. In the case of new machinery it may be painted or varnished, according to the whim or custom of the maker. There is a period in the finishing of a machine when the parts to be painted receive a priming coat. If the photographer can take the negative at this stage, his work is rendered easier. The great trouble with machinery is often its position. A machine is a solid object and stands where it is built—that is, a photographer cannot move it at will. If the machine has to be dulled to kill reflections, paint it over with flatting color. This can be cleaned off with a handful of cotton waste dipped in turpentine or benzoline.

In photographing silver plate we may find an inscription. Take the plate to a copperplate printer and ask him to ink the inscription. The letters, being now in black ink, will photograph much clearer, and a little turpentine on a rag will clean the ink out.

The photographing of gold letters cut into mottled and highly polished marble —on memorials—is often difficult; in fact, if the letters are small, it is often almost impossible to read them on the stone itself, especially if the gold has partly flaked off. The best way out of the difficulty is to mix some whiting to a stiff paste with a little water and fill in the letters with it until they are flush with the face of the stone. The white matt letters will now be distinguishable in the photograph. The filling can easily be removed from the letters by either washing or brushing it out.

## LETTERING NEGATIVES

It is at times necessary to write or print some title on a negative. The most common way to obtain black lettering is to scratch the film away with a darning needle or sharp penknife and leave the letters clear glass. If it is wished to have black letters on a small strip of white, paint a narrow strip of Indian ink or other opaque substance on the face of the negative, and when it is dry scratch out the letters carefully. This will give black letters on a white ground. Another way is to bleach out the letters.

# WILSON'S PHOTOGRAPHIC MAGAZINE

A MONTHLY MAGAZINE FOR PRACTICAL PHOTOGRAPHERS

Founded in 1864 by EDWARD L. WILSON
MRS. EDWARD L. WILSON, Publisher and Proprietor
L. WINIFRED WILSON AND T. DIXON TENNANT, Editors

EDWARD L. WILSON, 122 EAST TWENTY-FIFTH STREET, NEW YORK
*Entered at New York Post-office as Second-class Matter*

**Yearly subscription in advance, United States and Mexico, $3.00; Canada, $3.25; Foreign Countries, $3.50. Single copies, 25 cents. Subscriptions begin with current issue unless otherwise ordered. Original manuscripts on photographic subjects are solicited, and, if accepted, will be paid for on publication.**

## EDITOR'S TABLE.

THE sympathy of every photographer will go out to that grand old man of photography, George G. Rockwood, in the loss he has sustained in the death of his son, George Henry Rockwood, who died in the early part of February. He practised photography for twenty-five years, of which twenty were spent on upper Broadway, New York, where he had made a name for himself as a photographer of children. He was a dear, clean, lovely character, domestic by nature, yet a bachelor, and the constant companion of his father, who suffers the double loss of a devoted son and boon companion.

IN the death of Henry C. Phillips, on January 29, Philadelphia loses one of its oldest and best-known photographers. Mr. Phillips opened his first studio at Tenth and Market Streets, Philadelphia, some fifty years ago. In 1868 he went into partnership with Samuel Broadbent, and moved to Chestnut Street. The partnership lasted until the death of Broadbent, in 1881. Later, Mr. Phillips took into partnership his sons, Ryland W. and Howard Phillips, and only a few months ago the new studio was opened at 1507 Walnut Street. Born in 1834, he had passed the allotted span of life and had rounded out half a century in photography, during which time he upheld the best traditions of his profession.

THE Eastman Kodak Co. have just issued a very fine souvenir of their 1910 advertising contest. All the winning prints are reproduced, also several pictures that were bought by the Company because of their good advertising qualities. A study of these pictures and a right idea of the real object of the prints will be a great help to competitors in the 1911 competition. The Eastman Company will be glad to furnish copies of the souvenir on application.

WE received a neatly engraved announcement of the opening of Mr. D. D. Spellman's new studio in Detroit. We gather that the studio is one of the show places of the city, and we wish Mr. Spellman much success with it.

IN our January issue we erroneously credited the portrait of Sir Henry Irving to J. Craig Annan, of Glasgow. The maker was Frank Eugene, New York and Munich, as could be seen by the signature on the top left-hand corner of the print.

WE are fortunate in being able to reproduce in this issue so many clever and interesting pictures as those of Mr. Chas. L. Peck, of Buffalo. His portrait of a man is a masterpiece and one of the best things we have seen in a long time.

APROPOS of Mr. B J. Falk's photographic joke book, the following shows that "a joke is a joke for all that," even when intended for an advertisement. "Your own baby, if you have one," advertised the enterprising photographer, "can be enlarged, tinted, and framed for $9.75 a dozen." "Blue Bell."

THE Intermountain Photographers' Association holds its fourth annual convention at Salt Lake City on April 4, 5, 6, and 7, for which a good program has been arranged.

THE Los Angeles Y. M. C. A. has organized a Camera Club, and would like to get into communication with other clubs here and abroad. Mr. H. Edgar Fry, 715 South Hope Street, Los Angeles, Cal., is the Secretary.

EVIDENTLY an error crept into the make-up of one of our New York contemporaries, which landed nine of New England's prominent photographic workers on to the Board of Directors of the Eastman Kodak Co. A good place to get to, but not quite so easily reached.

By S. H. Lipshey, Brooklyn, N. Y.

# WILSON'S

# PHOTOGRAPHIC MAGAZINE

FOUNDED IN 1864 BY EDWARD L. WILSON

VOL. XLVIII APRIL, 1911 No. 652

## THE COMING NATIONAL

WITH all the signs of approaching spring and summer come the first murmurings of the great photographic summer festival, the great annual meeting of the Photographers' Association of America.

Growing in power and prestige as the years go by, the National is becoming more and more all its name implies. The thirty-first annual meeting of the P. A. of A., the St. Paul Convention to be held in the city of St. Paul, Minn., July 24 to 29, promises to be a greater success than any previous meeting.

This is only as it should be. You cannot roll a snow ball down a snowy bank without increasing its size. As the number of State Associations affiliating with the National Association increases, its annual meeting will become more widely attended, more useful, more important, and more enjoyable.

The number of professional photographers throughout the country is not so great yet but that the bulk of them could not get together in our larger auditoriums, and by concerted action do much toward their material advancement, to say nothing of the social pleasures derived from such reunions.

We have heard much lately of the great results that can be achieved by scientific management. We expect the St. Paul Convention will give a splendid demonstration of scientific and systematic management. President Harris is well known as an expert in scientific and systematic studio management and assisted by an unusually alert and active set of officers, it goes without saying that he will be on his mettle to make a great convention.

One announced feature alone will make this convention well worth travelling any distance to attend. We refer to the School of Instruction to be conducted by the great Rudolf Dührkoop, than whom there is no greater all round portraitist. He will be ably assisted by some of our leading workers. Arrangements are being made whereby all work will be finished and displayed before the close of the Convention.

Many other attractive features are

being arranged, including some unusually interesting lecture-demonstrations, and these, with the School of Instruction, will very much more than repay your outlay, however far you may travel to attend.

The social and entertainment end of the Convention will be on a much more lavish scale than ever before. The photographers of the Twin Cities, St. Paul and Minneapolis, are planning a right royal time for every man, woman, and child attending the Convention. Don't be parsimonious about it, and simply treat yourself—take your wife and family.

With the Convention so far West, an unusually good opportunity is offered to visit the wonderful Yellowstone Park. We learn that the Northern Pacific Railroad is arranging a special Convention personally conducted tour of the Park for the week following the Convention. This will enable you to kill two birds with one stone, and visit two Nationals at the same time—our great national park, and our greatest National Convention.

Think it over seriously, and begin to lay your plans now. You are entitled to a vacation, and in no other way can you take one that will be money into your pocket and not out. The time, July 24; the place, St. Paul, Minn.

## NEWS OF THE NATIONAL CONVENTION

No wide awake photographer is prepared to admit that he would willingly let a chance to make 100 per cent. profit escape him. To say that an investment of one hundred dollars in a visit to the forthcoming National Convention at St. Paul in July is a 100 per cent. investment is to put it altogether too mildly. We are not making it too strong when we say that 1000 per cent. is nearer the mark.

It has been proved time and again that a small sum of money invested in a visit to the National Convention of the year has been productive of such great returns that the investor has never ceased to become a permanent visitor to the National and has yearly shown increased profits in his business, profits made by the knowledge he has gained, the new ideas and styles he has seen, the contact with big, successful men in the same line of business.

The National Convention for 1911 is planned along bigger and broader lines than ever before. A visit to it will be an education in itself, every day of your stay a red letter day. It may easily be the turning point of your career.

St. Paul, Minn., is situated in one of the most beautiful parts of our country, and in summer time is easily reached by rail, or by steamer over the Great Lakes. Merely looking at it as a necessary vacation, you'll enjoy the trip to St. Paul in July.

Of course, you want to know what you will learn, and who will teach you at the Convention.

First and foremost, that wonderful photographer of international fame, Rudolf Duhrkoop, has been engaged to come to this country, expressly for the National Convention, and for three days he will show, in a studio improvised in the big lecture hall, just how he gets those beautiful effects we have all so admired. He will show us how he "approaches" his subject, how he handles and poses them to get those full-of-action pictures for which he is so celebrated, and, as he knows the

English language well, he will tell us how and why he does everything.

Then there will be lectures of unusual instructive value, not the ordinary, meaningless flow of words we are all used to, but live, vital facts pertaining to your business as portrait makers and business men.

The list is an unusually strong one and the full particulars will be given you a little later.

Twin Cities have joined issues to look after that end, and they are the most hospitable fellows on earth.

The Convention Hall itself is without question the finest that has yet been placed at the disposal of the Association. There are no pillars or arches to obstruct the vision in the main or manufacturer's hall, and it is larger than any place we have been in heretofore. The scheme of decoration

National Board of Officers of the Photographers' Association of America.
Harris Tyree Larrimer Dozer Townsend
Photo by B. G. Golling, St. Paul, Minn

The National Picture Exhibit is, of course, one of the big things of the year. Here the very latest ideas, lightings, posings, etc., are exemplified. Here is unending material for study, and criticism and discussion. Here you can compare your pictures and your progress with the other man

The entertainments are in good hands. The photographers of the will make the exhibit a splendid spectacle.

Then, too, if you have the time to spare, you can join an excursion to the Yellowstone Park—Nature in her most marvelous form—which is being planned to start directly after the Convention and for the Association only. You will learn more of that later.

Begin then now, today, this minute, to plan, and save, and prepare for the National Convention at St. Paul.

Use the blanks to be found in our advertising pages and help the officers that much, and yourself that much more.

Our illustration shows the men who are preparing all this for you, the officers of the P. A. of A. for 1911.

First, there is G. W. Harris, of Washington, D. C., a man of intense energy, a human dynamo, who has made a success of his own business by using business methods and common sense. Next, there is Ben Larrimer, the First Vice-President, serving his second year on the board—an artist in many of those things that appeal to the finer senses, a student of human nature and a broad guage man of affairs. He is the "balance wheel" of the board. Then comes Charles F. Townsend, one of the new members, but not new in Association affairs. A hard, enthusiastic worker, determined to make his share of the work a success, and a good representative of the energy of the West. L. A. Dozer, the Treasurer, you all know. He figures and figures, saying little, but when he does speak or suggest, it carries weight. And last, we have Manly W. Tyree, the new Secretary, a man who is going to make good this year and in future years in the service of the Association; a ready speaker, a sincere photographer, a firm believer in fellowship among photographers.

It is a strong board, well calculated to make the 1911 Convention a success.

## FROM THE TREASURER OF THE P. A. OF A.

We are approaching the time (May 1), when dues in the Photographers' Association of America are payable. The Treasurer would suggest that old members be as prompt in remitting as possible, and those who anticipate joining the National Association this year are requested to do so NOW.

Every professional photographer in America should hold membership in the P. A. of A. This, the greatest photographic organization in the world, is doing things these days; and still greater things are to be accomplished in the future. Your good will, your influence, and your membership are needed. In return, the association will be of assistance and a benefit to you whether you find it convenient to attend every convention or not. Keep up your membership, even if the convention is out of your territory; it may be back next year. You will find a regular membership carried from year to year, a profitable investment.

The membership buttons for 1911 are ready for distribution, and they are entirely different in design from any used in previous years. With your membership button and receipt, will be mailed an "identification button." This is of white celluloid, on which is a number which corresponds with the number on your receipt. At the St. Paul convention there will be distributed printed lists with names, address, and number of every member whose dues are paid. Wear your membership button and your identification button in a conspicuous place, get a list at the box office, and no introductions will be necessary.

The *Association Annual* will be ready early this year—just as soon as the program is complete. The *Annual* will

be mailed only to those who pay dues (one copy for each membership). This publication is as attractive as last year's number, and costs the Association $1.00 per copy, and you will find it well worth the price. Pay dues early and have your copy mailed to you.

The St. Paul convention promises to be one of the best in the history of the Association, and all should attend. Arrange to spend your vacation in the Twin Cities, the last week in July, where you will find not only pleasure, but profit, awaiting you. Watch these columns for detailed program.

Below is an application blank for membership in the P. A. of A., also one for space for exhibiting pictures. Fill out the blanks, get busy, and make three of the best pictures you can produce, send them to St. Paul, then come yourself and spend the week of July 24 to 29, with the hospitable people of the northwest, and I am sure you will be glad it was suggested to you. There will be special entertainment and instructions for the ladies, so bring them with you. They will enjoy it as much as you.

If you are not a member of any affiliated state association, send $5.00—$2.00 membership fee, and $3.00 dues for 1911. If you are in good standing in any affiliated organization, send membership card for 1911, or your treasurer's receipt for 1911 dues and $2.00. Card or receipt will be returned with your membership button.

Below is a list of St. Paul hotels, with rates granted photographers during convention week. It would be wise to make reservations early. If less expensive rooms than those listed are desired, a communication to B. C. Golling, Chairman Local Entertainment Committee, Ryan Building, St. Paul, Minn., will secure for you what you want. But remember, pay dues and take out memberships early.

Application for membership in the Photographer's Association of America.

I am owner
part owner
manager and desire membership in the P. A. of A.
employee of
manufacturer
dealer
representative

Enclosed find $2.00 membership fee and $3.00 dues for 1911. (If check is sent add 10 cents for collection.)

Name
Street
City
State

If you are a member of an affiliated association send your 1910 membership card or receipt for 1911 dues with $2.00. No membership fee is required and but $2.00 yearly dues. Employees, manufacturers, dealers, or their representatives take out associate membership and pay dues only, $2.00 per annum.

Mail with remittance to L. A. Dozer, Bucyrus, Ohio.

Application for Space.

To be mailed to first Vice President Ben Larrimer, Marion, Indiana. I will exhibit three prints at St. Paul convention. Please reserve space for same.

Name
Street
City
State

Hotel St. Paul (headquarters), European plan, $2.50 per day and up.

Merchants Hotel, European plan, $1.00 to $2.00; with bath, $1.50 to $2.50.

Hotel Jewel, European plan, $1.00 to $2.50.

The Frederic, European plan, $1.00 and $1.50; with bath, $1.50 to $2.50; $1.00 added for second person in room.

Hotel Northern, European plan, 50 cents to $1.50; American plan, $1.50 and upward.

Hotel Foley, European plan, 75 cents to $1.50; American plan, $2.00 to $2.50.

Hotel Euclid, European plan, $3.50 to $12.00 per week.

Hotel Magee (Stag Hotel), European plan, $1.00 to $2.00 per day.

Additional hotels at all rates at Minneapolis, ten miles distant via trolley, fare 10 cents.

# SHORTENING THE FOCUS OF LENSES FOR STUDIO WORK

BY P. R. SALMON

PHOTOGRAPHY, it is said, is the child of optics and chemistry, and although each do their share in the work of producing a picture, comparatively little attention is paid by the average professional photographer to the optical side of the art. It is one that usually frightens the average worker, probably on account of the use made by writers on the subject of elaborate mathematical formulæ, and such terms as Gauss and nodal points, circle of confusion, chemical and visual focus, refractive indices, etc., all interesting and important enough in their own particular way, but subjects which the average bread and butter professional, as the late H. P. Robinson called him, has little or no time to bother about. Having purchased a lens, and one which gives satisfaction, the photographer usually banishes optics from his mind, because what is probably his greatest trouble is then over, and I need hardly say that I refer to the raising of the money for the purchase of the lens.

A time when perhaps a photographer does begin to think about optics again is when he changes his studio and finds that the portrait lens he has become accustomed to, is an inch or two too long in focus to picture a full length figure, or perhaps a group, owing to the working space in the new studio being more confined. In copying and in ordinary wide angle work also one often longs for a lens of trifle shorter focus than the one one has. The photographer who is as rich as Crœsus can, of course, have a whole battery of lenses, each of a different focus, but not so the poorer brethren, and the ways and means of adapting a lens to serve the desired purpose have to be devised, and it is here where "spectacle" or "supplementary" lenses come in.

I cannot help thinking that the average photographer pays too little attention to supplementary lenses; the use of them is so very simple, and they enable the worker not only to shorten the focus of an ordinary lens, but in addition they make such a lens quicker in action, because of the increased size of the working aperture of the lens, that is to say, the stop.

I must confess that I paid little attention to supplementary lenses, until one day I was enlarging direct in the camera when I found that my lens was too long in focus, or, to put it another way, the camera bellows would not extend far enough to enable me to enlarge direct to the desired size. I was using a lens of six inches focus, whereas one of four or five inches would have been better. Having a single view lens of about twelve inches focus, I unscrewed it from its mount and placed it against the diaphragm in the rectilinear lens I was using, when I found that the combination gave me a lens of four inches focus. I then tried other single landscape and other spectacle lenses in my old Petzval portrait lens, and in a more modern portrait lens, when I found that they shortened the focus and acted admirably.

Single or spectacle lenses may be had from opticians very cheaply, some dozens, in fact, may be had for the price of the cheapest of mounted lenses. Single or supplementary lenses are of two kinds—positive and negative. Positive lenses make the focus of a given lens shorter, whereas negative lenses make the focus longer. A positive lens magnifies and is thicker in the centre

than at the edges, whereas a negative lens, when looked through, makes the objects seen through it appear smaller, and is thicker at the edges than in the centre. The spectacle lense should be as thin as possible, otherwise the optical properties of the original lens may be interfered with. It should be fixed in the mount up against the diaphragm, and the surfaces should be perfectly vertical, if at all slanting, some distortion may appear, but if properly fitted and used, the results will be in every way equal to those obtained with the original lens.

The question of focus has to be considered, not only the focus of the lens to be fitted, but also the focus of the original lens and the focus one desires to make it with the help of the spectacle lens. Fortunately, the rule for ascertaining the focus is a very simple one. A rough and ready rule is to remember that the shorter the focus of the supplementary lens used, the shorter will the combined lens be. If, for example, a spectacle lens of six inches focus were placed in a lens of six inches focus, the combined result would be a lens of three inches focus, whereas if the spectacle lens were of twelve inches focus the combined result would have a focus of four inches. As a rule, however, one will want to go to work in quite a different manner, namely, to find what focal length of spectacle lens is necessary to alter the focus of a given lens to a given extent, and to find the focus of the lens one must use in the doublet the rule is: Multiply the focus of the lens to be altered by the focus desired, and divide the product by the difference between the two, or in other words, by the original focus less the focus desired. Example: find what spectacle lens is necessary to make an existing ten inch lens into one of six inches focus. According to the above rule we multiply 10 by 6, which equals 60; the difference between the two (6 and 10) is 4, and 60 divided by 4 gives us 15, which is the focus of the single view or spectacle lens required. Therefore a lens of fifteen inches focus placed against the diaphragm of a ten-inch lens will reduce it to six inches focus, and as such a single lens can be obtained for less than a dollar, this economical method of altering the focus will appeal to many. Authorities on optics tell us that the correct position in which to place the single lens in the tube between the front and the back lens, varies according to the separation of those lenses, but I have found that the simple act of placing the extra lens against—and of course covering—the diaphragm, to suit all practical purposes. One point to bear in mind is that if the lens tube is long and the lens is made very short in focus, the corners of the view will be cut off by the lens tube, but as this cutting off can easily be seen upon the focussing screen, no one need spoil a plate. The defect will rarely be met with if the lens is shortened only a few inches.

I referred above to the power supplementary lenses had of enlarging the working aperture when the focus is shortened, and this will be clear to those who know how stops are measured. The diaphragm will obviously let through more light because it is brought nearer to the plate. If, for example, the ordinary lens, before being fitted with a supplementary lens, is of eleven inches focus and has a stop one inch in diameter, that will be U. S. No. 8, or *f*/11. To make such a lens into one of eight inches focus a supplementary lens of 29⅓ inches is fitted, when the stop (originally No. 8) will be only eight inches from the plate, the working aperture therefore becomes No. 4 or *f*/8, and twice as quick.

Much more might be said about sup-

plementary lenses and their usefulness to the professional, but I hope I have said enough to arouse the interest of any professional brethren who, like myself, cannot afford a large series of mounted and finished lenses. One has only to make a few simple experiments with an ordinary magnifying glass or even one lens from a pair of spectacles, to prove what such supplementary lenses will do in the way of altering the focus of an existing photographic lens.

## SPRING OPPORTUNITIES

We suspect that at some previous period of our editorial existence we have mentioned the show case; in fact, we have mentioned it so many times that we are ashamed to look a show case in the face, and yet, in spite of the fact that all evidence goes to prove that our past utterances upon this subject have failed to stir any great amount of enthusiasm, there is something on our chests that has to be got rid of, so, inasmuch as we are good at dodging oyster cans, we are going to let it come right out. If we don't touch anybody, it will not be the first time we have failed to accomplish what we set out to do, and if we do succeed in starting something, then we will be repaid for all the danger we have run in springing any advice or suggestions about the show case. First and foremost, this is the season for the baby crop to come out into the weather and be photographed. We have mentioned this fact before some several times, if not more. But there is money in the kids, and they are worth several changes of show case in order to bring the subject of photographs to the attention of the mothers. The kids don't want their pictures made any more than a dog wants a can tied to his tail, but it is fun for the mothers and they are willing to pay for the privilege of getting pictures of their children, and watching the contortions of the photographer in his effort to get a pleasing expression. Under ordinary conditions we do not advise any one to make a monkey of himself, but when it comes to making a baby's picture, the photographer who is too dignified to go the limit in order to please the parents (we do not consider the kid), is not deserving of the fruits of the annual baby crop.

"In the spring the young man's fancy lightly turns to thoughts of love." I don't know who said that first, but according to my best recollection it was not a photographer. But it is a mighty good thing for a photographer to keep in mind, for there is always a demand for locket pictures and, in fact, pictures of all kinds, to supply the demand of young people who are, or who fancy they are, in love. Even if he does call every night in the week, it is absolutely necessary to supply both parties to the deception with sundry and many photographs of each other, in order that neither might suffer in the absence of the other. Of course, one might be absent and the other not, so only a photograph of the one who is absent would be necessary, but lovers should be warned of the danger of both being absent at the same time, and of the calamity that might overtake them unless they patronized the photographer liberally.

Then there is the Easter hat. (We are not talking about lovers now, we are talking about married people.) Of course the husband does not want to pay for the hat, and a photograph of

it, too, but that is none of his business. If he is able to give her a new Easter bonnet, he is able to have it photographed, and it is not necessary to discuss the matter with him, just make a display in the show case that will make *her* want the picture, and even if he does kick, "love will find a way." Every time you meet a new spring hat on the street you are face to face with an opportunity, and while some advise the policy of grasping the opportunity every time you come face to face with it, in this case it might be well not to risk being put into jail by following this advice, but just take advantage of the opportunity and do something to induce it to have its picture made. And confirmations. They must have a picture made while they are good. It is customary, during the Easter season, for young people to stand up for all that is good, and to make professions of their determination to choose the right path through life. Some of them will stay in the right path, but some will wander; yet, take them by the bulk, it is the chance of a lifetime to supply them with pictures that they can look at in later life and say, "When that was taken I was so young and innocent." If they could realize what this picture would mean to them in after years, they would pay handsomely for it, and they ought to.

There are lots of good customers walking around loose during the spring season, and we dare say that when the open season for hunting comes in the fall, a lot of our readers will tramp the fields day after day and undergo all kinds of discomforts, if only the hunting is good. Business is business, and now the hunting season for business is open and the hunting is good, so lets put the same energy into hunting for business that we do in hunting for game, and I am convinced that we will bring down fuller bags than we have in many a moon. At any rate, now is the time to go after it, and we hope to see evidences of increased activity all over the country.—*Trade News.*

## BROMIDE PRINTING

[In response to an unusual number of inquiries about bromide paper for contact prints and enlargements, we are reprinting below what is the best monograph on the subject that has appeared in recent years. It is from the pen of F. J. Mortimer, F.R.P.S., and is taken from the *Year Book of Photography*, 1906–07.]

The great number of excellent brands of paper now on the market makes any remarks on the preparation of bromide paper less important than in the case of plain salted and gum-bichromate papers. Bromide paper is produced commercially more evenly and better coated and cheaper than could be prepared at home on a small scale, and although the emulsions employed by various makers undoubtedly differ in detail, the difference is so slight that all makes can be said to give practically the same comparative results. Degrees of rapidity, variety in surface and thickness are, of course, peculiar to certain bromide papers, but, speaking generally, the processes of exposure, development, and after treatment are the same for all.

The paper is purchasable with surfaces varying from the most glossy to that of rough drawing paper, and a range of colors rivalled only by carbon is obtainable at will. In addition, it

can be worked entirely by artificial light, which is a great point in its favor for the consideration of the busy worker during the short days of winter, when daylight printing is considerably curtailed.

The sensitive side of bromide paper is easily ascertained in the dark room by biting one corner of the sheet. The side on which the emulsion is, will stick to the teeth. If large sheets of paper are used, they will generally be found to curl slightly inward on the sensitive side.

The paper should be manipulated in a safe light until the print is developed and fixed, and for the preliminary operations with the paper the instructions accompanying each packet should be closely studied by the novice. The speed of bromide papers varies so considerably that the approximate time of exposure given by the makers should be followed until the characteristics of the latitude allowable in bromide printing is ascertained.

Every photographer who has successfully accomplished the development of a negative has a very good idea of the process of development of a bromide print if he is attempting it for the first time—that is, so far as dark room manipulation is concerned. Every photographer who attempts the making of bromide prints will have this knowledge, for if he has not previously produced a printable negative, he will not need to make a bromide print.

### *Safe Light for Working*

The best light for the development of bromide papers is that given by gas, oil, or incandescent electric light filtered through one thickness of canary fabric. If daylight is the illuminant, it should first be shielded with yellow glass, and then further covered with canary fabric. It is astonishing, however, the amount of bright yellow light that can be used with ordinary bromide paper without risk of fogging. Nevertheless, to satisfy the worker and to avoid the possibility of any future trouble, it is always well to test the light by placing a piece of the paper in use in a developing dish with some normal developer, covering half of it with a piece of card, and allowing it to stand in the direct rays of the yellow light for ten minutes or so. If the light is not safe, the half of the paper that remained uncovered will be found to be perceptibly developed.

### *Contact Printing*

This is carried out with bromide paper in a similar way to that adopted when using P.O.P. or any of the other printing processes, the only essential difference being that bromide papers are so sensitive to light that daylight printing is out of the question—the exposure necessary would be an extremely small fraction of a second, so small that it could not be properly measured. The stages of making a bromide print by contact are therefore as follows:

Filling the printing frame. (Done in the dark room.)

Exposing to gas or lamplight.

Developing the print. (Done in the dark room.)

Fixing the print. (Done in the dark room.)

Washing the print.

Drying and mounting the print.

### *Filling the Printing Frame*

Any printing frame can be used for bromide work. It does not matter whether it will open at the back or not for inspection of the print, because with bromide this cannot be done. With small negatives, the ordinary printing frames are quite suitable.

Only one of the needful size is wanted, as the exposure is very short, and it is not advisable to try and do more than one print at a time.

The frame is taken into the dark room, the negative put into it and dusted, and then, in the yellow light only, the packet of bromide paper is opened, and a sheet taken out and laid with its sensitive side in contact with the gelatine side of the negative. The back of the printing frame is put in and fastened, and the rest of the paper is wrapped up safely again. In handling bromide paper, care must always be taken not on any account to touch the sensitive surface with moist or dirty fingers, or it will most certainly be marked. If the paper is not of the required size, it should be cut with a pair of scissors, and not folded and torn, as this also may lead to marks upon it.

### *Exposure*

Printing should, so far as possible, always be carried on by the same light. If a paraffin lamp is used, then it should always be employed at its best, *i. e.*, with the wicks carefully trimmed and turned up as high as possible without smoking. If a gas jet is the light preferred, then it must in the same way be turned up as high as it will go without roaring. If the pressure is poor, the loss of light should be allowed for when exposing. By attention to these points it is possible, and indeed, quite easy, having once found out what exposure a negative requires, to make as many prints as may be wanted, either all at one time or at intervals of months apart, *without wasting a single piece of paper through under or over printing.* No other process whatever has this advantage—an economy which makes bromide printing one of the cheapest of photographic methods.

The printing frame is then placed at a definite distance from the light and the exposure made. The best distance for the frame is 18 inches from the light—and this distance should be measured, not guessed, and adhered to by the beginner. It is easy to make a mark on the table or wall at 18 inches from the source of light, or to tie a piece of string to the burner with a knot at 18 inches from the flame. With an average negative, the exposure at this distance from an ordinary burner should be from four to eight seconds; but one or two trials will have to be made. For this purpose, a piece of paper may be cut into three or four, different exposures given to each, and marked on them in pencil, and then all developed together. One such experiment should be quite sufficient to give the beginner at bromide printing a perfectly clear idea as to about the exposure required.

The advantage of always working with the same light, and at the same distance from it, is this: when once the exposure has been found out, the number of seconds may be written upon it in one corner in pencil, and when another print is wanted it can be made straight away, with the certainty that the exposure is correct. There is no real difficulty in determining the exposure any negative will want without this guide, but it is convenient to have it, and it costs no trouble.

### *Suiting the Paper to the Negative*

Now, although any bromide paper will, in capable hands, give a perfectly satisfactory print from any type of good negative, there is no doubt that it is as well to suit the speed of the paper to the character of the negative. That is to say, for negatives that are very harsh in contrast, and lacking in half tones, a rapid paper will give the most harmonious results. For a nega-

tive that is thin and flat, a paper that is considerably slower will give the best print. Tissue paper or pale yellow glass in front of the negative will also cause a marked difference in the rendering of the latter class of negative, but the greatest amount of control in compensating faulty density in the plate can be achieved by the regulation of the distance at which the printing frame containing the negative is held during exposure.

*Suiting the Exposure to the Negative*

Exposure is the one point in bromide paper technique where practice does not always agree with theory. It is laid down as a rule in most of the text books that "the intensity of illumination varies as the square of the distance from the source of light," which means that at twice the distance from the source of light the exposure is not twice, but twice two—that is, the square of two—so that at three times the distance the exposure will be nine times, or three times three—that is, the square of three—and so on.

In practical work, however, it will soon be discovered that a negative that requires, say, thirty seconds' exposure at 1 foot from the source of light to give a fully exposed print, will require more than sixteen times thirty seconds—that is, eight minutes—at 4 feet distance, although, according to this law of inverse squares, the results ought to be identical. This will be found to be the case particularly with negatives that have been developed with pyro, and have a pronounced yellow stain. Such negatives will require an exposure altogether out of proportion to their apparent density.

It will be found, also, that the scale of gradation is shortened when exposing thin or flat negatives at a considerable distance from the source of light—that is, much pluckier prints will be obtained and that softer prints are produced from harsh negatives by exposing closer to the light. Both these facts can be made of considerable value when dealing with negatives that will not give a good print on P.O.P. The negative that gives a good, straightforward print on P.O.P. is usually described as an "average negative" in the makers' instructions enclosed with bromide paper. The density of this "average negative" should be such that, if laid flat on some printed matter in bold type, such as an advertisement page of a magazine, the type can be seen through the densest part.

Control can also be exercised in the production of the print by employing different illuminants for exposing. A lamp or gas flame turned low will prove of great advantage in the case of thin negatives, while daylight may sometimes be used with advantage with extremely dense negatives, especially if they have also a strong yellow stain. In fact, in the case of the latter, it is almost a necessity to use either daylight or magnesium ribbon.

It should be borne in mind, however, that with large negatives uneven illumination will result if the printing frame is held too close to the source of light, the middle part of the picture or the part that is held opposite the light will receive more illumination than the corners. With a No. 5 Bray burner or incandescent electric light, a quarter-plate negative ought never to be held closer to the light than 1 foot. For a half plate, 2 feet; and anything over whole plate ought never to be closer than 3 feet. The application of the advice on equivalent exposures at varying distances from the light will be more thoroughly appreciated when it is required to give identical exposures to, say, a quarter plate and a whole plate negative of equal density when

the correct exposure for the quarter plate at 1 foot from the light is known.

It is advisable in bromide printing, if the most uniform results are required, to keep the variable factors as few as possible. As we have seen, thin negatives can be compensated for by using slower paper, by holding the negative further from the light when printing, by turning the light down, and by covering the plate with yellow glass or tissue paper. All of these methods are efficacious, and can be employed on occasion, but it will be found that the percentage of good results will be higher if only one is used and that thoroughly understood. The same thing applies to the treatment of over-dense negatives.

### *Vignettes*

A difficulty is frequently found in making satisfactory vignettes on bromide paper. This is usually due to the fact that the vignetting mask has been used too close to the negative, and that the light has not been sufficiently diffused before reaching the paper. The ordinary method employed for obtaining vignettes on P.O.P., platinotype, or carbon paper will not do with a process where the print is held so close to the source of light as with bromide. The result is certainly a vignette, but the line of demarcation is too abrupt. To produce properly graduated vignettes, the mask should be placed at least an inch from the face of the negative, and the opening in the mask made considerably smaller than with daylight vignetting. A piece of ground glass (ground side outward) should be placed in the printing frame before the negative is put in position. Over the front of the frame a sheet of thin tissue paper is fixed. This is separated from the ground glass by the thickness of the rebate of the frame. At a distance of an inch from this tissue paper is placed the mask, which may be a piece of cardboard larger than the front of the frame. By cutting V-pieces out of the corners, it can be bent down all round, and pinned to the sides of the frame, so that the aperture in the mask is kept at least an inch above the piece of tissue paper. This aperture, as mentioned before, should be quite small, although indicating roughly the shape it is desired to vignette, and it may also have serrated edges. With this vignetter the frame should never be closer to the light than 3 feet. The further off it is, the softer will the vignette be, and the longer the exposure. In the case of very weak negatives, or with a dense negative that is being exposed to daylight or magnesium light, another piece of tissue paper may be placed over the mask with advantage. In any case, the exposure will be considerably increased, and this should be ascertained by means of a test piece of paper.

### *Development*

The development of a bromide print calls for as much attention as the development of a negative, and, probably, a little more care in manipulation. With a correctly exposed plate, the action of a normal developer carried as far as it will go will give a good negative, but with a bromide print it must not be forgotten that a somewhat different result is aimed at. The quality of a negative is judged by transmitted light; the bromide print has to be seen by reflected light, and although the development may be apparently carried as far as possible, the density of the deposit has to be entirely different. The difference between the thickness of the emulsion on a dry plate and that on bromide paper allows this to be accomplished with the least amount of trouble, and although development can be pushed sufficiently far with a bro-

mide paper negative to secure considerable density by transmitted light, the deposit is still extremely weak, compared with that of a fully developed plate.

If the prints are small ones—say, up to and including 10 by 8 inches—the developer may be poured straight on to the paper without first wetting it in water. For larger prints than this, it is best to allow the print to soak for a minute in clean water, to pour this off and drain it for a moment, and then to flow the developer over immediately. While in the water the print should be examined to see that it is wetted all over, and that there are no air bubbles clinging to its surface. This preliminary wetting is designed to prevent air bubbles, which, if occurring during development, would produce an innumerable number of small white spots in the prints. With the larger sizes it is a good plan to rub the surface gently with a tuft of cotton as soon as the developer is applied; but with little prints, as a rule, it is best to see that they are evenly covered with developer, and not to meddle further with them.

The developer being poured on, the dish is rocked gently, so as to keep the liquid moving over the surface of the print. If the exposure has been correct, the image will make its appearance in a few seconds, the actual time depending upon the strength of the developer and its temperature. Over exposure makes the image appear much quicker than it should do; with under exposure the picture is very slow in appearing, and will lack strength. In these respects bromide paper resembles the ordinary plate used for making negatives, and anyone who has developed a few negatives will have no difficulty, when taking up bromide printing, in recognizing at a glance under or over exposure.

In the development of bromide paper for the purpose of obtaining good black and white prints, the chief qualifications to be desired are: purity of the whites, absence of stains, and a deposit of good color. The purity of the whites is assured—assuming freedom from light fog, by not forcing development, and by the judicious use of a small quantity of bromide of potassium in the developer, correct exposure being in every case a *sine qua non* if good black and white prints are desired. Stains are avoided by the observance of extreme cleanliness as regards the developing dishes, measures, etc., and in avoiding contamination with hypo.

### *Latitude in Exposure*

Bromide paper permits of enormous latitude in the length of exposure, the difference being compensated for by adjusting the developer to suit; but, and this point is not always grasped by bromide workers, the color of the image will alter immediately the correct exposure is departed from. Correct exposure and normal developer make the only possible combination for giving the best black and white prints. As soon as the exposure is increased, necessitating the addition of bromide of potassium in varying quantities to restrain development, and to steepen the scale of gradation, the color of the deposit assumes an appearance distinctly different from that given with the normal developer and correct exposure. Instead of a good black, unpleasant, rusty greens are produced. In negative work this is of no moment, but when the developed image is to be seen by reflected light, backed up with white paper, the bad color is most undesirable. For certain effects, however, this property of bromide paper to give tones varying from the rusty green mentioned to a pinky red or brown, by

alterations in the length of exposure and character of the developer, can be taken advantage of. There is no doubt that the image, being metallic silver, is as permanent as the black tones, and, probably, more permanent than many colors produced by various toning processes. We will deal with these variations of development later.

### *The Production of Black Tones*

For the production of black tones the exposure should always be made to suit the developer, and not the developer to suit the exposure. As the exposure that suits the normal developer for producing the best print is the correct one, this should be ascertained for each negative by trial slips of paper with progressive exposures before attempting to make any number of prints. If this correct exposure is noted, and the light, distance from light, and developer remain constant, the best print that the negative will give can always be repeated at a future time.

The time taken to fully develop can also be used as a constant factor. Modifications of development can, however, be occasionally employed to obtain certain desirable results. In the case of an extremely hard negative, for instance, that is, one containing much contrast due to under exposure and over development, the rule for correct exposure still holds good for black tones; but the most pleasing bromide print is to be obtained by increasing the exposure—doubling it if necessary, and developing in a normal developer considerably diluted with water. The result of this procedure is the production of a print that is much softer in character than would have been produced by correct exposure and developer of full strength; but, be it noted, no extra bromide of potassium is to be added to compensate for the increased exposure, or no advantage in the rendering of the scale of gradation is given, only an alteration in the color.

With the dilute developer and increased exposure, the color obtained is a pleasing gray instead of black, but the print has to be removed from the developer at an earlier stage. To get these soft, silvery grays instead of blacks, with a normal negative, it must always be borne in mind to increase the dilution of the developer in proportion to the increase of exposure, and to remove the print before it has acquired full strength in the shadows.

### *Correct Exposure*

It is often asked: "What is the correct exposure for bromide paper?" The correct exposure is that which permits of the development in the print of the faintest details contained in the densest parts of the negative, and no more.

If an exposure sufficient to allow the light to penetrate the densest part is given to a correctly exposed and developed negative, which is the type we assume is most frequently dealt with, the remaining portions of the negative will receive an exposure that will allow, with normal development, the correct amount of density to be secured in the print. If the gradations in the negative are imperfect, as in the case given above, increased exposure to allow the light to penetrate the dense parts of the negative is necessary, followed by short development in a slow acting (dilute) developer, so as not to clog the parts of the print that have been over exposed. In a dilute developer used under these conditions, the entire image will appear at about the same time, very thin and weak. The action of the developer is then to build up the deposit in the shadows which have re-

ceived the full exposure, but not to increase greatly the density of the high lights which have received only just sufficient. The print is, therefore, withdrawn as soon as it is seen that the shadows are commencing to clog, and the resultant image will be of a gray color.

The dilution of the developer without the addition of extra bromide of potassium can, of course, always be resorted to for correct exposure with a normal negative, and there are certain advantages in sometimes following this course; but in this case the action is allowed to continue until the image has gained full strength. One advantage of employing this mode of developing is that the image does not lose in intensity in the fixing bath, as is frequently the case after quick development in a strong developer; but gains a trifle in depth and richness in the shadows. More time is also allowed to estimate the progress of development, which is not always easy in the yellow light of the dark room.

In the case of over-exposed negatives that have been fully developed and are not only dense, but lacking in contrast, the addition of bromide of potassium to the normal developer is permissible without apparently affecting the final color of the print. The time of printing, however, should, if anything, err on the side of under-exposure. and this type of negative, and also one that is flat and not very dense, *i. e.*, over-exposed and under-developed, should be printed at a considerable distance from the source of light, and slow bromide paper should be used.

### *Developers*

Ferrous-oxalate was at one time the only developer advocated for bromide paper, and, indeed, was the only one really possible. Its claims for recognition in the production of prints of a fine color have always been very much in its favor; but, latterly, it has been almost entirely displaced by the alkaline developers, and it is of these we propose to treat.

### *Amidol*

Of the modern developers for bromide papers amidol probably stands highest in favor. This is due, not only to the rich black color obtainable with correct exposure, but also to the simplicity of the formula employed and the ease with which it is made up. No free alkali is necessary with this developer, and the only disadvantage in its use is that it loses its developing power entirely if kept for long as a stock solution. This developer, therefore, should be made up fresh for each batch of prints, and the most simple method of quickly preparing it is to keep a stock solution of sulphite of soda, and add the dry amidol as required.

A convenient form of keeping the sulphite of soda is in a 10 per cent. solution. Sufficient water is added to two ounces of sulphite to make twenty ounces, and twenty grains of potassium bromide added. To each ounce of this stock solution five grains of dry amidol are added just before use, and the developer is then diluted with an equal bulk of water. The amidol will dissolve readily, but care should be taken that no particles remain in the solution or black spots will be caused on the prints. Filtering the developer will obviate this.

If the stock solution of sulphite of soda is objected to, an alternative formula giving excellent results is:

| | |
|---|---|
| Water . . . . . | 20 ounces. |
| Sodium sulphite . . . | 650 grains. |
| Potassium bromide . . | 10 grains. |
| Amidol . . . . . | 50 grains. |

This should be mixed in the order given and used within twenty-four hours.

(To be continued.)

By S. H. Lifshey, Brooklyn, N. Y.

By S. H Lipshey, Brooklyn, N Y

By L. T. Powell, San Antonio, Texas

By L. T. Powell, San Antonio, Texas

By L. T. Powell, San Antonio, Texas

1. Maria Luise von Tassis

*Illustrating Sidney Allan's Article*

2. Children of Charles I
3. Franz Snyders and Wife

*Illustrating Sidney Allan's Article*

4 Kaspar Crayer

5. Queen Henrietta

6 Children of Charles I

7. Charles I

*Illustrating Sidney Allan's Article*

# MASTERS IN PORTRAITURE—ANTON VAN DYCK

BY SIDNEY ALLAN.

Of all the old masters, Anton Van Dyck scored most heavily as a portrait painter. Also he, like all the men of this period of versatility, tried himself in the various branches of his profession. He painted numerous religious and historical pictures on a large scale, but after all, he made his greatest hit, even among his contemporaries, as a portrait painter. It is astonishing with what facility this man painted. There are hundreds of portraits on record, and many of them are world-famous masterpieces, known to every lover of art. He painted the most influential people of his time and died as a rich man in 1641.

There is a peculiar dash, elegance, and dignity of pose to be found in all his pictures. His arrangements are *classical* in a way, or, in other words, they are so masterly that they apply to all times and conditions. It is difficult to improve upon them. And many of his attitudes and pictorial devices can be encountered in the portraits of today. Sargent and Boldini and many of the fashionable portrait painters of today have been close students of Van Dyck's work.

Something more brilliant, skilful, and finished than his "Maria Luisa de Tassis," Fig. 1, can hardly be imagined. And yet is so simple. There is nothing unusual in the attitude. Any woman might stand that way. And yet how well the figure fills the allotted space. Besides there is any amount of detail, characteristic of the costume of that period—so profuse that it would bewilder any photographer. He would be forced to either sacrifice the face or the details of the dress. Van Dyck mastered both. The totality of the effect is one of the principal charms of this picture. There is nothing to offend the eye. Our eyes glide from one point to the other with equal delight. This is largely due to the skilful division of black and white, the great trick of the old masters. They knew that the extremes of monochrome must balance each other, and they usually succeeded in carrying it out. The whole figure is as clearly drawn as the face, and this proves that detail will never detract from the face if the drawing in the lighter planes is surrounded by a sufficient amount of dark. The foreshortening of the hand holding the fan was a difficult theme. It can be done by a good draughtsman, but hardly ever by the lens. Photography might render a sleeve as perfect in drawing as the one in Fig. 1, but it cannot master foreshortenings in the same manner.

Figs. 2 and 6 are two excellent group portraits. Van Dyck apparently was fond of introducing dogs into his portraits. He made use of all sorts of animals and paraphernalia, but he always managed to reduce them to interesting shapes that help the composition rather than disturb it. The group in Fig. 6 would not be half so good without the symmetrical introduction of the dogs. The painter showed a decided preference for full face and three-quarter views. He rarely introduced a profile, no doubt for the simple reason that a profile is not conducive to animated expression. Van Dyck's faces all have a peculiar virility. They seen to be alive, as it were, and this effect is particularly due to the glow of the eyes, and the exquisite drawing of the nose and mouth. The painter was so sure of his skill as a physiognomist that he applied

no special device to hold the various elements of a group together. He was in no need of any special point of interest. He simply made his figures stare out of the picture. Many of the old masters did this; the simplest way is always the best. But he was not quite as matter-of-fact in this respect as Franz Hals. He introduced a lot of accessories, and the rich costumes helped him. In a group the V arrangement is always effective, and we see that the painter used it in both pictures. He also favored as a rule lines of a vertical tendency. We seldom encounter a decided curve like in the back of the big dog (Fig. 2) or sweeping curves and horizontal lines as in the paintings of Sargent, Whistler, Alexander, and Boldini.

Fig. 3, the portrait "of the painter Franz Snyder and his Wife," represents really two pictures in one. And yet they are connected not so much by the hands folded upon another (the worst feature of the picture), but by the dark triangular shapes of the busts and the wavy line of the curtain above. The vista into the open country lends a slightly decorative effect to the composition. The faces are wonderfully life-like, and constitute the chief merit of the work. The composition is indifferent, although it is better than most two-bust portraits made in photographic studios. It is a form of portraiture that does not lend itself particularly to contemporary costume. It necessitates the handling of conspicuous detail and the introduction of decided lighter planes, and unless manipulated with especial skill is best avoided.

Fig. 4 is a typical Van Dyck. It is the portrait of a fellow artist, Casper de Crayer, an intimate friend and pupil of his. And he could paint him just as he felt like painting him. Freedom of conception and handling always produces good results in protraiture. But chances for it are slim, particularly so in portrait photography. What is unusual in this portrait is the naturalness of facial expression and gesture. The head is tilted a trifle too much for ordinary portraiture. But no doubt it was characteristic of the sitter, and in such cases should be accentuated. Also, the hand is too animated. As soon as a hand ceases to be a mere accessory and is made, as it were, to live by itself, to assert itself as a vehicle of human speech, it detracts from the face. It even does in this instance, but it is well kept in tone. The picture is well lighted. The decided white of the linen collar, the shimmer of light in the face, the hand, and the background are managed with the skill of a Rembrandt.

To paint royalties was not considered a great privilege (from the artistic point of view) even in those days when kings and queens had pretty much everything their own way. The costume of state was too elaborate. There was too much shine and shimmer about it, and more than once Van Dyck complained about it. It is difficult to subdue obtrusive details into a harmonious composition. The famous portraits of King Charles I and Queen Henrietta are noteworthy examples of this style of work. They show that any subject can be handled artistically, and yet I wonder how we would judge them if they had been painted recently. Now we accept them as trustworthy documents. The illustrious personages of history live over again for us in these delineations. But we would surely find fault with some parts of the composition. There is too much detail, and there is no fine division of light and shade as in Fig. 1 to redeem it. Portraits like Fig. 4 and the man in Fig. 3 are nearer to us. They are simpler and more dignified despite the fact that they depict personages of an humbler station of life than those of Figs. 5 and 7.

## PROOFS AND POSITIONS

THE question of proofs is always of interest to the protraitist; the questions whether they are to be rough or finished, and how many are to be submitted, being matters for discussion when photographers meet. From enquiries we have recently made, it seems that under stress of competition, the expense of submitting a number of finished proofs is becoming a very serious matter. Not many years ago it was not usual to expose more than three or four plates upon an average sitter for cabinets, and to submit proofs from two, or at most three, of these. Now we find that photographers are taking seven or eight poses of the same class of customer and submitting proofs in proportion, the sitters regarding it as quite the usual practice and asking to see proofs from the remaining positions. This is undoubtedly a very undesirable state of things, and one for which we are afraid that photographers have only themselves to thank. Such a hit-or-miss method of working does not obtain in any other trade or profession, and why photographers should continue to endure it we cannot at all understand. No other trade or profession would tolerate it in any form. Imagine asking your tailor to make to your measure two or three suits on the chance that you might order one or more if they pleased you, or the builder to redecorate your house on the off-chance of you choosing to approve of and pay for it. We laugh at the letters from Gold Coast "princes" which we see printed in the papers from time to time, in which the simple native writes to a jeweller or an outfitter for free specimens of all his goods, yet the photographer is often faced with a request almost as naively impudent. We believe that we have already referred to the case of the photographer who took a dozen cabinet poses of the children of an old customer and was rewarded with an order for a dozen postcards. Here is an excellent opportunity for the Professional Photographers' Association to take some action which shall not only save the pockets of the members but raise their status in the artistic scale. When a sitter commissions a portrait painter or miniaturist to produce a picture, he does not expect to see half a dozen carefully finished sketches before he will decide which he likes, although the outlay is much greater than in the case of a dozen photographs. He has from the first to place himself in the hands of the artist, who starts with a definite idea in view, and the results are usually satisfactory. Now, to use an Americanism, it is "up to" the modern photographer to alter all this; some of the best workers on both sides of the Atlantic do not submit proofs, and their work is accordingly treated with respect. They spend their time in studying the sitter and not in exposing plates. Of course, they have their failures, but Millais had his failures, and even Reynolds had his failures from the patrons' point of view, but today these failures are valued as pictures and as portraits, when only the memory of the sitter remains, and the transient expression is forgotten.

At the recent P. P. A. Congress two well-known photographers joined issue on the subject of children's portraits, one advocating the most rapid exposures possible, so as to catch the momentary smile and dimple, and the other preferring to wait until a more placid and what may be called a more average expression could be obtained with a longer exposure. Good as the results might be by the first method, it was

found that parents found a more lasting satisfaction in pictures produced by the second, which was always a likeness. Excessive and injudicious retouching causes the rejection of many proofs, and the average busy portraitist who employs skilful retouchers, and expects them to earn their wages, is the greatest sufferer in this respect. We can instance one case where a firm doing a fair business which necessitated the constant employment of three retouchers reduced their re-sittings to less than one-half by reducing the retouching to the minimum, no change being made in lighting, posing, or other details. The retouchers were anxious to justify their existence, and in securing a "fine" finish took all the life out of the portrait even if they did not lose the drawing. The amateurs of a year or two back, who have become the professionals of today, have not this respect for the retoucher, and their work is the better for it. The retoucher is excellent in his way, but, like fire or water, he is a bad master, though a good servant.

A point on which some agreement might be arranged is the advisability of giving free re-sittings, when the portraits are in all respects satisfactory, except in the matter of some detail of dress, which the sitter or her friends consider unbecoming. We can instance a case in which, after considerable trouble, some good pictures of a baby were obtained, but upon seeing the proofs the mother asked for a re-sitting because the child looked overdressed. She thought that it would look nicer in a little smock, and the photographer had to look pleasant, lose half a dozen plates, three mounted proofs, and an hour's hard work in the studio.—*British Journal of Photography.*

## HOW TO MAKE ENLARGEMENTS

BY JOHN A. HODGES

ENLARGEMENTS may be made by daylight or by artificial light, and there are two methods of producing them, namely, by enlarging direct from the negative on to a sheet of bromide paper; or by first making a small transparency, and from that producing an enlarged negative upon a slow dry plate. The first is the method usually adopted by amateurs, probably because the necessary operations are fewer, and perhaps more simple. The second plan, however, possesses the advantage that the prints may be made by any process, be it carbon, platinum, or silver, and thus a great variety of effect obtained.

The first point, however, that the reader must decide, is whether he will work by artificial light or by daylight. Each may be said to possess certain advantages, and with many the question resolves itself into one of personal convenience. Artificial light is, or should be, fairly constant in intensity, and if adopted there will probably be less waste of material through miscalculation of exposure. But if the source of light employed be other than a mixed jet, or the arc-light, if, in fact, it be of low intensity, negatives of a somewhat delicate type will be required in order to produce enlargements of the highest excellence. If the negatives are dense and strong, illuminants of low intensity, like oil or gas, do not possess sufficient penetration to duly register the denser portions of the negative, and the enlargements so made are apt to be defi-

cient in half-tone, and hard. With well-graded negatives of suitable quality, however, most excellent enlargements may be produced by artificial light. When artificial light is used, work may be carried on at any time of day of night, in winter or summer. Those who adopt the daylight plan will, of course, be subjected to greater restrictions, at any rate, during the winter months, but amateurs who take a real interest in the work will do well to adopt the writer's plan, and provide themselves with apparatus for each method of working.

### *Enlarging by Daylight*

There are two ways of enlarging by daylight. The first involves the exclusion of all actinic light from a room except that which passes through the negative. The alternate method of working is to employ an ordinary enlarging camera. It is desirable, but not necessary, if the first plan be adopted, to secure the exclusive use of a room. One with a northerly aspect should be chosen, for if sunlight falls upon the window, shadows will at some period of the day fall upon the negative, and produce unevenly lighted enlargements. An upper room will be most suitable, and, if the light be a northern one, and there are no trees or buildings to obstruct the view, a reflector may be dispensed with. If external objects intervene, however, one must be employed. It should be fixed outside the window sill, at an angle of 45°, and should be capable of adjustment. Let it be *the full width of the window*, and *securely fixed* for obvious reasons. A plate glass mirror is effective, but expensive. A large drawing board painted dead white also answers well, but should not be left outside exposed to the weather.

Provision for excluding the light from the room is best secured by making a wooden frame large enough to fit closely against the window frame. Upon this a piece of stout calico should be tightly strained and secured with tacks. It should then be sized, and when dry will be as tight as a drum; it must then be covered with two thicknesses of stout brown paper pasted on. The frame is shown complete in Fig. 1.

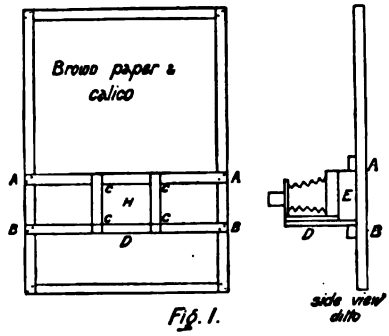

Fig. 1.

Now at *AA*, *BB*, screw two strips of wood, the distance apart must be regulated by the size of the negatives to be enlarged. The ordinary camera is intended to be used as the enlarging camera, and the distance from *C* to *C* should be just equal to the size of the back portion of the camera. On the lower rail, *BB*, screw a piece of 9 in. board to form a shelf or support, *D*, for the enlarging camera. Make a frame, *E*, of ½ in. wood 1 in. deep, the same size as the back of the camera, and screw to the shelf and top rail, *AA*. Now carefully cut away the brown paper and calico from the inside of this frame, at the part marked *H*, and paste strips of brown paper round it so as to prevent any light passing except through the opening *H*. A strip of felt should be tacked all round the large frame to prevent any light from creeping in between it and the window frame. A couple of turn buttons will keep it in position. A *firm* table should be placed against the window close up to the wall

to form a support for the enlarging easel. Now a little care must be taken in fitting up this portion of the apparatus, and it is better to have something more exact than the propped-up drawing board or printing frame, which is sometimes recommended. Get a carpenter to run out two V-shaped rails as shown in Fig. 2 at *BB*. They should

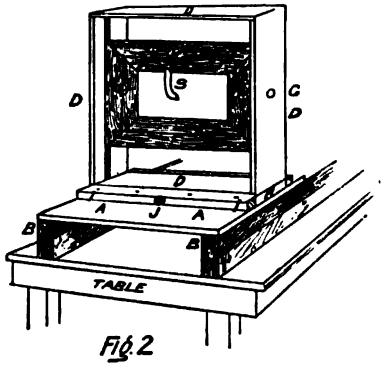

Fig. 2

be about the length of the table, and screwed down upon it. Procure a cheap drawing board about 15 x 12, and to the under side affix two pieces of wood with V-shaped grooves corresponding in angle to the rails. This forms the base of the easel, *AA*. Make a frame 22 x 20, or rather larger than the biggest enlargement that it is desired to produce. It should be constructed of ½ in. wood, and be 2 in. deep. It is shown in Fig. 2 at 1 *DDDD*. Now make, or get made, a set of carriers, *EE*, the largest of which should just fit into the frame. Narrow fillets of wood screwed each side will afford a rise and fall adjustment, and a thumb screw at *G* will fix the carrier in any desired position. To obtain the cross-movement screw the frame *DDDD* to a piece of board 5 in. wide, *HH*. Place this exactly in the centre of the base board, and screw fillets, *II*, of 1 in. wood to each side. This will afford a cross motion, and a thumb screw at *J* will fix the carrier frame when the necessary adjustment has been made.

In setting up an enlarging apparatus, whether it be for day or artificial light, it is absolutely essential to preserve the parallelism of its various parts, otherwise it will be impossible to produce sharp or evenly defined enlargements, and for this reason I have described somewhat fully the construction of a suitable easel. I may add that it will serve equally well for either daylight or artificial illumination, and I strongly advise the reader to construct, or have constructed, an easel on the lines I have laid down. With it either direct enlargements on paper can be produced, or plates may be used and enlarged negatives made. The easiest way of holding the paper during exposure is to procure two sheets of clear glass, patent plate is most suitable, sandwich the bromide paper between them, and secure with two strong bands of elastic. The complete apparatus in position for working is shown at Fig. 3.

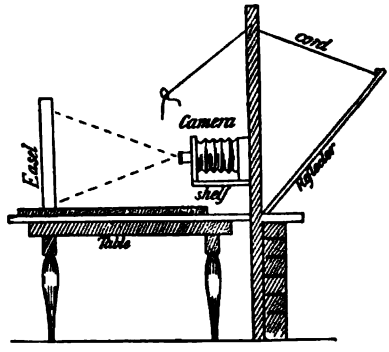

Fig. 3.

The second method of enlarging by daylight is by employing an ordinary enlarging camera. The same conditions as to lighting, etc., should be sought for, and the most convenient way of working will be to tilt the camera at such an angle as that the negative receives unobstructed illumi-

nation from the sky. A reflector in this case will not be necessary, but a piece of very finely ground glass should be placed about an inch in front of the negative in order to soften and diffuse the light. This method of working is shown in Fig. 4.

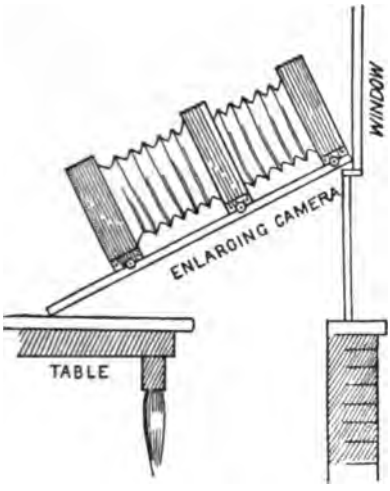


Fig. 4.

*Enlarging by Artificial Light*

Before describing the actual process of making an enlargement, it will be well to deal with the alternative method of working, namely, by artificial light, as the manipulations of the sensitive material used are the same in either case. Practically the most satisfactory way of working by the latter method is to use an enlarging lantern properly fitted with a condenser. The general principles of such an apparatus are identical with those which obtain in an ordinary optical lantern. Methods which dispense with the use of a condenser are more or less unsatisfactory, and should be avoided. In the space at the disposal of the writer it is not possible to give directions for the construction of an enlarging lantern, but those who may desire to make their own, will find full instructions and working drawings in *Practical Enlarging* (Tennant & Ward, New York).

Enlarging lanterns of excellent quality are obtainable commercially, but for the guidance of the uninitiated it may be useful to refer a little in detail to one or two important points with regard to their construction. The condenser will first claim attention. The ordinary pattern consists of two plano-convex lenses. This answers fairly well with the smaller sizes, but when the diameter of the condenser is large, a good deal of light may be lost. The diameter of the condenser is governed by the size of the negatives to be enlarged, it must be of sufficient size to include the longer sides of the plate within its circumference without cutting the corners. If it is much larger than this, an unnecessary loss of light will occur, because only that which passes through the negative can be utilized.

*The Illuminant*

The smaller and more intense the light, the nearer we approach to the ideal projection illuminant, and the better will be the definition of our enlargements. The arc light most nearly fulfils the desired conditions, and if it be available it should certainly be employed. Next in point of utility comes the limelight, preferably in the form of the mixed jet, and those who understand its manipulation are recommended to adopt it, but the majority of amateurs will probably find it more convenient to use either incandescent gaslight or an oil lamp. Parallel wick lamps should be avoided on account of the unequal illumination they produce, and if oil must be used a good circular wick burner will be found more suitable. Where house gas is available, the incandescent gaslight is, however, much to be preferred. The light is perhaps not

so powerful as that given by a really good parallel wick lamp, but it is far more actinic and penetrating. The writer has used this light with great satisfaction, and therefore has no hesitation in recommending it. Some workers have been troubled by the appearance of an image of the mantle on the screen, but this can usually be got rid of by a suitable adjustment of the lenses and the light, and in any case by the interposition of a piece of ground glass between condenser and negative.

### *The Choice of the Lens*

It is commonly stated that the lens with which the original negative was taken will serve equally well to enlarge it, and in the abstract the statement is perhaps not inaccurate. But assuming that a lens of a focus equal to about $1\frac{1}{4}$ times the base of the plate has been used, it will be found that better results, both in regard to definition and equality of illumination, will be obtained by substituting a lens of rather longer focus, for example, a half-plate lens for enlarging from quarter-plate negatives. This, although applying to both methods of working is particularly desirable when enlarging by artificial light, for an objective of small diameter and short focus cannot possibly pick up or receive the whole of the cone of rays proceeding from the condenser. In selecting a lens, one should be chosen which has a sufficiently large diameter to permit the apex of the cone of rays from the condenser to pass through. This point will, of course, vary with the degree of amplification, and in order to obtain the best results optically, the distance of the light from the condenser must be carefully adjusted in every case, and a clear, evenly lighted disc obtained before inserting the negative to be enlarged.

With regard to the type of lens, one of the rapid rectilinear form will answer well. A portrait lens is often used on account of the brilliancy of image, but although it answers well for enlarging portraits, the roundness of its field makes it less suitable for landscapes unless it is considerably stopped down. If the very finest results as regards definition are required, then one of the now numerous flat field lenses should be used. The writer can from practical experience speak well of the Ross, Goerz and the Cooke lens. The latter is perhaps preferable for working with artificial light on account of the larger diameter of the back lens. Wide angle lenses, on account of their small aperture and short focus, are not suitable for use with a condenser, both for the reasons given, and on account of the difficulty in focussing owing to the small amount of light transmitted. When daylight is used, however, there is less objection to their employment.

Before leaving this part of the subject it should be noted that in regard to preserving the parallelism of its parts the same care in erecting and fitting up the enlarging lantern must be observed, as was insisted upon in the description of the apparatus for daylight. It will be found convenient, therefore, to mount the lantern on a base similar to that upon which the easel rests, so that both may move on the same rails. The easel described for daylight enlarging will serve equally well for working by artificial light.

### *The Negative*

In general practice, one may find it necessary at times to enlarge from negatives of very dissimilar types, but there is no reason, when the negatives are to be produced with the special

object of subsequently making enlargements from them, why care should not be taken to make them of a suitable character. Thin, delicate negatives should be enlarged by artificial light; dense, strong ones by daylight. If the negatives are very strong it will be difficult to produce soft and well graded enlargements with a weak illuminant, the light not being sufficiently intense to properly penetrate the high lights.

A soft and clear negative, with good gradation, fully exposed, and neither exhibiting patches of clear glass shadow devoid of detail, nor of hard, impenetrable high light, will be found most suitable.

Fog should be avoided, as also should the yellow stain produced by pyro when improperly used. Not that the pyro developer is unsuitable, for if sufficient sulphite is used, and the quantity of pyro kept down, negatives of very beautiful quality for enlarging purposes may be produced. Great care should be taken to avoid bubbles, stains, scratches, or any kind of mechanical defects, as such, when enlarged, become painfully obtrusive, and spoil the effect of the best work. It will be found a good plan to bind the edge of the negative before enlarging it with a strip of lantern slide binding, so as to cover the clear glass rebate mark. If this be omitted the margins of the enlargement may become fogged by the lateral spreading action of the light. No hand work should be attempted on the original negative, for any such treatment will become painfully apparent in the enlargement.

If retouching be deemed necessary, it should in the case of a direct enlargement be executed upon the print itself, or upon the enlarged negative or preferably upon the enlarged transparency, when that method of reproduction has been adopted.

### *Direct Enlargements*

The following concise instructions for enlarging upon bromide paper will apply equally to the daylight or artificial light methods of working. In the first case the negative is placed in the dark slide of the camera, both shutters being drawn fully out. The camera is then put upon the shelf, close up against the opening in the shutter, as shown in Fig. 3, any light creeping in between shutter and camera being blocked out with the focussing cloth. If the enlarging lantern is used the negative will be placed in the carrier, just in the same way as a lantern slide, with the film side toward the enlarging lens. Now the first difficulty that will be experienced will be to get the enlarged image of the required size. It will be well to content ourselves at the outset with a moderate degree of enlargement, say from $3\frac{1}{4} \times 4\frac{1}{4}$ to $12 \times 10$, and when proficiency is acquired, larger sizes can be attempted. At first we shall probably not succeed in getting any image at all. In adjusting the various parts of the apparatus, we shall find the work easier if we remember that the nearer we place the lens to the negative, the further it will be necessary to move the easel from the lens, and the greater will be the enlargement.

Now it will be found much easier to focus the enlarged image by looking at it through a piece of finely ground glass, than by receiving it on a piece of card or paper, and the adoption of the easel plan of focussing previously described will enable this to be done. The ground surface of the glass (which must be of the same thickness as the piece behind which the paper is to be exposed) should be away from the lens and toward the person focussing, when it is placed in the carrier of the easel, it being retained in position with the spring, *S*, Fig. 2. Focussing must be

carefully performed, and is effected by sliding the easel to and fro upon the runners, and which should have been previously rubbed with blacklead.

Bromide paper is made in several varieties, such as smooth, rough, snow-enamel, cream crayon, etc., and is put up either in tubes, or packed flat. The latter is decidedly the more convenient, it being somewhat difficult to take the curl out of the paper that has been rolled. The choice of paper is a matter of taste; for landscape work, the rough paper or the cream crayon will perhaps be found most suitable. For finer work, and some classes of portraiture, the enamel will prove effective. Rough paper is better for strong, broad effects, smooth for more delicate work, and the rendering of fine detail. The coated side may be distinguished by its tendency to curl inward. The easiest way of exposing it is to procure two pieces of patent plate glass of the same thickness as the focussing glass, sandwich the sheet of paper between the two, and secure with strong elastic bands. This will hold it quite flat during exposure, and will not disturb the actinism of the lens or impair the definition of the enlargement.

### *Development*

This part of the work of producing an enlargement will only be lightly dealt with. The writer prefers the ferrous-oxalate developer for bromide enlargements to any of the more recently introduced developers, but as it requires more skill and judgment to employ it with complete success, beginners may find it better to use amidol or metol, either of which when properly used gives excellent results. Hydrokinone we do not recommend for this purpose, owing to its tendency to give rusty blacks in the event of over-exposure, or undue hardness if it has been too short. With amidol, a pure, delicate black is easily obtainable, and it is, moreover, a very simple developer to use. Our own plan is to employ a weak solution and give a full exposure, and by these means we find no difficulty in obtaining good gradation and pure blacks. The dish used for development must not be used for other developers or stains will probably occur. Although a quick appearance of the image is usually a characteristic of amidol, no trouble will be experienced when the developer is used in the way we advise, for the picture will be found to develop slowly and regularly, and gradually grow in strength. Quick development by this method would be an indication of over-exposure. A correctly exposed enlargement should take about ten minutes to develop. One stock solution only is necessary. It will keep indefinitely.

| | |
|---|---|
| Sulphite of soda . . . | 1 ounce. |
| Citric acid . . . . | 20 grains. |
| Distilled water . . . | 40 ounces. |
| Potassium bromide . . | 15 grains. |

To each ounce of the above, add, just before using, three grains of dry amidol. The exposure must be accurately timed. It is, however, impossible to give useful information on this head, unless such varying factors as the rapidity of the paper, the intensity of the light, the aperture of the lens, and the degree of enlargement are known. The best plan is to cut one of the sheets of bromide paper into twelve strips, and on these make several test exposures, carefully noting the duration of each. It is better (at any rate, for a beginner) not to vary the constituents or strength of the developer, but to increase or diminish the exposure until a good result in color and tonality is obtained. By entering full details relating to the production of a successful enlargement in a notebook, great exactitude in work-

ing will be obtained, and there need be little or no waste of material when additional enlargements have to be made from the same negatives at a future time.

A glass dish, though expensive, is very suitable for developing, for, being flat-bottomed, a minimum of solution can be used, and moreover, if the dish should be dirty, the fact is at once apparent. The exposed paper should be soaked in water for a few minutes until uniformly wetted, and any air-bells removed with a camel-hair brush. The water is then poured off, and the developer applied in an even wave, so that the whole of the paper is covered uniformly and quickly. The image will appear slowly, and gradually gain in detail. When all the detail has appeared it may still appear lacking in vigor and contrast, but this will come if sufficient time be allowed. *Development should not be stopped until the print is of the full strength required*, but it is not advisable to allow it to become much darker than it is desired to appear when finished, because there is very little loss of strength in the fixing bath.

If the image flashes out immediately upon the application of the developer, the paper has been over exposed. A strong dose (one or two drams) of 10 per cent. bromide added to the developer may help to save it, but the enlargement will probably look poor and flat and of bad color when finished. If the picture appears very slowly, and refuses to gain in strength, under exposure is the cause, and two or three drams of a 10 per cent. solution of sulphite of soda may improve matters, but as a rule the most satisfactory plan will be to make another exposure. With regard to the strength of the developer, that given is very suitable for negatives of normal density, but some papers may require a little more amidol, the appearance of the finished enlargements will guide the reader in regulating the quantity to suit the particular paper with which he may be working. The enlargement should be washed in plenty of running water from the tap to arrest development, and then fixed in:

| | |
|---|---|
| Hyposulphite of soda . | 4 ounces. |
| Water . . . . . | 20 ounces. |

A quarter of an hour should be allowed for fixation, but it is better to use two baths, giving ten minutes in each. After washing in running water for a couple of hours, they may be hung up by one corner to dry, or pinned down to a blotting board.

Enlargements produced in the manner described should be of a pure engraving black color, and if they are mounted upon *pure* boards with *freshly* made starch, they should prove permanent. Enlargements are frequently toned to various shades of brown and red, generally by the employment of the uranium toning bath. Although the colors so obtained are often very artistic and pleasing, no reliance can be placed upon the permanence of an enlargement so treated, and the writer strongly recommends that when warm colored prints are desired, an enlarged negative should be made, and prints made therefrom in carbon, silver, or sepia platinum.

### *Enlarged Negatives*

The production of an enlarged negative presents no difficulty that need deter any careful worker from attempting the work. No additional apparatus to that already described will be required, and either day or artificial light may be employed. In the first place, a transparency must be made from the small original negative. It may be made either by contact or in the camera, preferably the latter, as then the acme of sharpness will be obtained.

If, however, the reader is acquainted with the carbon process, he cannot do better than make a carbon transparency, for such are specially adapted for the production of enlarged negatives. Many, however, will prefer to make the transparency on a bromide plate, and as this is the part of the process which requires the greatest amount of care, and as *in fact the quality of the enlarged negative will entirely depend upon the character of the small transparency*, it is necessary to deal with the matter somewhat in detail. Preconceived ideas of quality based upon the appearance of a good lantern slide must be put aside, for that is not at all what is required. What is wanted is a transparency in which every possible detail existing in the negative has been reproduced, and which in comparison with a lantern slide would look rather flat and over exposed. Every possible precaution should be taken to avoid granularity or coarseness of image, therefore a slow plate is almost essential; plates coated with lantern slide emulsion are now obtainable, and will be found very suitable. A full exposure should be given, and a weak and well restrained developer employed. These conditions tend to the production of the qualities desired. Warm colored transparencies so produced generally have a finer grain than those developed to a black or colder color, but unless the colors produced are fairly uniform, considerable variation in exposure when making the enlarged negatives will be necessary, and for this reason it would perhaps be better for the beginner to aim at the production of good black transparencies possessing the qualities indicated.

The small transparency, having been fixed, washed, and dried, should be edged with black paper to prevent any subsequent fogging of the plate, by the lateral spreading action of the light. It is then placed in the enlarging apparatus, just as in the case of a negative, and carefully focussed. This operation must be very carefully performed. The writer uses a thin and very sharp negative of an architectural subject to focus with. afterward substituting the transparency which is to be enlarged. Landscape subjects, consisting chiefly of foliage, are seldom critically sharp, and it is then difficult to secure a sharply focussed enlargement. The remainder of the operation is extremely simple. In the place of the ground glass screen (which in this case should have its rough or ground side nearest to the enlarging lens) a slow dry plate is placed, backed with a piece of cardboard covered with black velvet to avoid reflections and possible fog. The exposure should be full, and a weak developer employed. Trial exposures may be made on quarter plates, coated from the same batch of emulsion, which the manufacturers will willingly supply, if the purpose for which they are required is made known. Pyro will be found the most suitable developer, but it should contain a full proportion of sulphite, and not be too strong. Exposure and development should be so adjusted that by the time every possible detail has been developed up, the plate will not have become unduly dense. If expense has to be considered, a piece of slow, smooth bromide paper may be substituted for the large dry plate, in which case the result will be an enlarged paper negative. For large sizes, 12 x 15 and beyond, the latter is a very economical method of working, and the negatives will be found to yield most artistic prints, and if the operations have been carried out as described, and the prescribed conditions carefully observed, the grain of the paper will not show obtrusively or unpleasantly in the prints.

An alternative method of working, and one which admits of a large amount

of control over the ultimate result, is to make in the first place a large transparency of the full size that the enlarged negative is desired to be. All the precautions upon which stress has been laid should be observed in regard to the choice of plate, developer, etc.; but in this case the enlarged transparency may be given a little more vigor and sparkle than would be desirable if the other method of reproduction were adopted, though in this the reader must be guided by the particular effect which he may be seeking to produce in his prints. For this purpose, pyro will be found to be the most suitable developer, in that it permits of a large amount of control. From the large transparency a negative is produced by contact printing either upon a plate, or upon a piece of bromide paper.

The great advantages of the latter mode of working are the facilities which are afforded for retouching or working upon the large transparency. Negative retouching is always a difficult operation to an amateur, for he cannot see the effect of his work until he has made a print; whereas, in retouching a transparency the effect produced by each stroke of the pencil or brush is at once apparent. In the space at disposal it is not possible to describe the various ways in which improvements can be effected. First, there are the chemical aids of local intensification or reduction. Then much may be done by the judicious use of a pencil, but the part to be retouched must first be lightly rubbed with a little retouching medium in order to make the pencil bite. In extreme cases, the back of the negative may be covered with tissue paper upon which a stump and chalk may be used *at discretion*.

The novice must not be disappointed with the appearance of his enlarged negative when it is finished, nor should he form an adverse opinion of its printing qualities until he had made a print from it. Confessedly an enlarged negative generally presents a different appearance to one that has been taken direct, and may even seem to lack some of those qualities that are commonly regarded as essential to perfection, but if the final result, the picture, comes up to our expectations, we may surely dismiss any lingering doubts as to whether the enlarged negative conforms to certain preconceived notions of technique, and it should be enough for us to know (and the fact is incontrovertible) that some of the finest and most artistic photographs ever shown owe their existence to this method of production.

## THE PENNSYLVANIA CONVENTION

THE Pennsylvania Convention held during the week of March 6 was a very successful convention in every respect. A larger attendance would have been more encouraging, but there seems to be a fixed ratio between photographers who attend and those who stay away, that is difficult to overcome. Unfortunately it is the men who most need the help of a convention that stay away.

A well arranged program was carried through in good order. The picture exhibit was fine and included the work of William Crooke, of Edinburg, and H. Walter Barnett, of London. A collection of German prints was loaned by Frank V. Chambers of *The Bulletin of Photography*, and added to the general interest. The demonstrations in William Rau's studio went off well, and were closely followed by interested

audiences. The banquet, preceeded by an entertainment, was a great success, and an enjoyable and fitting close to the best convention this society has yet held.

President Rau opened the proceedings by introducing Leslie W. Miller, the principal of the School of Industrial Art in Philadelphia, a man of culture and thoroughly versed in all matters relating to art and its application to industrial and technical pursuits.

### *Director Miller's Address*

Mr. Miller spoke of the Genesis of Photography, of its phenomenal, rapid progress and of the early entry of its aims as a means of translation of artistic feeling in its productions. How photography had gradually and continuously advanced, creating new fields for its exercise and growing more and more as a peculiar means of graphic expression of taste and feeling along the lines of art; how it had not only become the handmaid of science in every province, but also how it had ever striven to mount higher and higher in the advancement of asthetic conceptions.

He pointed out its recent phenomenal growth in the direction of art, and expressed his admiration for the superb results accomplished in this country and in Europe, dwelling to some length upon the individual excellency of the exhibits in the collection of Crooke's pictures and in the series of German photographs.

He showed how this excellency of composition and tonality had been secured by these photographic artists by their close and careful study of the works of eminent painters; how in especial they had obtained these delightful features in their works by consciencious and legitimate methods of illumination, and judicious subordination of detail and emphasis or elimination of parts to increase the general effect, and bring all the elements of the picture to harmonious relation. Here Mr. Miller took occasion to refer to those illegitimate methods of faking in photographic art by which the photographer endeavored to produce an effect not primarily obtained by skilful illumination, but by manipulatory tricks in obliteration of detail, and reducing the picture to a scale of tone inconsistent with the motive which prompted its conception, particularly showing that in a truly artistic work by photography, or by the brush, it is not in the destruction of minutiæ that its value is estimated, but in the repression or subordination of the detail by keeping it from being too pronounced and positive in its self assertion.

Mr. Miller deplored the error which some artistic aspirants in photography had fallen into in their futile attempts to imitate rough brush markings and charcoal strokes, which palpably fall very far short of producing any artistic effect. Neither smoothness nor coarseness of execution are the motives aimed for by any great artist, whose primary desire is the conveyance of the peculiar emotion he experiences in contemplation of natural objects. The production of a picture is not the mere mirroring of Nature in a glass, but the presentation of Nature as modified and exalted by the individual factor of the painter's mentality. Neither in composition of line and mass, nor in the rendition of color effects, does the painter absolutely reproduce Nature; such a presentation would not affect our esthetic perceptions. We must see Nature modified by art to feel the effect which the scene or object intended to produce. Mr. Miller referred both to Velasquez and Titian as

two exponents of the different individual methods employed by a great painter in expression, speaking in especial of his personal delight in contemplating a portrait of Titian in one of the English galleries where the execution was of the smoothest character, without the slightest indication of the marks of the brush.

In dwelling upon the differences between color as presented in Nature and as represented by the painter, Mr. Miller showed how the painter never is a naturalist in delineation of color, but how of necessity he is compelled to get the desired effect to falsify, so to say, the actual colors of the object or landscape, and this observation led him to touch upon the subject of color to some considerable extent, and to remark particularly about the recent so-called color photography in its inadequacy, by reason of its too faithful translation of the actual tints of Nature unmodified by association and contrast, to give in its reproduction that esthetic pleasure which a well-conceived and modified work of color produces. Mr. Miller concluded his most interesting talk by predicting a great future for photographic art, and looks forward to new and even more startling discoveries than what had been accomplished, remarkable as they have been.

The remarks of Mr. Miller were listened to with great interest and received hearty applause.

### *President Rau's Speech*

Your President and officers of this Society have planned to make this the most successful and impressive convention in the history of the organization, and we welcome you. Last year it was decided to change the meeting time to March, 1911, two months earlier than usual, and the members have responded nobly, and we have been favored with the presence of many eminent men, who will demonstrate and talk to us on interesting subjects.

The progress and growth of the Professional Photographers' Society of Pennsylvania has been most gratifying, and we are now holding our fourth annual convention under the new constitution and under the most favorable conditions. We have a fine display of pictures by the members, and foreign exhibits by William Crooke, of Edinburg; H. Walter Barnett, of London, and a German exhibit loaned by Frank V. Chambers, and are promised a good attendance. New sections are formed and forming, and more will soon be added, much of which is due to our very active secretary, Mr. Cooper, who has traveled, written, and talked much.

Philadelphia Section No. 1 held an invitation meeting, to which all photographers in this district were invited. The results were most satisfactory, as many new members were added, and a good impression was made on all the guests. This should be an example to other sections to increase their membership, as we *must grow*. Some of the sections are sending out most attractive notices of and invitations to their meetings, and should interchange these with other sections, and improve wherever necessary.

The "circulating salon" has given a great deal of pleasure and instruction and should certainly be improved and continued. There is no doubt that all progress to the business man and the laboring man is due to organization, and it pays to get together and see each other and exchange ideas, as you can only *know* a man by seeing him. The late King Edward made personal visits to Germany and France to look after the diplomatic matters which had caused

strained relations between the countries almost to the breaking point, and adjusted them peacefully.

Our finances are in good condition, and we can meet our obligations promptly.

A splendid program is arranged, and we should all go home after this convention wiser and happier than before. The Executive Board, the committees, and their friends, have worked hard and deserve great credit.

I think it would be interesting to the members to know a few historical and important facts about Philadelphia. (Here followed a list of important events in history.)

There is unassailable evidence of the priority of Philadelphia in the photographic field.

Joseph Saxton, of Philadelphia, made the first heliograph in America, October, 1839. This was but one month after America had received intelligence of the new and wonderful art of sun drawing, and he may be considered the first to apply photography to the production of mechanical printing.

Robert Cornelius, of Philadelphia, took the first portrait of the human face by Daguerre's process, even before Daguerre himself, who had only taken inanimate objects.

Dr. Paul Beck Goddard was the first to employ bromine as a sensitizer, thereby increasing the rapidity of the plate. This discovery was made in 1839. By this accelerator he was enabled to make an instantaneous picture.

William Mason, of Philadelphia, in 1839, employed artificial light and obtained the first picture by that means.

Robert Cornelius opened the first studio in America, in February, 1840.

Joseph Saxton, of Philadelphia, in 1841, produced the first photo-mechanical reproduction for use with printers' ink, which combined in its production the daguerreotype, electrotype, and a mechanical process.

About 1847, Francis Schrieber made the first albumen paper in the world, and first negatives ever made on glass or paper in America at Philadelphia.

M. Carey Lea, one of the most scientific photographers in the world, was a Philadelphian.

I want to say that our exhibition of pictures represents quality more than quantity, and they should be studied to be appreciated. I wrote a letter to each of the presidents of twenty or more state societies, asking for suggestions in reference to convention matters, what they had to offer; only a few replied, and stated that the most important matter to study was "How to get the almighty dollar." Possibly Lincoln's advice might make you happy and give you a good lift. He said, "Don't worry, eat three square meals a day, say your prayers, be courteous to your creditors, keep your digestion good, exercise, and go slow and easy." I am sure that better work and promises kept will improve any man's standing in the business, and make it possible to get better prices. Never have photographers received such high prices as now, and ranked with artists, as some of them do. I would advise you to study the work of the "Pictorial Photographers," "Artists of the Photo Secession," as there are some masters among them, whose pictures are a delight.

I hope that every member will join the Photographers' Copyright League of America. Write to B. J. Falk or Joe Byron, of New York, for full particulars. They can supply you, as a member, with copies of the best legal contracts to make with publishers and others who want to use your pictures. The new copyright law is much simpler than the old, but does not award the owner the high damages of the old law.

## REPORTS OF SECTIONS

### *Philadelphia Section No. 1—Mr. Blaul*

Our report is somewhat similar to that of last year. We have forty-seven members, three of whom, we are glad to say, are ladies. During the year we have had nine regular meetings, two outings, and one "set out," as Mr. Rau would say. We have had ten applications. Our meetings are very interesting. The boys show up at every meeting if they possibly can. The meetings are held in the different studios once a month, the third Wednesday. The regular business is first, then a quiz, in which one of the members asks pertinent questions relative to photography, and calls on one of the members to answer, and they are very glad, indeed, to answer. After this we have a criticism of one or two pictures, and the member receiving the highest votes is called on to criticize. Then comes the social hour, and "eats."

### *Pittsburg Section No. 2—Mr. Brown*

I will give you a brief statement of what we have done. We have had ten meetings. The meetings have been very well attended considering the distance some of the members are compelled to come. We have an exhibition of pictures. Lately we have selected special kinds of pictures, as pictures of children, and criticize them. One of our recent meetings was held at one of the member's studios, in the suburbs of Pittsburg. We have six new members, and feel encouraged, but hope to accomplish more.

### *Harrisburg Section No. 3*

The year just closing has been voted a success by the Harrisburg Section No. 3 of the P.P.S. of Pa. We have the pleasure, gentlemen, of announcing that we have doubled our membership in the last six months. We have an average attendance of 80 per cent. of the members present at the meetings, some of the boys being compelled to travel fifty to sixty miles to attend.

This winter we held an afternoon demonstration at each meeting, after which the boys usually took dinner together at a nearby hotel; the evening being devoted to the business meeting. We had with us at one meeting our state secretary, Cooper. He helped to boom the membership. Our president, Mr. Rau, gave a very interesting talk at another meeting. Our champion prize winner, Vice President Bill Ellis, at our November meeting, gave us a home portrait demonstration.

At our meeting in January, another one of our Bills (Towles) gave us a demonstration of the proper use of drapery.

Gentlemen, these are only a few of the good things that we have received during the last winter. Our treasury is in a healthy condition, and we are looking forward to the three B's this coming year—Biggest, Brightest, and Best ever held.

### *Anthracite Section No. 4*

I have made no detailed statement of what we have been doing the last year. We meet regularly once a month. Criticising pictures has been one of the main features this past season. We have had Mr. Rau and Mr. Cooper, and some of the other Philadelphia boys with us. Our membership has been increased to some extent, but not as we would have liked to have it. The last meeting was one of the most interesting meetings we have had. Each member voluntarily told us how he felt in improving the status of our occupation.

*Westmoreland Section No. 5—No report.*

*Washington Section No. 6—Mr. Harris*

We are having the same difficulty as the Anthracite Section in regard to the By-Laws. We have found that a few of our members have sold their studios and have gone to work for others—at least three, this past year.

*Lehigh Valley Section No. 7*

Sixteen members. Application accepted. Mr. McCaa, chairman of the Lehigh Valley: We held a meeting on January 10, this year. There were sixteen members present. We have not yet much of a report to make, as we have only had one meeting before the State Convention. You will hear from us later.

*Northwestern Erie Section No. 8*

Twenty-five members. Application accepted. Mr. Lowe: Being only an infant, yet we feel that we have accomplished some little. When I first started in Erie, there were not two photographers that would walk down the street together. After a time we finally conceived an idea of forming, merely socially, not mentioning the business end at all. Finally, we got every photographer in Erie together. One of the meetings was held at Cambridge Springs, and invitations were sent out to all the photographers in the vicinity with the view of forming sections. We have now twenty-five members. Just recently, when we had our meeting in Erie, Mr. Cooper was with us. Although we are just a young section, we ask you to keep your eye on us.

THE NEW BOARD

President, Edwin H. Cooper, of Chester.

First Vice President, Charles Fritsch, of Pittston.

Second Vice President, E. W. Brown, of Beaver.

Secretary, Louis Kubey, of Philadelphia.

Treasurer, W. I. Goldman, of Reading.

Committee on Resolutions reported as follows:

*Resolved*, That our delegate to the Congress of Photography propose to that body that an imaginary line be drawn north and south in the United States, dividing the country; that each alternate year our convention be held east and west of that line. The line to be the Mississippi River from the Gulf to the Ohio River, east on the Ohio River to the eastern boundary of the River to the eastern boundary line of the state of Indiana, north to the northern boundary line of Ohio to the Great Lakes.

## PHOTOGRAPHING OLD PEOPLE

Of course it is axiomatic that the first office of a picture (a portrait) is to be a likeness, and however much this self-evident truth has been lost sight of in these later years, since the desolation of retouching has darkened the land, and photographers have lent their efforts to catering to the vanity of females of both sexes, the cardinal reason for making portraits at all remains as in the beginning.

All persons, of whatever age or con-

dition, are interesting (if they are clean) to one who has a talent for likeness making, but to me old people have a peculiar interest as subjects. Babies and very young children afford a kind of whimsical grotesqueness in their efforts to get the hang of life; the young man and woman in their gathering strength and charm furnish fine studies; the middle aged, who have developed all their powers, and are in the midst of the battle of life, call for serious and thoughtful work; but the old, who are emerging from the thick of the fray, bearing upon their faces and in their air, a record of the experiences that have come to them, set against a background of racial lineaments, form a class at once distinctive and unique, and are perhaps the most difficult to manage. In the first place, the old person often feels that the fact that he is old demands an apology, or at least an explanation, to account for the folly he commits in having a picture made. He seems to feel that there is no beauty but the beauty of youth, and that the furrows of his cheek and the wrinkles of his brow are something for his younger family friends to be ashamed of. Hence it is very difficult, if you would please your sitter, to exercise that temperance in retouching that a successful portrait calls for. I remember an old lady who came to me and placed quite an order. She impressed me as a most beautiful old lady: her hair was still abundant and evenly turned to white, her face was a perfect network of soft lines (you could hardly call them wrinkles), and her expression was one of great refinement and sweetness. I secured one negative that I thought was ideal, and her pictures were made from it. It was retouched little, if any; it was so soft and delicate that a retoucher's work would seem like a bull in a china shop. Some time after I saw her and found that her photographs were but indifferently satisfactory. She told me that she had a sister whose face bore more of the marks of age than her own, and that her pictures (by another photographer) did not show a trace of them. There you are with the average old person, especially if it is a woman; but there is a compensation in the fact that a good, faithful likeness is sure to please the friends of the sitter, and, moreover, a sense of duty performed in sending down to their posterity a true portrait of their relative in his or her old age. Such pictures are very interesting to the family in later years. But there are some things to be observed if we are to secure a good portrait. In the first place, they should never be disposed of hurriedly. They come a little sensitive about their old faces, and somewhat geared up at the thought of sitting. Take time to have some conversation with them, and establish, if possible, a feeling of familiarity and sympathy; make them feel that you are interested to get something that is really good, and that it is not wholly a matter of business with you. Characteristic attitudes count for much more in the way of likeness than with younger people, and for that reason it seems to me that a half-length or full figure is better than a bust in many cases. Then comes the question of accessories, which should be something not out of line with the apparent condition in life of the sitter. Sumptuous furniture and stately interiors are a mockery and an absurdity when your subject is a plainly dressed old person of the humbler class. A chair that suggests the comfort that old age requires often adds much, but, what is better still, is the chair they are accustomed to sit in at home. I have sometimes been asked if their home chair might not be sent in for the purpose, and the idea is a good one. The

nearer we can get to chimney-corner effects, the better. For that reason, sittings made at their homes, where some familiar objects can be included, are of especial value. True, we may not be able to achieve as fine effects in lighting, or find our accessories to give the balance of light and shade we desire or to please us entirely in the matter of composition, but the home sentiment will outweigh them all. In not many cases, perhaps, will these home sittings be had, for various reasons, particularly the increased expense, and we must fall back upon such things as we have under our skylight. When we find that we have nothing that accords with the personality of the sitter, it is better to employ a perfectly plain ground that will give proper relief to the subject, and, at all events, not detract from the likeness by dragging in elements that are foreign.

I am convinced, too, as I have explained before, that in the case of old persons, a prolonged exposure is better than a short one, for the reason that the tense muscles with which the sitting commenced will relax, and several expressions, perhaps, will flit over the face before its close, the blending of which will almost always secure a better expression than a short exposure.—*G. L. Hurd.*

## KODAK ADVERTISING CONTEST FOR 1911

So successful have the previous kodak advertising competitions proved in bringing out good latent photographic advertising pictures that another contest is announced for 1911, with $2500 cash prizes offered. Lest any competitors in the last two competitions should be discouraged by the repeated successes of some of the prize winners, a new class has been provided, to be known as the Grand Prize class, in which former prize winners will compete for a $500 prize. They will not, however, be allowed to compete in Class A.

So few photographers realize the big part that the photograph plays in present day advertising. A good idea, photographically expressed, will always sell well to the advertiser. In this competition, in which the Eastman Kodak Co. offers big money prizes, it is not sample prints, showing the good work done by a kodak, but the illustration of the many uses of a kodak that is sought. You do not necessarily have to be a prize winner to get good money out of this competition. Many prints, while failing to receive the judges' favorable decision, are bought for good prices by the Eastman Company, because they contain a good advertising point.

Read carefully the rules and then try and get an idea worked out. Do not wait until a week before the closing date but start now.

### Terms

1. Each picture is to contain a figure or figures, and is to be suitable for use as an illustration in advertising the Kodak or the Kodak system of amateur photography.

2. Each print in the Grand Prize Class and Class "A" must be from a negative 5 x 7, or larger. Each print in Class "B" must be from a negative 4 x 5 or $3\frac{1}{4}$ x $5\frac{1}{2}$, or larger.

3. *Prints only* are to be sent for competition—not negatives.

4 Prints must be mounted but not framed. (Mounts should show about one inch margin.)

5. No competitor will be awarded more than one prize. (This does not prevent a competitor from entering as many pictures as he may desire.)

6. Due and reasonable care will be taken of all non-winning prints, and, barring loss or accident, they will be returned to their owners at our expense, but we assume no responsibility of loss or damage.

7. The negatives from which all prize-winning prints are made are to become the property of the Eastman Kodak Company, and are to be received by it in good order before payment of prize money is made.

8. Contestants who are awarded prizes must also furnish to us the written consent of the subject (in case of a minor, the written consent of a parent or guardian) to the use of the picture in such manner as we may see fit in our advertising, as per the following form:

.....

*For value received, I hereby consent that the pictures taken of me by ....., proofs of which are hereto attached, or any reproduction of the same, may be used by the Eastman Kodak Company or any of its associate companies for the purpose of illustration, advertising, or publication in any manner.*

.....

Below we print the form to be used in case the subject used for the picture is not of age.

(Use This Form for a Minor).

*I hereby affirm that I am the parent/guardian of ..... ....., and for value received, I hereby consent that the pictures taken of him/her by ..... proofs of which are hereto attached, or any reproduction of the same, may be used by the Eastman Kodak Company or any of its associate companies for the purpose of illustration, advertising, or publication in any manner.*

.....

NOTE.—Blank forms will be furnished on application.

* Entries from Canada should be sent to Canadian Kodak Co., Toronto, Canada.

* All entries should be addressed to
EASTMAN KODAK COMPANY,
*Advertising Department,*
*Rochester, N. Y.*

10. In sending pictures, mark the *package* plainly, "Kodak Advertising Contest," and in the lower left-hand corner write your own name and address. Then write us a letter as follows:

*I am sending you today by Express/Mail charges prepaid ..... prints. Please enter in your Kodak Advertising Competition, Class .....*

*Yours truly,*

*Name.....*

*Address.....*

11. The name and address of the competitor must be legibly written on a paper and enclosed in a sealed envelope in the same package in which the prints are forwarded. There is to be no writing on prints or mounts.

12. We will promptly acknowledge the receipt of pictures, and when awards are made, will send each competitor a list of prize-winners.

13. Only recognized professional photographers conducting a studio will be allowed to compete in Class "A." Class "B" is open to all photographers not in above classification.

14. This contest will close October 1, 1911, at Rochester, N. Y., and September 20 at Toronto, Canada.

## THE PRIZES

### GRAND PRIZE CLASS

Open only to professional photographers who have won prizes in professional class in previous Kodak Advertising Contests. Negatives, 5 x 7 or larger.

GRAND PRIZE, $500.00

CLASS A

PROFESSIONAL PHOTOGRAPHERS ONLY.*

* Winners in 1907 and in Class A, 1908, 1909, and 1910, are not eligible.

Negatives, 5 x 7 or larger.

| | |
|---|---|
| First Prize | $500.00 |
| Second Prize | 400.00 |
| Third Prize | 250.00 |
| Fourth Prize | 150.00 |
| Fifth Prize | 100.00 |

CLASS B

AMATEURS ONLY.

Negatives, 4 x 5 or 3¼ x 5½ or larger.

| | |
|---|---|
| First Prize | $300.00 |
| Second Prize | 150.00 |
| Third Prize | 75.00 |
| Fourth Prize | 50.00 |
| Fifth Prize | 25.00 |

SUGGESTIONS

First of all, it should be remembered that these prizes are not offered for the sake of obtaining sample prints or negatives made with our goods. *Merely pretty pictures, merely artistic pictures, will not be considered.* The pictures must in some way connect up with the Kodak idea—must show the pleasure that is to be derived from picture taking, or the simplicity of the Kodak system, or suggest the excellence of Kodak goods. Must, in short, help to sell Kodak goods, by *illustration* of some one of the many points in their favor.

The jury will be instructed to award the prizes to those contestants whose pictures, all things considered, are best adapted to use in Kodak (or Brownie Camera) advertising.

As reproductions of the pictures will often be in small sizes, too much detail should not be introduced.

Pictures for reproduction should be snappy—vigorous, for they lose much by the half-tone process.

Where apparatus is introduced, it must be up to date. If you haven't the goods, you can borrow.

It is highly probable that we shall want to secure some negatives aside from the prize-winners. In such cases, special arrangements will be made.

If you are interested, let us send you a copy of the Souvenir of 1910 contest, which gives an idea of the kinds of pictures that we consider valuable from an advertising standpoint.

THE JUDGES

The jury of award will consist of photographers and of advertising men who are fully competent to pass upon the work submitted. Full attention will be paid, therefore, to the artistic and technical merit of the work, as well as to its strength from an advertising standpoint. Announcement of the names of the judges will be made later.

EASTMAN KODAK COMPANY,
Rochester, N. Y.

## TRADE NOTES

BURKE & JAMES announce that, in order to better take care of their rapidly increasing business, they have re-incorporated under the title of Burke & James Incorporated, increasing their capital stock from $150,000 to $1,000,000. This is coincident with their removal to the new four story building at 240 to 252 Ontario St., Chicago, where they have a floor space of over 100,000 square feet, which provides ample room to take care of the rapidly increasing business.

THE NORTHERN PHOTO SUPPLY CO., of Minneapolis, Minn., advise that increasing business has compelled them to again enlarge their premises. They have annexed the store next door, which gives them an additional 5,000 square feet of space. Their new address

in future will be 316, 318, and 320 Fourth Ave., South, Minneapolis, Minn.

---

THE AMERICAN PHOTOGRAPHIC TEXT BOOK Co., of 360 Adams Ave., Scranton, Pa., have just issued a very handsome new prospectus, describing in detail the "Complete Self-Instructing Library of Practical Photography." The book contains a double page engraving, showing fifty-two of our leading portraitists. Another plate shows us Editors Chambers, Fraprie, and French, with Presidents Garo and Rau getting through their daily work assisted by the Library. If you are not a possessor of this great self-instructing library, send for a copy of the new prospectus, it may help you to decide to invest in the Library. It will be an investment that will bring you much pleasure and profit.

---

THE TAYLOR-HOBSON Co. has removed from the seventeenth floor to the fifteenth floor of the St. James building at Broadway and 26th St., New York. The firm has occupied offices in this building continually since they opened the American branch nearly nine years ago, but this is the fourth move that they have found it necessary to make in order to meet the growth of their business. The new offices are much more spacious and convenient in every way.

It is interesting to hear that the sale of Cooke anastigmat lenses this year is already far in advance of any previous year during the same period. The new Cooke-Telar lenses, moreover, have "caught on" to such an extent that it is a difficult matter to obtain them fast enough from abroad. One firm of photographic dealers remarked recently that never before had they received so many inquiries about a new lens as they now receive about the Cooke-Telar.

---

THERE is an infinite variety of prepared developers on the market, and a right choice becomes somewhat bewildering. For all round efficiency and satisfaction, we can recommend the Montauk Brand of M.Q. Tubes, the M standing for Metol-Hauff, and the Q for Quinol (Hydrokinone), chemicals with an established reputation. Montauk M.Q. developer dissolves readily into a clear solution free from sediment; each tube develops the maximum number of prints, producing clear whites and warm blacks. We can specially recommend them for plates, paper, and films. They are economical in use, and thoroughly dependable, and can be obtained from your dealer or direct from G. Gennert, 24 E. 13th St., New York, or 16–20 State St., Chicago, Ill.

---

RECORD earnings were made by the Eastman Kodak Company in 1910, figures for which were made public yesterday in the annual report. Net profits were $8,975,177 against $6,852,574 in 1909, the best previous year in the company's history, the increase of $2,122,603 representing a gain of 30 per cent. Dividends totaling $8,176,332 were paid, an increase of $1,950,180 over the sum disbursed to stockholders in 1909. The rate paid on the $19,512,300 stock was 10 per cent. with the addition of extra dividends of 30 per cent., bringing the total disbursement up to 40 per cent., 10 per cent. more than the rate of 1909.

The regular 6 per cent. dividend on the preferred stock called for a disbursement of $369,942. The surplus at the close of the year was $9,211,871, of which $798,845 was added in the year just closed.

---

THE CHICAGO PHOTO SCENIC Co., of Chicago, Ill., makers of high grade backgrounds, advise that owing to the number of competitors making use of similar firm names, they have decided to change their name from the Chicago Photo Scenic Co. to Seavey Co. There will be no change in the business, officers, or products, the change being in name only. The address, 140 Dearborn St., Chicago, will remain the same.

---

FOR many kinds of work, backed plates are indispensable. It should be more generally known that the famous Imperial S. S. plates—that Brown Box with the Red Label, manufactured by the Imperial Dry Plate Co., of England, and the Imperial Non-Filter Plates can be supplied backed, and at the same list price as the non-coated. They are cheaper and better than a double coated plate. Give them a trial. G. Gennert, New York, is the U. S. sales agent.

---

THE ANSCO COMPANY have just issued a handsome folder, "Recruiting for your Business," showing a series of full page advertisements which are being used in all the leading magazines of the country. They are very artistically and attractively set up, and are headed by a first class picture showing the many uses and good points of Ansco Films. Such an elaborate and extensive campaign is bound to have a marked effect on the demand for Ansco Film and Cyko Paper, and dealers handling these lines will profit largely from such widespread advertising.

---

IF you are looking for a studio shutter that will give the highest efficiency, the greatest reliability, smooth action, accuracy, and freedom from noise, it will pay you to investigate the Low Studio Shutters, manufactured by the Kalamazoo Shutter Co., Kalamazoo, Mich. They have been used by the leading photographers for many years, and have stood the test of time.

# WILSON'S PHOTOGRAPHIC MAGAZINE

A MONTHLY MAGAZINE FOR PRACTICAL PHOTOGRAPHERS

Founded in 1864 by EDWARD L. WILSON
MRS. EDWARD L. WILSON, Publisher and Proprietor
L. WINIFRED WILSON AND T. DIXON TENNANT, Editors

EDWARD L. WILSON, 122 EAST TWENTY-FIFTH STREET, NEW YORK
*Entered at New York Post-office as Second-class Matter*

**Yearly subscription in advance, United States and Mexico, $3.00; Canada, $3.25; Foreign Countries, $3.50. Single copies, 25 cents. Subscriptions begin with current issue unless otherwise ordered. Original manuscripts on photographic subjects are solicited, and, if accepted, will be paid for on publication.**

## EDITORS' TABLE.

TREASURER A. L. DOZER of the National Association, asks us to draw attention to a few points in connection with the payment of member's dues to obtain the full benefit of the new arrangement made since State associations became affiliated with the National. First: the importance of holding a membership in an affiliated organization. Second, the importance of State associations paying their per capita tax promptly. Third, the importance of State members keeping membership cards, and presenting them when paying their dues to the National Treasurer.

All active members of the P. A. of A. will receive on May 1, a bill from Treasurer Dozer, for $3.00, for 1911 dues. Each Secretary of a State Association affiliated with the National will recieve as many membership cards, one for each member on whose membership the per capita tax of 25 cents has been paid to the Treasurer of the National. This he will fill in with the member's name, sign it, and send on to the member, who in turn will present it to the Treasurer of the National, remitting $2.00 with his signed card, as against $3.00 without such card. The members' card, showing him to be in good standing in his State association, will be returned with the official receipt showing membership in the National Association. In case dues are not paid until convention week, this card must be presented at the box office, otherwise the Treasurer will have to collect $3.00 from old members and $5.00 from new ones. Treasurer Dozer has no record of members of affiliated associations, and these cards are the only means of identification. Membership cards for 1910 or 1911 will be honored. Pay your State dues now and get your membership card, and then you can assist the National Treasurer by paying your National dues before the Convention. Remember that the official souvenir program, costing a dollar to produce, and worth much more, can only be mailed to members who are paid up for 1911.

THE March meeting of the New Jersey Professional Photographers' Association was held in Newark on the evening of March 13, with a good attendance. J. C. Abel, editor of *Abel's Photographic Weekly*, gave an interesting talk on "Factors which make up Success." A print committee was appointed, and arrangements were made to have each member photograph the same subject and the prints criticised at the May meeting. After the business meeting, refreshments were served.

---

A MOST interesting exhibition of large hand-finished portraits by members of the Professional Photographers' Club of Toledo, was held at the Toledo Museum of Art, March 20 to 26, and proved a big attraction, with good advertising results. All the pictures hung were by members of the Club, but no names were attached, the idea being to demonstrate to the public the superiority of work delivered by the bona fide studio in comparison with the cheap enlargements offered by salesmen travelling for the big enlargement factories. In addition to the enlarged portraits, a choice collection of ivory miniatures was on view.

---

AN exhibition of early and recent drawings and water colors by Pablo Picasso, of Paris, will be held at the gallery of the Photo-Secession, 291 Fifth Ave. (between 30th and 31st Sts.), New York, opening on March 28 and closing April 25. The gallery is open from 10 A. M. until 6 P. M. daily, Sundays excepted. This is the first opportunity given to the American public to see some of Picasso's work in this country.

The new and last exhibition of the season will be devoted to photographs—original prints—by D. O. Hill, the pioneer of modern pictorial photography.

By New Photographic Co., Berlin

# WILSON'S PHOTOGRAPHIC MAGAZINE

FOUNDED IN 1864 BY EDWARD L. WILSON

VOL. XLVIII MAY, 1911 No. 653

## AN UNFAILING SOURCE OF INCOME

WHEN business is quiet the photographer will sit around and think up a hundred and one reasons for the falling off in receipts. The weather is either too hot or too cold or it rains or snows. The crops have failed and there is no money for luxuries, or they are too good and there is no time for pictures. But of the many and varied reasons for a slack season we never heard it put forward that the children were not as numerous as ever.

How few photographers realize the possibilities of the never-failing supply of children of all ages and sizes, from the chubby infant to the dainty miss just coming out in long dresses. All of them possibilities of beautiful pictures. Each and every one of them the pride and glory of their proud parents.

How many parents could withstand the appeal of such a picture of child-like beauty and grace as our frontispiece makes? Every baby picture in your showcase is a direct challenge to every mother of an unphotographed baby. Is not her pride and joy a better-looking baby than any you have pictured in your showcase? Surely! and you should not have much trouble in persuading her to let you demonstrate the fact.

Of all the interesting showcase displays on Fifth Avenue, New York—and for wonderful showcases Fifth Avenue is unrivalled—the case that gets the most interested crowd of spectators is Mr. E. B. Core's case of children only, and their comments are always enthusiastically extravagant. But that is only their admiration for some one else's baby. Real owners of babies will place good orders for good pictures.

True! good pictures of babies are not easily made, but they are worth all the trouble you can take to get them. They are the best kind of advertising. A baby picture will attract the woman every time, and it's the woman who has the money to spend on photographs. The man is usually too busy getting the money to pay the butcher, the baker, and the coal man, to think about the photographer.

There are the seven ages of children, just as of man, and you ought to get

them in all the different stages of growing up. If properly trained, many parents can be persuaded to have a picture made on each succeeding birthday. The desirability of this annual record has never been sufficiently emphasized by the photographer. Your desk "tickler" or reminder should automatically advise you a few days ahead that one year ago Baby Brown had his picture made. Many parents would respond to a well-worded invitation to come and have baby's growth in size and increased beauty recorded.

Another advantage about photographing the baby is that he never comes to the studio alone. He is always fairly well attended by several members of the family, offering further opportunities for more business.

The enlarged picture offers an opportunity that is too often neglected. A particularly happy baby pose or expression will often make a charming picture when enlarged. To refer to Fifth Avenue again, one of the most attractive pictures on the avenue at the present moment is a delightful picture of a baby boy almost life size, sucking his thumb in a most natural and winsome manner.

Cultivate the baby, there are plenty of them, and the supply is unfailing.

## CURRENT METHODS AMONG BRITISH PROFESSIONALS

[THE following interesting account of British professional photographic methods is from the unique colonial number of *The British Journal of Photography*. With so many exchange visits from one side of the "pond" to the other the methods in this country and Great Britain are very much alike along certain lines.—ED. W. P. M.]

In this article our Colonial and Foreign friends, to whom this number is particularly addressed, will find a review of the present practice of professional portrait photography in the United Kingdom. It is impossible within the space of a single article to write at length of the many diverse methods at present in use, but we hope our general survey will show our readers in distant countries the present-day tendencies among photographers at home. To many of these latter also the notes will doubtless be of interest and will induce them, we hope, to take stock of their methods and policy, and thus keep themselves abreast of present progress in the business of photographic portraiture.

During the last two or three years there has been a marked growth of interest among professional photographers in the business side of a studio. More attention has been paid to creating a favorable impression upon possible customers by means of tasteful stationary, and the occasional circulation of an attractive booklet calling attention to special work produced at the studio, or whispering a reminder in the customer's ear appropriate to a particular season. Some photographers also have arranged small exhibitions on their premises and have thus drawn local attention to themselves.

The detail work of the business side of a studio has also received much greater attention, and many photographers have adopted some system or other of using a card index, whereby the progress of orders, from the reception room to the despatch of the finished portraits, has been readily traced—the system, too, allowing the proprietor more easily to keep himself informed of waste in materials, and generally to learn more exactly of the

profit resulting from particular descriptions of work. Quite a number of articles on this subject have appeared of late.

As regards the general business policy of photographers, we think we may take the hopeful view that there are signs of a reaction from the bane of cheapness which has of late been a serious factor in professional portraiture. The day of the portrait postcard, a form of competition which has been a thorn in the side of many a studio—particularly in the provinces—seems to be on the wane. This has no doubt been the result of the appallingly low prices at which these and other similar forms of portrait have been issued. Like fashions in ladies' clothes, when everyone from the humblest social rank can obtain a particular style of postcard, those who can afford to spend a little more become prejudiced against it and revert to a style of portrait which they had previously forsaken on ground of expense.

### *Business Tactics.*

There would appear also to be signs of a healthy reaction among photographers themselves against running after customers with invitations to a free sitting. Though a number of quite high-class studios have made this system the basis of their business, yet, on the other hand, many photographers of equal standing have steadfastly set their faces against it, and the public, we think, though flattered in many cases by the request of a sitting, has come to see that the invitation is, after all, an empty compliment, proffered simply to catch an order, and, at the same time, to give the photographer the sole copyright in the portrait he takes. Some photographers have justified the system as a species of protection against those sitters who go to a high-class studio, purchase one or two copies only, and then get some cheap printing or enlarging firm to make for them further duplicates embodying the skill and taste of the original photographer. There is, however, a natural protection against these tactics, inasmuch as the copies must be reproductions from prints, and can, therefore, never have the quality of direct impressions from the negative. Photographers are thus on the horns of a dilemma; yet we think that if a census were taken of studios which have established a sound financial position, it would be found that the invitation method was given an entirely subsidiary place in the business.

### *Studios and Studio Fittings.*

There is little that is novel in the construction or fitting of most high-class British studios, all the "tunnel" and other freak designs have either been demolished or put to other uses, and it is only in cases where local conditions necessitate it that the ridge-roof pattern is departed from. The majority of studios range from 25 to 40 feet in length, the breadth varying from 12 to 20 feet, the height to the eaves being about 8 feet, and to the ridge about 12 feet. Most studios are glazed for nearly their entire length, clear glass being generally used. The blinds are, in nearly all cases, mounted upon spring rollers, two sets, one set being dark blue or green and one set white; the side blinds have the rollers at the bottom. Festoon blinds or curtains are used in some studios, but they are not in favor in London, as they collect dust, which is discharged upon the sitter when they are manipulated. In places where this is not a drawback the festoon type of blind is no doubt more convenient, since it is free from the nuisance of the weakening of the springs

which occur in time. Portable screens and reflectors are becoming more and more popular, both in the circular and square forms, the latter being really portable blinds. The elaborate and fanciful reflectors formerly in vogue for electric light work seem quite to have disappeared. Scenic backgrounds are to be found in nearly every studio, but they are distinctly more artistic in character than those in use a few years ago, the design being suggested rather than drawn. The "marble halls" style is quite out of date. Soft "cloud" and graduated grounds are much in favor, and some of the most artistic workers are using a plain white ground with excellent effect. An attempt has recently been made to introduce colored backgrounds, but, so far, only a few are in use. If suited to the decoration of the studio they may be made to give a very good impression of space and elegance, the fact that the apparent continuation of the studio is only a painting not being obvious at the first glance. Some skill is necessary in the choice of such backgrounds. Artificial accessories of the "Haddon Hall steps" type are now seldom found in good studios, a stone seat and a sundial on its pedestal being usually the limit. A variety of chairs of more or less artistic design and a settee or garden seat or two afford all the aids to posing required by our best photographers. Even the once ubiquitous headrest is rarely seen.

### *Cameras and Lenses*

The working tools, such as cameras and lenses, do not present any novel features. The German type of universal studio camera, taking all sizes, is to be found in most up-to-date studios, although there is in some of the latest fitted a tendency to return to the English model, fitted with an extra back, with rapid changing attachment for small work. These are often fitted upon stands of the semi-centennial type so popular in the States, which permit of the camera being worked close to the floor. It is satisfactory to note that although of foreign design, most of the cameras and stands are of British manufacture. It is worthy of notice that few large cameras are now in use, 15 by 12 being usually the largest plate exposed for direct portrait work. Portrait lenses are still extensively used for single figures and head and bust pictures, and photographers are at last beginning to utilize the diffusion of focus arrangements with which most of them are fitted. The rapid rectilinear is quickly being displaced by one or other of the many anastigmats for group work and large portraits, and some of the more recent recruits to the profession have eschewed portrait lenses altogether, using rapid anastigmats of the Tessar and "Homocentric" types for small as well as large work.

### *Artificial Light*

The last few years have seen a very general introduction of artificial light, the great majority of the installations being arc lamps, either of the open or closed type. With the former the light is used entirely by reflection from an umbrella or other shape of reflector, while with the enclosed arcs the more common practice is to use the direct but well diffused light of the lamps. Both systems have their advocates, though we should say that among the very best exponents of artificial-light portraiture the open arc is most in favor. Nevertheless, the photographer of modest means finds that a single arc of the enclosed type is a most valuable tool, not only for portraits in the studio, but for printing purposes,

the same lamp being used for both with the assistance of a special circular frame, round the inside of which a large number of printing frames can be arranged. Where electric current is not available batteries of incandescent gas burners have been used and excellent work has been done with them in many studios.

### *Tank Development*

In the dark room the most notable improvement in professional work has been the adoption of development in a tank. In addition to saving much space, this system allows of the photographer getting through the day's development after the close of the studio in a much shorter time and with greater uniformity in his negatives. Those who develop their own exposures will frequently use the tank simply as a convenient mode of manipulation, judging the character of the negative by inspection in the dark-room light in the usual way; but many others have adopted the system of using a standard developer for a fixed time at a given temperature, and having settled (by trial) these conditions, have entrusted development to assistants, simply instructing them to make up the tank developer according to formula and strictly to observe directions as to time of development and temperature. These conditions must be observed or the method is useless, and, even so, the tank process has its drawbacks, the chief of which is the occasional production of markings on the negatives from some obscure cause or other. These, it must be admitted, are rare, and not sufficiently serious to discount the real practical and commercial value of the method. One precaution is most essential; the tank in which the plates are developed should be fitted with a watertight cover, so that it can be reversed in position three or four times during development, thus insuring the even action of the solution. A common time of development by this fixed-time method is from twenty minutes to half an hour, and most plate makers now give formulæ suitable for the system, though even then the time needs to be checked for different batches of plates, since these may vary considerably as regards the time required for development to a given degree of contrast.

### *Styles of Portrait Prints*

Competition was never more strenuous in photography than it is today—whether as between the manufacturers, the wholesale dealers, or the professionals themselves. To this competition are undoubtedly due the rapid changes in the prevailing styles of portraiture witnessed during the last few years.

### *Imitations*

A professional will strike out a new style in order to differentiate his work from that of his competitors, but before long he will find imitations springing up, not only by other professionals operating along the same lines, but by means of, as it were, mechanical reproductions furnished to his lower-priced competitors by the manufacturers. For instance, border-printing in the so-called Cosway style had not long been in vogue before mounts were produced incorporating the border, thus dispensing with the necessity of double-printing. Another firm produced an accessory in the form of a papier-maché contrivance, which, when interposed between the sitter and the camera, gives the sitter and the border together on the plate. Following the Cosway style came the "Sketch" portrait, in which the sitter is photographed against a

white background and then a "sketchy" exterior or interior effect is worked in by hand on the print. Here again imitation was soon rendered easy by the introduction of backgrounds with continuous foregrounds with a design painted on, which, when photographed with the sitter in a certain position, would give a somewhat similar effect.

### *The "Sketch" Portrait.*

Despite this imitation the "Sketch" still holds its own, as may easily be seen by a walk along the fashionable West End streets or a glance through the illustrated weeklies. Instead of the aërographed backgrounds with which they were at first finished, they are now largely done with pencil, and frequently with washes of water-color. This water-color is only added decoratively —they are in no sense colored photographs, in that the hair, eyes, and flesh are left untouched. It will be seen that this is a style that is neither easily imitated nor cheapened. It is worked almost entirely in platinotype when the colored wash is added, as bromide does not lend itself well to the application of water-color washes, although Messrs. Wellington and Ward have recently introduced a special surface, adapted for this purpose, which they offer to those interested in this branch of work.

### *For Colored Photographs.*

Where a colored photograph is wanted, that is, colored in the ordinary sense of the word, the best studios are now making very effective pictures by blocking out the whole of the negative with the exception of the head and such portions of the bust, arms, and, in the case of young children, legs as may be visible. The clothes and background are then sketched in pencil and the photographic image daintily finished in water-colors. In the hands of a skilful artist some charming effects may thus be obtained—the child photographed sitting on the studio floor playing with toys may thus easily be represented as either sitting on the seashore playing with shells or in a meadow picking daisies!

### *The "Sketch" Negative.*

When travelling in the provinces, or even in the London suburbs, one notices that photographers are endeavoring to make these "Sketch" pictures from unsuitable negatives. Although a good retoucher can do a great deal in the way of blocking out a negative taken against a dark background, it frequently happens that the outline of the sitter's head or dress is such that it cannot be blocked out without presenting a cut-out appearance. Again, even with the white background, the lighting is badly managed, and there are bad shadows. Recent issues of the "B. J." have given articles on the subject, so there should be no reason why the slight difficulties attending the production of suitable negatives should not be overcome.

### *Cream-toned Papers.*

Quite a number of photographers are giving a distinctiveness to their work by the use of a cream-toned paper. This color has been available for some years in both bromide and carbon, and also in the self-toning papers, but only comparatively recently does it seem to have been taken up by professionals to any extent. The latest introduction in the cream papers is that of the Buff Sepia Japine and Platinotype—papers which were doubtless put on the market to share some of the patronage bestowed by good class studios upon the matt cream carbon transfers.

*The Neglect of C.C.*

The visitor to England from either the Continent or the States must be struck by the small use of Collodio-Chloride in this country—small, that is, as judged by the extent to which it appears in showcases. Why this should be so is difficult to determine, since any printer used to gelatino-chloride should be able to produce good prints on the collodion paper. One reason that may perhaps have had something to do with it is that collodio-chloride is so frequently offered by its vendors as a substitute for carbon—in fact, it is often made to appear that its only virtue lies in its resemblance to that process. If this be the case the policy is a mistaken one. Be that as it may, the professional whose arrangements do not permit of his working platinotype or carbon as an alternative to P.O.P. may well consider the claims of collodio-chloride.

*Mounts.*

In the matter of mounts one of the chief tendencies to be noticed is the adoption by professionals of the multiple or border mount, which, during the last few years, has so largely come into favor among amateurs. Mount-makers have catered for studios in this respect by issuing multiple border mounts suitable for the reception of prints of the standard sizes. The folder type of mount, a somewhat stiff cover enclosing a print mounted on a thin board, continues in favor, but it may be questioned whether the large limp mount issued without such protection is the kind which will continue to satisfy the public. It is so easily damaged that framing is almost a necessity. We believe the public would appreciate a stiffer board, which would be equally suitable for framing, and, in the smaller sizes, for insertion in albums. Dry-mounting by means of shellac tissue continues to gain in favor in all directions, although, of course, in large numbers of studios producing the cheaper class of work, mounting with starch, or with one of the many excellent dextrine pastes now on the market, continues to be in vogue.

## STAINED FINGERS AND HOW THEY MAY BE AVOIDED

As the members of the photographic society to which I belong sat around the table the other night, I could not help noticing what a large proportion of them revealed the fact that they were photographers by the condition of their hands, especially of their finger tips and nails, which in many cases were badly stained. It is quite possible to photograph, and to carry out all the work, from the development of the negative to the finishing of the print, without in any way staining the fingers, and there are plenty of amateurs who do this; but certainly among the members there were a goodly number who had failed to keep their finger tips unsullied, and so a topic for a note in *Photography and Focus* was suggested by those discolored digits.

Stains may be either prevented or removed, and so the subject must be dealt with from two distinct points of view; one showing how photography can be carried on without any stains being formed, and the other telling how to get rid of stains when their formation has not been avoided.

The principal staining agents are developers and silver solutions. Taking

developers first, there are two which are likely in themselves to cause staining—pyro and amidol.

Pyro as it used to be employed, without sulphite, or with an insufficiency of that useful chemical, was a bad stainer, making the finger tips and the nails a dark brown, which took a great deal of removing. Pyro as now used, in the pyro-soda formulæ which most plate makers give, does not stain the fingers if only a few plates are developed at a time, but when there are a large number to be done, as on the return from a holiday, if the fingers are dabbled much in the solutions, they are almost sure to be discolored.

Amidol acts in much the same way. It is a beautiful, stainless developer for prints or negatives which are only in it for a few moments; but anyone working with it constantly finds that it has a powerful action, particularly on the finger nails.

Finger stalls have been suggested, but few people can work with them with any comfort, while very much the same remark applies to plate lifters and other devices for keeping the fingers out of the solutions. Some careful and methodical photographers use them, but the majority of amateurs prefer to handle the plates without such intervention.

A good deal can be done to protect the fingers, however, by the use of some preparation which will keep the solutions out of pores and crevices from which it is difficult to remove any stain that may lodge. For instance, if the finger tips are well rubbed with vaseline or lanoline, or some similar fatty substance, taking care to get it well into the corners by the nails, etc., and they are then wiped superficially clean, it will be found a very much easier thing afterward to remove any stain.

A most effective device against staining is to dissolve a crystal or two of sodium sulphite in three or four ounces of water, and to add to the solution a few drops of sulphuric acid, or a crystal of citric acid, and to have the measure containing this solution, which should smell strongly of sulphurous acid, standing in some convenient position. From time to time the fingers may be dipped into it for a few moments, and then be rinsed under the tap.

If vaseline or any similar thing has been applied to the fingers, soap or hot water should not be used for these intermediate washings, but when all is over, a good brushing with a nail brush, soap, and warm water will remove most of the stain, while a little pumice stone will at once get rid of any that is left, since it will be sure to be in a readily accessible place.

A very effective stain remover is made by mixing a teaspoonful of the "chloride of lime" of the oil shops (a metal teaspoon must not be used as the measure) with four or five ounces of water, and rubbing this on the fingers, following it up by rubbing with a little of the ordinary hypo bath, and a wash with warm soap and water.

Silver stains are to be prevented in much the same manner. It should not be forgotten that a hypo bath in which any plate or print has been fixed contains silver in solution, and although ordinarily it is not in a form in which it will cause a stain, it may do so in certain circumstances. If brought into contact with sodium sulphide or ammonium sulphide, for instance, it at once causes a stain, and one with which all the ordinary treatment for the removal of silver stains is ineffective. For the stains made by the silver intensifier, etc., a ferricyanide and hypo reducer is the best cure. The acid permanganate reducer is even more immediately effective, but it leaves behind

it a brown stain which needs removal with acidified sodium sulphite or with oxalic acid.

There is a point which is sometimes overlooked in this connection, and that is that solutions which do not themselves stain may be the cause of stains. Developers which contain a large proportion of caustic alkali or of carbonate, those which feel very soapy to the fingers, soften the skin, and leave it very prone to collect dirt in the pores. There is a characteristic dirtiness of the fingers, which it is extremely hard to remove, which is due to some softening action of this kind, followed up by the use of some solution which may leave a deposit of some kind in the crevices of the skin. Such solutions include platinum developers, gold toning baths, etc.

All said and done, the real secret is to keep the fingers out of all solutions as much as possible, and to rinse them constantly. If this is not done, even when they are not actually discolored, it will be found that the action of the chemicals on the skin and nails is such as to destroy the smoothness and characteristic color of those structures when in a normal, healthy, unaffected condition. With such precautions as have been described, and with a liberal use of nailbrush and hot water immediately after the work is done, there is no reason why any amateur's fingers should show any signs of his hobby.—*Photography and Focus.*

## BROMIDE PRINTING

(Concluded from page 160.)

THE restraining effect of potassium bromide is not very marked with amidol developer; and its action appears to be confined to keeping the whites pure. The best restrainer for use with this developer, when one is needed, will be found to be citric acid. A few drops of a 10 per cent. solution has a very marked restraining action.

### *An Amidol Developer that will Keep*

In the *Photographic News* for April 6, C. Welborne Piper drew attention to the keeping qualities of amidol when made up with a neutral sulphite solution. This solution consists of four ounces sulphite of soda, one ounce metabisulphite of potash in twenty ounces of boiling water. A developer that will keep and act well for a long time, even if used repeatedly, is:

| | |
|---|---|
| Amidol . . . . . | 5 grains. |
| Neutral sulphite solution . | 1 ounce. |
| Water . . . . . | 1 ounce. |

### *Rodinal*

Rodinal, in the concentrated form as purchased, can be regarded as an even simpler form of developer than amidol. Water and potassium bromide are the only additions necessary to make a reliable developer for bromide prints; but in many workers' hands it does not give such fine blacks as amidol. The correct procedure with rodinal is to develop with a dilute developer consisting of rodinal, ten minims; potassium bromide 10 per cent., three drops; water, three ounces, or any larger quantity in the same proportions. If the paper has been correctly exposed, a weak, gray image will appear in about a minute. The developer should then be poured off and rodinal twenty-five minims, potassium bromide five minims, added to it and well mixed. This is poured back on the print and development completed. A good black tone should result.

### *Metol-Hydroquinone*

Both metol and hydroquinone have qualities of their own that commend them to the bromide paper worker, notably cleanliness of working and the number of times they can be used before exhausted. Metol, however, has, unfortunately, an affinity for the cuticle of some workers, and its well-known effects debar its use. It is, nevertheless, used extensively by more than one trade enlarger, and professional bromide printers who employ it find it very rapid in action and certain in results. The rapidity of metol is somewhat against its universal adoption, although by following a certain procedure, as with rodinal, fine, black tones are obtainable. It is in combination with the slow acting hydroquinone that we get an almost ideal developer. Used either as a one, two, or three solution developer, metol-hydroquinone acts equally well. For general purposes the following one-solution formula will be found to give greatest satisfaction for correctly exposed bromide prints:

| | |
|---|---|
| Metol . . . . . | 16 grains. |
| Hydroquinone . . | 60 grains. |
| Sodium sulphite . . | 1½ ounces. |
| Sodium carbonate . . | 1½ ounces. |
| 10 per cent. potassium Potassium bromide solution (10 per cent.). | 40 minims. |
| Water . . . . . | 40 ounces. |

### *Ortol*

Ortol has also considerable claims for attention as a satisfactory developer for bromides, and, unlike amidol, it is slow acting. A certain amount of time is therefore necessary for the image to gain full strength, especially if the developer is used in a dilute form. It keeps well in solution, does not stain, and can be used several times before exhausted. A good formula is:

| | |
|---|---|
| A. Water . . . . . | 20 ounces. |
| Sodium metabisulphite | 150 grains. |
| Ortol . . . . . | ½ ounce. |
| B. Water . . . . . | 20 ounces. |
| Sodium carbonate . | 1 ounce. |

Equal parts of each are used for obtaining a good black color, but it will be found that with increased exposure and the addition of potassium bromide, pleasing warm tones are easily secured with this developer.

### *Fixing and Washing Bromide Prints*

An acid-hypo fixing bath is recommended for bromide prints as follows:

| | |
|---|---|
| Hypo . . . . . | 4 ounces. |
| Potassium metabisulphite | 200 grains. |
| Water . . . . . | 1 pint. |

This bath will keep clean for a long time and fixes quickly. Prints should be fixed for at least ten minutes—longer in cold weather.

If preferred, a plain hypo bath, four ounces to the pint, can be used, but this should be renewed frequently.

After fixing the prints they require thorough washing in running water, or frequent changes to thoroughly eliminate the hypo.

The prints should then be hung up to dry. They should not be dried between blotters.

### *Modifications of Developer and Exposure*

For black tones a certain exposure and development are necessary, no matter what the developer may be. Pyro, under certain conditions, will give as black an image on bromide paper as ferrous oxalate. If any developer used to produce black tones is applied to a print that has received more than the normal exposure, a flat, dirty-colored image is produced. If a restraining agent, such as bromide of potassium, is added to the developer

the gradations of the image will be produced so that contrast is restored, but the color will be different, and probably disagreeable. Investigations have shown that a pleasing range of tones can be obtained by careful observance of the relative proportions of exposure, amount of restrainer used and the dilution of the developer. In addition to this, certain developers have been found to more readily give warm colors, and certain brands of paper appear more amenable to the treatment than others.

### *Pyro for Warm Tones on Bromide Paper by Development*

Pyro, used either in a simple pyro-soda formula or in conjunction with some other reducing agent, preferably metol, stands easily first as a developer for warm tones on bromide papers.

Adurol and edinol will also be found to yield warm tones with considerable ease, but in all cases the main factors that govern the result are the exposure and the relative dilution of the developer.

The following pyro-soda developer will produce a fair range of tones from black to bronze brown:

| | | |
|---|---|---|
| A. Pyrogallic acid | ½ | ounce. |
| Sodium sulphite | 3 | ounces. |
| Citric acid | 1 | dram. |
| Ammonium bromide | 1 | dram. |
| Water | 10 | ounces. |
| B. Sodium carbonate (crystals) | ½ | ounce. |
| Sodium sulphite | 1 | ounce. |
| Potassium bromide | 1 | dram. |
| Water | 10 | ounces. |

With twice the exposure that has been ascertained to be correct for the production of black tones with the normal developer employed, this formula will give rich, warm, black tones. For use, take thirty minims of A and eighty minims of B, and add four ounces of water. Double the exposure, double the quantity of water, add twenty minims of a 10 per cent. solution of potassium bromide, and the color produced will be very much warmer. Further increase of exposure will tend to produce still warmer tones, but it must be borne in mind that the developer must be proportionately diluted and more bromide added.

### *A Pyro-Metol Developer*

Later experiments with pyro as a developing agent for the production of warm tones on bromide papers have shown us that a greater range of tones can be produced with far less chance of staining the paper if metol or hydroquinone forms one of the constituents of the developer. In any case, it will be observed that an apparently abnormal quantity of sulphite of soda is present in the formula. This has been found necessary with any developer for prints in which pyrogallic acid forms a part, to counteract its staining propensities. This additional quantity of sulphite does not appear to be required when edinol or adurol, or, in fact, when any other developer but pyro is employed.

The following modification of a formula we have employed for a considerable time in the production of warm toned bromides will be found to give a variety of tones. It will soon be discovered, however, that different makers' papers give an entirely different range of tones with exactly the same treatment, and a tone that is easy to obtain and repeat on one brand of paper is difficult to reproduce with the same developer and exposure on another.

With the formula given below, however, it will be found that tones ranging from warm black through olive-sepia, cool-brown, golden-brown, pinky-brown, to a red tone similar to that obtained by copper toning, can be obtained.

The following is the formula:

| | | |
|---|---|---|
| A. Pyrogallic acid | 30 | grains. |
| Metol | 30 | grains. |
| Sodium sulphite | 1 | ounce. |
| Potassium bromide | 30 | grains. |
| Water | 20 | ounces. |
| B. Sodium carbonate | 3 | ounces. |
| Sodium sulphite | ½ | ounce. |
| Water | 20 | ounces. |

For use take equal parts of each. With a normal exposure a pleasing warm black tone will be obtained. If development is completed too soon the tones will suffer. The longer the development takes, the richer the colors will be, and the better the rendering of the shadow details. The developer should, therefore, be diluted considerably if the negative shows any indication of flatness. With a plucky negative this precaution will not be so necessary.

### *Modifications for Warmer Tones*

Here, again, as with the pyro-soda formula given above, the resultant colors depend, to a great extent, upon the amount of the exposure and the quantity of the restrainer and water added. A 10 per cent. solution of bromide of potassium should be kept for the purpose, and the following exposures will approximately indicate the colors obtained. In the following table it is assumed that ten seconds' exposure with a normal negative is sufficient to give a black color with a normal amidol or metol-hydroquinone developer:

| Exposure. | Dilute 1 ounce of pyro developer with water. | Add 10 per cent. bromide of potash solution. | Resulting color. |
|---|---|---|---|
| 15 secs. | 2 ozs. | | Warm black. |
| 20 secs. | 4 ozs. | 10 mins. | Warm bronze-black. |
| 25 secs. | 8 ozs. | 20 mins. | Warm olive. |
| 30 secs. | 16 ozs. | 30 mins. | Bronze sepia. |
| 40 secs. | 30 ozs. | 40 mins. | Warm sepia. |
| 50 secs. | 60 ozs. | 50 mins. | Pinky brown. |
| 60 secs. | 80 ozs. | 60 mins. | Rusty red. |

The time of development increases in proportion to the amount of water added.

### *Adurol as a Developer for Warm Tones*

Next to pyro and pyro-metol, adurol has the best claims to be considered a desirable developer for warm tones on bromide paper. It is clean-working and economical, and, made up as a concentrated one-solution developer, requires only dilution for immediate use.

The following formula is recommended:

| | |
|---|---|
| Sodium sulphite | 4 ounces. |
| Carbonate of potassium | 3 ounces. |
| Warm water | 10 ounces. |
| When dissolved, add adurol | ½ ounce. |

Three other solutions will be necessary for the production of warm tones: They are 10 per cent. solution of potassium bromide, 10 per cent. solution of ammonium bromide, and 10 per cent. solution of ammonium carbonate.

### *Making Enlargements*

Bromide paper is particularly suitable for the production of direct enlargements from negatives, and in this respect no other printing process can compare with it. Enlargers for the purpose are either daylight self-contained enlargers, daylight projection enlargers, or artificial light enlargers.

The former kind are extremely useful, and as they are supplied ready made by most dealers, need little description. In form they resemble a double-ended camera—large at one end and small at the other. The negative is carried in the small end and the bromide paper adjusted in a dark slide at the other. The lens is placed in the division between the two ends, and the apparatus is directed out of window or toward the sky.

The enlarged image of the negative is then thrown by the lens on to the bromide paper, being previously focussed on the ground glass screen in the same manner as any ordinary camera.

Daylight can, however, be used to project the image on to a board or easel, by darkening the window of a room, leaving only a space sufficient to take the back of the camera. The camera is fixed on a shelf, so that the end taking the dark slide is in this opening, and the negative is placed in the ordinary position in the camera in a dark slide with both shutters drawn. A white card reflector is placed outside the window at an angle of 45 degrees, so that an even flood of light is sent through the negative.

Inside the room no light whatever should enter, except through the lens of the camera. The camera then acts as a projection lantern, and the image is cast on to the easel containing a drawing-board, on which the bromide paper can be pinned. Manipulation of the paper can be carried on by capping the lens with a yellow glass cap.

### *Enlarging Lantern*

The easiest method of enlarging, however, and probably the best, is to have an enlarging lantern. This is but a variation of the familiar magic lantern, and the optical properties, although considerably better, are the same. The negative is placed in a carrier in the position usually occupied by the lantern slide, and the image is thrown on to a sheet of bromide paper. The room in which this is accomplished is, of course, quite dark, or only illuminated with a yellow light. The exposure may vary from a few seconds to many minutes, according to the light used in the lantern and the density of the negative. After the exposure the paper is treated in exactly the same way as that described for contact printing.

Enlarging by artificial light is most in favor, first, on account of its convenience; second, because of the uniformity of the light obtained and the certainty with which an exposure can be repeated or compared; and, third, by reason of the great number of excellent enlarging lanterns that have been put on the market during the last few years.

There is no doubt that artificial light, if good and properly managed, is more reliable for the majority of bromide enlargements than daylight. Daylight, nevertheless, possesses a quality of its own for projection purposes that no artificial illuminant can hope to rival, yet the latter, in certain cases, is far more suitable for obtaining the best results. In most instances, however, daylight appears to be the only light that can do full justice to very dense or hard negatives.

No amount of exposure with oil, or incandescent gas, and a negative of this description, will give the better results that can be obtained with a more powerful light, such as lime light, the electric arc, or daylight; yet it is frequently attempted, and the print gaily entered in competition or exhibition, presumably as the best the negative is capable of giving, and perfectly satisfactory to its producer.

Enlargements obtained under these conditions are never pleasing: the shadows have usually been blocked up long before the comparatively weak light has penetrated the denser portions, and the lack of gradation in the negative has been intensified instead of assisted so as to produce harmonious results.

If, however, a thin negative is used, the weaker light has a far better opportunity of making a plucky enlargement

on bromide paper, and the effect obtained will be much the same as that given by an intensification of the image. Moreover, the greater the amount of enlargement, the greater this gain in contrast will be.

### *The Speed of Bromide Papers*

Apart from the question of the illuminant, however, there is another important factor that comes to our aid when dealing with negatives of varying density and contrast, and one that has received little of the attention it merits. We refer to the speed of the bromide paper.

Adapting the printing process to the negative has been long recognized as a means of making the most of the character of the developed image, and in some instances even finer differences in quality are possible by modifications of the same process. This is particularly the case with bromide printing. A knowledge of the different characteristics and speeds of the various brands on the market, and their correct application, ought to be productive of a much higher average of really good results than obtains with present methods.

### *Suiting the Bromide Paper to the Negative*

Briefly stated, a rapid paper will give the most pleasing enlargements from a hard, "contrasty" negative, and, of course, will shorten the exposure necessary for a very dense one. A slower paper will give a "bright" enlargement from a flat negative, and enable the exposure to be well under control with a thin one.

Experiments with recent batches of several different brands of bromide paper demonstrated that their relative speeds vary almost as much as the speeds of plates, and, like plates, each variety is particularly suitable for obtaining the best results from certain originals under certain conditions of exposure.

This does not mean that they are unsuitable for obtaining good prints from other types of negatives than those for which they are specially indicated. Most bromide papers nowadays are so carefully made and reliable, and capable of so much latitude in exposure, that unsatisfactory prints ought never to occur. Still, each negative that is not "technically perfect" in point of density and gradation is capable of giving a *best* enlargement more easily on a brand of paper with a speed suited to its quality.

A dense, harsh negative more readily finds a creditable interpretation on rapid bromide paper than on a slow variety, and a thin negative is better rendered by slow paper than by a quicker brand.

As most amateurs' negatives include both of these varieties, different brands of paper should be employed for each kind.

### *Combination Printing in Enlargements*

To satisfactorily effect combination printing when dealing with contact work from two or more negatives calls for a certain amount of manipulative skill, patience, and observation. To achieve the same result when making direct enlargements on bromide paper from a similar number of negatives is more difficult, and the difficulty increases with the number of negatives employed and the extent to which the combination printing is carried.

This form of printing can be broadly divided into two varieties — one in which a large and well-defined section of one negative is added to an equally

well-defined portion of another, as when clouds are printed in over a landscape; the other is when a small portion from one negative is substituted for a similar amount in another picture, as in the case of printing-in figures from one negative to a landscape or other view.

A practical acquaintance with the possibilities of these methods of combination printing in making direct enlargements may often be the means of securing extremely pictorial results from very unpromising material.

### *Printing in Clouds*

The simplest form of combination printing is accomplished when clouds are added to a landscape. The landscape negative may already have certain cloud forms indicated in the sky, or the sky may be perfectly blank. In either case, the principle of the process when making an enlargement is, of course, similar to that followed when making a contract pint; the sky portion of the landscape negative is shielded from light while the foreground part is exposed, and the landscape of the print is then covered while the clouds are printing from the second negative. The ease with which this is accomplished when the image is projected on to the exposing board by the enlarger depends upon the amount of detail showing above the sky line, such as isolated trees, chimney pots, or church spires.

### *Two Methods of Printing*

To deal with this form of combination printing first, two alternatives are at hand for securing correct joining up of the two parts of the picture. The landscape and clouds can be projected on to the bromide paper, gauging where the two images meet when shielding them, and then developing the print in its entirety; or one portion of the print—say, the landscape—can be developed, and the exposure then made for the clouds on the partially developed print.

With the first method, a very little practice will enable the worker to accomplish a perfect fusion of sky and distance that will betray no evidence of a hard join. We assume, of course, that a knowledge of ordinary bromide enlarging exists, and that the usual precautions regarding correct lighting and perspective are observed when adding clouds to landscapes

The secret of successful cloud printing in enlarging is to keep the margin of both cloud and landscape very soft and diffused, so that one may overlap the other to the extent of nearly one-third of the total amount, and so level up the exposure. Many workers, when printing in clouds to a landscape with the enlarger, make the margin of the shielded portion far too hard and well defined, with the result a very distinct mark, or band, is to be seen running across the print where the join was made.

### *Masking*

When the image of the first negative, usually the landscape, is projected on to the screen, the sky portion is shielded by a piece of dark cardboard with a straight edge, held quite close to the lens. The reason for using a dark piece of card is that the light reflected from it will, when close to the lens, be reflected back from the front of the enlarger, and may fog the bromide paper. We have traced this cause of fog in cases where a piece of white card has been used to shield a portion of the projected picture, and a strong light (lime light) was used.

It is a mistake to put the shielding piece of card too near the print; in no case, unless a particularly definite spot is to be blocked out, should the card be nearer than half way between lens and paper. During the exposure the

card should be moved to and fro. As it approaches nearer the lens, the shadow cast becomes larger and the line more diffused, and as it gets closer to the print it becomes more sharply defined.

By moving the shield in this direction and also up and down, so that the shadow moves from well into the landscape to half way into the sky, a very soft vignetted effect will be obtained. The limits of the moving shadow should be bounded by the most prominent point above the horizon of the landscape and the lowest point at which the sky is visible.

### *Printing the Clouds*

When the exposure is deemed complete for the landscape portion, the yellow cap is replaced on the lens and pencil marks are then made on the margins of the print, indicating the highest point referred to and also the mean level of the horizon.

The bromide paper can then be removed from the exposing board, and having carefully marked the top it can be put away in a drawer or other light-tight receptacle.

The landscape negative is removed, the cloud negative substituted, and, if necessary, refocussed if it is a smaller or larger size, or only a portion is required.

The yellow cap is again put on, and the bromide paper readjusted on the board, placing it so that the cloud form falls in its proper place in relation to the horizon indicated by the pencil marks.

The previously ascertained exposure for the clouds is then given, and the same piece of card used to shield the portion of the bromide paper that has already been exposed. This is shown by the rough pencil marks, and if the shadow of the card is carried through the same region as when masking the sky, not only will the two broad vignettes blend perfectly, but the joint exposures will also combine to give a normal exposure to this partly shielded band across the print. In this way any projecting objects above the sky-line—no matter whether they are lighter or darker than the general tone of the sky—can be preserved.

### *Combined Development and Printing*

The second method referred to, which can be termed combined printing and development, is particularly useful, both for cloud printing and any other form of combination printing when enlarging. It consists of developing the portion that is first exposed, and then adding the remainder of the picture to the partially developed print. The same procedure is required so far as masking the first negative is concerned, but instead of marking the paper with pencil as a guide for the following exposure, the part that is printed is developed forthwith. This can be effected by removing the paper from the board, and treating it in the usual way in the developing dish, or by sponging weak developer over the paper while still in position.

The former is usually the better plan, and the print should be rinsed in water before again affixing to the board.

Before this is done the second negative has been focussed, and with the yellow cap in position, the wet and partially developed bromide paper is replaced in correct position for the clouds, the image of which is already on the board.

It will generally be found sufficient if the wet paper is simply placed on the board and allowed to adhere without any other fastening. The exposure for the clouds is then made in the manner indicated, and the development of the entire print is completed.

By A. S. Weinburg
Groningen, Holland

By Aug. Sander
Linz, Austria

By d'Ora
Vienna

By Anny Heinmann
Charlottenburg, Germany

By J. Snelling
Munich

By Edmund Lill
Hanover

By Weltansstellung
Brussels

By Schlosser & Wenisch
Prague

By A Siebenbuner
Teplitz, Bohemia

By Adolf Bernhard
Klosterneuburg, Austria

By Ludwig Bab
Charlottenburg, Germany

By W. Huttemann
Barmen, Germany

By Otto Eberhardt
Coswig, Germany

By L Karl Stadelmann
Leonberg

By d'Ora
Vienna

By Herm Bahr
Dresden

By C. J. von Duhren
Berlin

By Pieperhoff
Leipzig

By Carol Novak
Bremen

By Anny Heimann
Charlottenburg

By R. Duhrkoop
Hamburg-Berlin

By Nicola Perscheid
Berlin

By Jeanetta Fiedler
Probnitz

By Jeanette Fiedler
Probnitz

By Alfred Krauth
Frankfurt on Maine

By Veritas Studio
Munich

By J. E. Langhans & Co
Pilsen, Austria

By Otto Ehrhardt
Coswig, Germany

*Copyright 1911, by American Photographic Textbook Co., Scranton, Pa., U. S. A.*

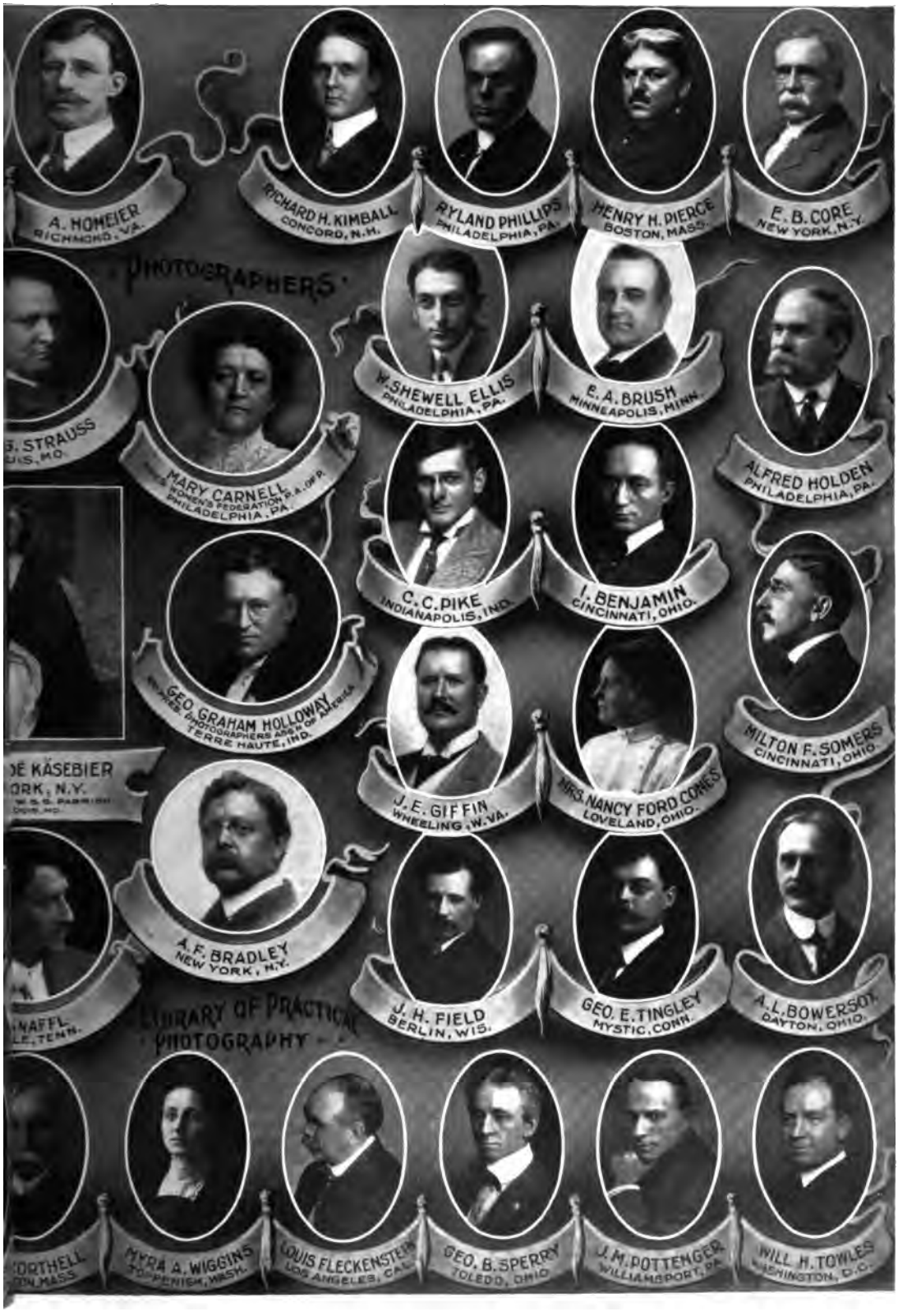


We'll mail an "Engraver's Proof" of this group, suitable for framing, on receipt of 10c to cover postage and packing.---AM. PHOTO. TEXTBOOK CO., Dept. T, SCRANTON, PA.

# A LITTLE LESSON IN LIGHTING

BY PERCY KING

(JUDGING by the number of requests for a good book on studio lighting we receive during the course of the year, it is evident that this subject bothers the photographer more than any other. We are glad to reprint from *Camera Craft* Percy King's very practical and useful "Little Lesson in Lighting."—ED. W. P. M.)

There has been so much written on the subject of lighting that I doubt if I can give much that has not already been hashed over and over by others. At the same time, I believe that half the photographers throughout the country know little more about the subject today than they did the first time they put their heads under the focusing cloth. At least, the work they turn out seems to indicate that such a situation exists. Possibly, by putting the matter in different form and by using a few simple illustrations, I may be able to arouse an interest in the subject that will lead a portion of them to realize the importance of the subject.

In the first place, one should have a light so constructed that the style of work wanted can be esaily produced. The construction of the skylight is, I fear, often denied proper consideration when a studio is put in. Plans are laid out for an attractive reception room and convenient dressing rooms; even the workrooms are given some thought; leaving the remaining space to be converted into an operating room. The result is an unsuitable light with which the average operator must contend, while, at the same time, he is expected to produce good work. Many seem to think that a light is a light, no matter how constructed, no matter how many cross lights are introduced, and no matter from where or at what angle the light comes. It is a light; the operator ought to be able to do anything under it; and few operators will try to help matters by some simple method of screening or controlling their light.

I once visited a studio in Boston where the proprietor had given the light some study before putting it in, and what was the result? He had a light that, with one or two screens, would allow him to get any effect he desired; he was simply master, at all times, of any light that entered his operating room. The room itself was 30 by 60 feet; the light starting twelve feet from the rear wall, two and one-half feet from the floor, and was eighteen feet wide. It extended straight upward five feet as a side light, and then eighteen feet at an angle of about 40 degrees, as a top light. It was all ground glass, except a strip four feet wide across the lower part of the top light, which was clear glass. All the curtains were opaque. The twelve feet back of the light allowed control of the tone of the backgrounds and gave more atmospheric effect than would be possible with the grounds close to the subjects. A certain studio in Philadelphia, where the light was designed for bust and three-quarter figures only, was about as near perfect as any I ever had the pleasure of demonstrating under. The room was about 20 by 30 feet, with the light, 8 by 8 clear glass, directly in the centre of one of the longer sides, perpendicular, and started four feet from the floor.

The operator realizes, or should realize, that all subjects cannot be lighted the same. Every face is dif-

ferent from every other, and many of them require their own special lighting to bring out their best points. Special lightings must be made to get the best results attainable. To adopt at once the best lighting, the one best suited to the subject, the operator must have full control of the light. One must first study the light being used and become its master. Then, when the sitter presents himself, he will know just what to do, will not have to push his subject this way and that for ten minutes before a place is found where it is thought the lighting will answer.

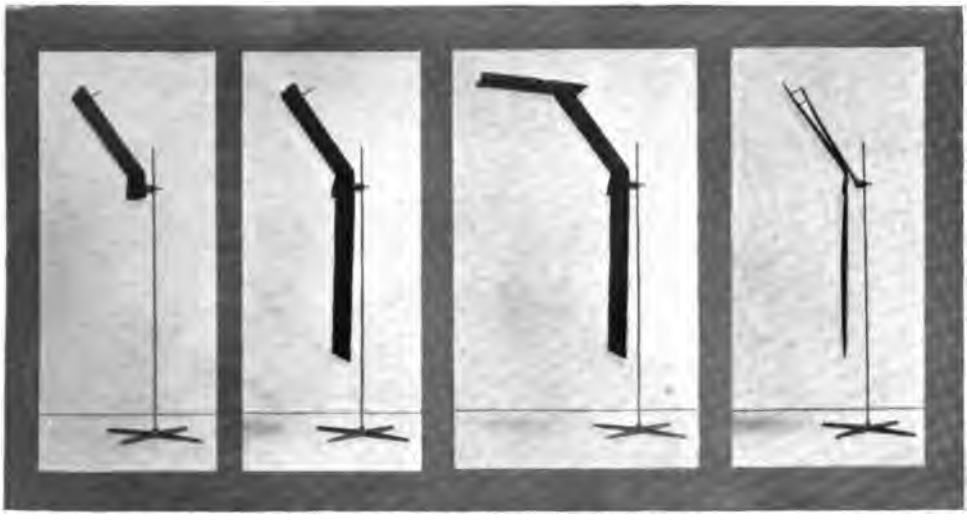

Middle section. With curtain. With top section. Top section back.

But how can one master his light? By using such means as have been worked out and placed at his disposal with the endorsement of many of the leading photographers of this country as well as abroad. I refer most particularly to the Percy King Light Controller, a device that in its perfected form is the result of my own experiments under all kinds of light during an experience extending over a number of years. As can be seen in the illustrations, it consists of an iron upright, one-half inch in diameter, set in an iron base or foot. The framework is of one-eighth inch wire, covered with black cloth. One could, of course, construct one with the aid of the local blacksmith; but it would be a crude and unsatisfactory affair, costing, in the end, as much if not more than the well-made and substantial article sold under the name given, by George Murphy, Incorporated, 59 East Ninth Street, New York. In buying the manufactured article, one also avoids any danger of infringing the patents, and I would advise their buying, rather than an attempt to construct a less satisfactory substitute.

With the aid of the illustrations herewith, I will try to give an idea as to how the Controller is used. I used it for over a year before it was placed on the market. It is, of course, impossible for either myself or the manufacturer to supply brains along with it, and I do not think so doing is necessary, believing most photographers have as much as I have; but I have visited studios where they had one of the

Controllers, but did not know how to use it, simply because the operator had not given it a half hour's study. They expected it to do the same for them that it did for others, without the use of their brains. If the reader will carefully go over the description of how to use it in the several cases illustrated herewith, and then make a few trials himself, he will know as much about it as I do, and find that there is not a lighting that cannot be made with it, and in a surprisingly short time. It will soon become, if not as essential, as important a factor in the production of good work as the camera. Many of the best photographers have told me that they would not think of making a sitting without using it to improve the lighting.

As shown, the Controller is simple in construction, light in weight, and does not get out of order. It is a screen, made in three sections, the frames being covered with any kind of material desired. For the usual skylight, side or side and top light, I prefer opaque cloth. For a window light, or an extra small light, I prefer black cheesecloth, keeping one or two extra pieces 24 by 24 at hand to be fastened on when I want the screens more opaque. Supplied with small hooks, these extra pieces are instantly applied to the frames. The middle section of the Light Controller is 24 by 24, fastened to a bar, which in turn is held by a clutch that slides up and down on the upright support. Using this clutch, this section can be placed at any angle, and at any height up to six feet. From the lower edge of this section falls a curtain screen that can be moved horizontally, as shown in some of the illustrations. Fastened from the top of the middle section is another screen of the same size that can be moved horizontally the same as the lower one, and also extended out over the sitter as shown in the illustration herewith. This latter position is very useful in the case of bald heads, light hair, large white feathers, line lightings, and other cases that the operator will soon learn to recognize.

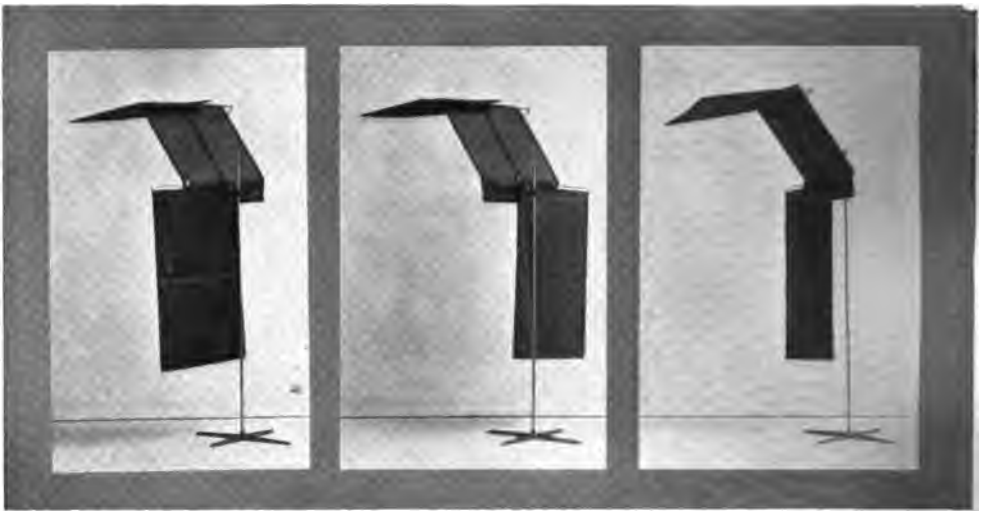

Showing various adjustments by shifting horizontally.

The light under which these illus-

Without controller. With controller.

Without controller. Treatment of white drapery. With controller.

Without controller. Treatment of shoulders. With controller.

trations were made is eighteen feet wide. It starts two feet from the floor, runs straight up five feet as a side light, and then twelve feet as a top light at an angle of 45 degrees. It is all ground glass except a strip of clear glass, three feet wide, along bottom of top light. The side light was wide open. The top light had five curtains. The last curtain on the top, that is, the one farthest away from the subject, was open, the next down to about ten feet of side light, the next to about eight feet, and the rest down to about four feet. The height of the Controller screen is determined by the entrance of direct light; higher or lower, as case may be. The two white strips on the floor are placed to show the position of the sitter in relation to the light, one being parallel to the light and the other at right angles, forming a cross.

Without controller. Treatment of line lighting. With controller.

A sheet of white paper was placed in the position of the camera when the portraits were made. It has, unfortunately, been trimmed partially off in two of the illustrations, but the corners shown will suffice.

Do not use the top section thrown forward and over the sitter, as shown in one of the illustrations, except when needed for bald heads and other cases as mentioned above. It can be removed if desired, but the best plan is to fold it back over the middle section, where it is always ready for use and runs no risk of becoming misplaced. (See the illustration showing treatment of shoulders.) So used, the holding back of the shoulders in low-neck dresses is accomplished, and keeping the strong light from the neck saves a lot of retouching. For line lighting, as shown, and for three-fourth figures, always use the Controller as near the subject as possible without getting it on the plate.

The reason the screens are made only twenty-four inches wide is to avoid shading the background and destroying the atmospheric effect in the pictures.

And using the Controller does not increase the exposure; in fact, it seems to shorten it, if anything. The shortening of the exposure is quite evident in cases where the desired lighting is secured with the Controller instead of by closing down the light. The case is entirely different when an ordinary opaque screen is brought between the sitter and the light. The light does not get around it to the same degree, the background is shaded and all atmosphere lost. Use your light, both top and side, well open, learn to use the Controller intelligently according to the light you are using, and I can assure you that there will be a vast improvement in the quality of your work and you will accomplish it with much more certainty and much less trouble than by any other means.

## SHOWING PROOFS

BY E. BELLE-OUDRY

It pays to show as many proofs as possible, especially with children.

Have your proofs segregated and held together with small wire clips. Stamp them on the back, with the price of extra positions. Be careful to stamp the same price on all the proofs of a sitter. If, for instance, you are delivering 8 by 10 proofs, and the retouching on the standing position is 75 cents extra, and the bust position $1.50, make them all $1.50. If you mark some $1.50 and others 75 cents, naturally the customer will only want to pay 75 cents, even if his order includes a bust position.

Here is where a saleswoman can make money for the business. Ask the customer to sit down before a table, sit down yourself, do not seem in a hurry, watch for the one they consider the best, then talk up the next best, saying that you think it equally as good though different, that they surely must have a few finished. Right here you will get the price for an extra position.

If there are a number of good proofs make an effort to get an order for a medley or strip, saying, "As the baby will never be so cunning again." Arrange the proofs as they would look the best on a card or strip, a sample of which you should have handy.

Now sum up. If the photographs are

$6.00 a dozen and you sell six single pictures and one strip of six positions, which makes one dozen in all, charge 50 cents for each extra position or $2.50 and $1.00 for setting up the strip. Have it understood that the amount will be $9.50, and write it on the back of the proof so as to enter it in the proper column of your register.

An understanding is absolutely necessary, and saves much time when delivering. There is nothing that will hurt a sale and future business like having things come up that the saleswoman did not clearly explain.

It is better not to mail proofs if you can help it. Have them call for them, as you will have a better chance to influence them.

In regard to returning proofs, no set rule can be made. Always try to sell a toned proof. Do not lose the good will of the customer by compelling him to return them, as many good orders have been given later due to the fact that they have kept them.

Never talk up a moved proof or one that will not finish well, as you will have trouble in delivering the picture. It would be better policy to have them re-sit. A customer after sitting for a dozen pictures will sometimes decide to take only half a dozen after seeing the proofs. To this person I would charge three-fourths of the price. This price is usually high enough to compel them to take the whole dozen as they first intended.

After working a customer to the limit you will often find that after they are away from your influence they regret and try to back out from the order given, often using the telephone. To such a person I would answer that the "order has gone through" and that it is out of your hands and in the work room.

It is materially impossible to give absolute satisfaction to every one. Some people are not satisfied with their face anyway, but you can guarantee first-class work. If you have to give a re-sitting, do it cheerfully. If any change in the apparel or the make-up of the hair is made you are certainly entitled to charge for the re-sitting, as in this case it is not the photographer's fault surely, but I would never antagonize the patron, especially if they pay a good price for their photographs. With cheap photographs you can hardly afford to give a re-sitting free.

You will at times be requested to save a negative that has not been ordered from. This will hardly be worth the while. Try to sell at least one print from that negative, saying that is the only way it will be saved.

## ON THE ACTION OF POTASSIUM BROMIDE USED IN DEVELOPERS FOR INCREASING CONTRAST IN THE DEVELOPED IMAGE

BY MESSRS. A. AND L. LUMIÈRE AND A. SEYEWETZ

It is of course well known that the addition of potassium bromide to developers produces, in varying degrees according to the developer employed, a retarding effect on the action of the developer, while increasing contrast in the developed image, within the limits defined in our previous study, as published in the *Bulletin de la Société Française de Photographie*, 1909.

Potassuim bromide is not regarded as the only substance capable of increasing contrast in the developed image; it is commonly supposed that this

property belongs not only to the various soluble bromides, but also to all substances which retard development. This theory has not, however, been made the subject of any decisive researches.

In the present study we have sought to elucidate the following points:

1. Is bromine the active and indispensable element in the manifestation of the above-mentioned phenomena, and can it exercise its action under any form in the state of a mineral or organic compound?

2. Are substances which contain no bromine, and which retard development, capable of producing the same effect as bromides on the contrasts of developed images?

3. Can the method of action of bromide in developers be deduced from the foregoing results?

For the purpose of ascertaining whether bromine is the active element in the action of potassium bromide on the contrasts of developed images we added to one of the developers most susceptible to the action of potassium bromide (hydroquinone), made up according to the following formula:

| | |
|---|---|
| Water . . . . . | 1000 c.c. |
| Anhydrous sulphite . | 25 grams. |
| Hydroquinone . . . | 10 grams. |
| Carbonate of potash . | 38 grams. |

and containing 0.24 grams of potassium bromide per 100 c.c., equimolecular quantities of the following bromides—quantities corresponding to the amount of potassium bromide producing the maximum contrast: sodium bromide, ammonium bromide, lithium bromide, calcium bromide, barium bromide, magnesium bromide.

All our tests were made as follows: Different plates were exposed under identical conditions by means of the Chapman-Jones sensitometric scale, and in such manner as to obtain in each case the appearance of the same sensitometer number. They were then developed comparatively with the test developer and with the same developer plus the various experimental substances. From the relative intensities of the faintest and strongest square we deduced the value of the contrasts of the image in each particular case.

All the soluble bromides gave similar results.

Hydrochromic acid and bromine water behaved in the same manner as the bromides.

The action of the *bromates* was slight, and could not be compared with that of the bromides; they had no effect on the image.

The action of the *hypobromates* is of no interest, as these substances do not exist in the pure state, and always contain bromides.

Among organic bromic compounds we experimented with *bromal* and *bromacetophenon*. These acted similarly to bromides, but probably under the influence of the alkali of the developer they partially saponify, giving alkaline bromides.

This appears to be confirmed by the fact that when added to a non-alkaline developer, such as diamidophenol, they are ineffective.

We also tested comparatively the action of the bromides and that of the other halogenic salts—chlorides, iodides, fluorides of potassium, of sodium, of ammonium and of lithium, used in equimolecular proportions corresponding with the quantity of potassium bromide giving the maximum effect. None of these salts increases contrast; the iodides even diminsh it, and during development transform the silver bromide into iodide, necessitating prolonged fixation.

Further, not only do these substances, unlike bromides, fail to remove the initial fog of the image, but certain of them increase it.

In a further series of experiments we tested the action of various retarding substances such as sulphates, ferrocyanide and ferricyanide of potassium, and potassium bichromate, also the action of acids.

None of the former increased the contrast of the developed image. The acids we experimented with were hydrochloric, hydrobromic, hydroiodic, nitric, sulphuric, phosphoric, citric, and tartaric, of which hydrobromic acid alone increased contrast, probably by forming bromides with the alkali or sulphite of the developer. The other acids retard development without appreciably increasing contrast. This also is the case with soda bisulphite. In the case of non-alkaline developers—diamidophenol, for example—a small quantity of 40 per cent. soda bisulphite (from 2 to 5 c.c. per 100 c.c. of developer) *accelerates* instead of retarding development, and produces, not an *increase*, but a *diminution* of contrast. With more than 5 c.c. of bisulphite the time of development increases with the quantity of bisulphite, and up to 15 c.c. of bisulphite per 100 c.c. of developer, contrast is accentuated, but to a much smaller extent than results from the addition of bromide.

If too little or too much bromide be added to diamidophenol developer, its effect is scarcely perceptible; this, doubtless, is the reason why the action of bromide on this developer was for long unrecognized. On the other hand, its effect is very marked when used in the proportion of between half and one gram of bromide per 100 c.c. of developer.

To sum up, the property possessed by potassium bromide of increasing contrast in the developed image is not common either to haloid salts or to other substances capable of retarding development.

The preceding experiments seem to indicate that this property is peculiar to bromine in the state of soluble bromide or to organic compounds capable of forming a bromide with the alkali of the developer. While not enabling the theory of the action of bromide on developers to be elucidated, these experiments lead to the supposition that this particular action of the soluble bromides may be due to the combinations which they may form with the insolated silver bromide, and which combinations may not be possible in the case of other soluble haloid salts.

Possibly these combinations are less easily reducible than the silver bromide itself under the influence of the developer, thus explaining the increase of contrast by the use of these substances.

## A SCOTTISH PHOTOGRAPHER IN AMERICA

[THE following interesting interview was given by Mr. William Crooke on his return home after a visit to this country, to a representative of the *British Journal of Photography*, from which we reprint. It is pleasant to note that two of the American photographers' characteristics are his hospitality and the fraternal spirit which prevades the profession here.—ED. W. P. M.]

Mr. William Crooke, Edinburgh, has just completed a tour in the United States of America. His position as a portrait photographer of note is such that anything that he might have to say on photography in the States is bound to be of much value. With the

view of getting his opinions, our special representative called on him at his studio in Edinburgh. The studio is situated in Princes Street. From the windows of the reception room a beautiful view is obtained of Edinburgh Castle, that "dream in masonry and living rock," and across the Princes Street Gardens to where the smoky houses of the Old Town look down on the magnificent thoroughfare of the Northern capital. The studios leading off the reception rooms are spacious and convenient, and contain many original features that owe their origin to Mr. Crooke's experience and artistic taste.

On the walls we see prints that have done their part in maintaining the Crooke fame. There is a majesty about all the pictures from these studios that is so prevailing that it might well be termed the dominant note in the scheme of Crooke harmony. Even childhood, when photographed by Mr. Crooke, assumes an aristocratic mien; one can hardly imagine him photographing a slum child and retaining the slum atmosphere.

We got Mr. Crooke, who was good enough to reserve an hour for our benefit, to tell the story of his tour, and we will endeavor to reproduce it, as far as may be, in his own words:

When we (Mr. Walter Barnett and myself) landed at New York, we were met at the quay by Colonel Marceau and Mr. B. J. Falk. We were introduced to many photographers, including Pirie Macdonald ("Photographer of Men"), whose work I remember seeing at an exhibition many years ago at Blairgowrie, when I was judging there.

An itinerary? Well, we went from New York to Baltimore, thence to Washington, St. Louis, Chicago, Indianapolis, and Rochester. At the latter place we were shown through the Kodak works, and afterward entertained to lunch by Mr. George Eastman in his palatial offices, where we had the pleasure of meeting all the heads of the departments.

At Washington, through the instrumentality of Mr. Harris, we were introduced to the President of the United States, Mr. Taft, and we found him a very interesting, affable personality.

At St. Louis we held an exhibition of our work. Mr. Barnett had over two hundred pictures, I had sixty of a large size. Yes, many people come to see the exhibition.

What seemed to strike the visitors most in your work? we asked.

The composite pictures (such as Edinburgh Town Council and those of the Merchant Company) seemed to tickle the professionals most; one man vouchsafed the remark that he had tried that class of work but found it exceedingly difficult. At the pressing requests of Mr. Rau, Philadelphia, I left my pictures with him, as he wanted to exhibit them at some of their famous congresses. No, I did not attend any of the congresses; I was there at the wrong time for them.

The folk we met were very hospitable —exceedingly so. Mr. Strauss was hospitality itself; he seemed unable to do enough for us, always devising some fresh idea for our entertainment or comfort. Mr. Cramer (St. Louis), of plate fame, gave a reception on the occasion of our visit, but it is impossible for me to mention all the names of kind hosts. We met photographers many; they think little of distances there, one man came a thousand miles to meet us.

There was a friendly little game they played that was new to me. You had a model placed at your disposal; there were ten of us in the game, ten minutes being allowed to each. I was unable to work up any enthusiasm in the business, and only took three

negatives; but how some of these fellows did get ahead! What with changes of dress, and immediate exposures following, the model had a busy time. I will not tell you how many plates the record man exposed, because I know you won't believe me, and I have no ambition to earn an undeserved reputation for romancing.

The photographers seem to associate more with one another than they do here. Here, unfortunately, photographers resident in the same town frequently display feelings toward each other that can hardly be termed affectionate. There they appear to have more of the sociable spirit; of course, I cannot say whether it is real and earnest, or whether it is merely the style of the country—but it was good to see.

There was one man I met who interested me greatly—a wonderful man—Rau, the official photographer for the Pennsylvania Railway; he does huge panoramic prints, say, six feet by two. These are direct prints from film negatives, taken in an immense panoram camera. He is a man of great ingenuity, and I was privileged to see his apparatus, all ingeniously conceived, much of it specially made, to meet his own special requirements. I also saw a print from a negative he had recently taken of the new front of Washington Railway Station, where the minutest details of the building were really microscopically rendered.

The professional in America does not seem to bother so much about a great variety of processes as we do here. Artura, Cyko, and other development papers, generally used with an "art" surface, are the favorites, and they turn out very pleasing work with them. We met one professional, however, who does all his work in bi-gum—no other process; if his bi-gum does not please you, then you must go elsewhere. Of course, his clientele is distinctly a better-class one, and he gets good prices for his work. Goldensky, Philadelphia, is the bi-gum man; he turns out good work, varied in treatment, each picture being separately considered according to the subject.

There are more people photographed in America than here—there is no question of that. For instance, in Princes Street here we have six photographers—there used to be more, but they are now reduced to that number; in Fifth Avenue, New York, there must be at least sixty photographers. If the Americans did not get their photographs oftener taken than our Scots do, how could all these professionals live?

Our people are slow to be photographed and pass away off the face of the earth without any portrait left behind; except, perhaps, a snapshot taken by some friend in the backyard, up against the henhouse—that is taken to some long-suffering professional, and he is asked to try and make something of it.

What means do the Americans take to pull business?

The methods are many; the main idea seems to be to get the client inside the studio. In many instances cash is not even mentioned until after the exposures. There, as here, the "invitation" trouble is present. Here, for instance, if a man receives any title, say even J. P., that is made an excuse for a photographer to come down from London, ostensibly to photograph the new dignitary. He gets into the dignitary's house, photographs *him* for nothing, persuades his victim's wife or daughter to get photographed; and the probability is that that pays all the expense of the journey. This deprives the local man of work he might otherwise get, and makes the entry into these "worth-entering" houses more difficult.

It is against human nature to pay for what you can get for nothing.

What about the American professional's methods?

Well, they are somewhat different from here; there's an independent sort of spirit in the air, that probably excuses what would not be tolerated here. Here the photographer must be well groomed, and what we term "gentlemanly" (using the word in this restricted sense) in his appearance. Over there the photographer—and I allude to some members in the higher planes of the profession—appear clad in trousers and shirt, and in that attentuated costume they do their work. If you allude to their appearance, they will reply, "Well, if they don't want me this way, I guess they can do without me." I had almost omitted to point out that in addition to that costume there is frequently added a big cigar.

Do they make money?

Well, they get good prices, and seem to have no scarcity of cash. Many of them keep their own motor-cars, and that is not done with an empty exchequer. Their average earnings? No, I do not know that; I did not ask; it would have been a trifle too inquisitive to have asked that—don't you think so?

The studios are mostly of the single slant construction, many of them with only a big side window. There are few span-roof studios, at least, I saw few. They seem to depend little on nominal top light. The side light will be about ten feet high, while with us it frequently terminates at seven feet. The height of the side window, as you can see, does away with much of the need for a strictly top light.

The studio contains many accessory dodges; they are not afraid to use anything new. I was particularly struck with the very good methods of holding backgrounds—they are inventors and ever ready to take advantage of any new invention. One time-saving plan I noticed—a photographer will have a great stock of dark slides, perhaps as many as fifty; these are filled in the morning, and they never think of going to the dark room during the day to change plates; all the work is done with these plates filled in in the morning. Another item I noticed was that they go to a great deal of trouble in treating the negative; the background is frequently "illuminated," and so worked on that there is often little or no resemblance between the finished print and the original negative.

We had, however, exhausted Mr. Crooke's time, and, a sitter being in waiting, we left, convinced that the reputation of the profession in these islands had suffered nought by Mr. Crooke's visit to the Land of the Stars and Stripes; and confident that his tour would have intensified any good opinion the American had of the work of the British professional.

## SIGNS ALONG BROADWAY

[VERY rapid advances have been made in the making of night pictures. The New York Edison Company get out a very attractive monthly magazine —*The Edison Monthly*—to advertise the many uses of its product. It naturally has to depend on artificial light pictures for its illustrations. The following article and illustrations reproduced from the magazine show that very effective pictures can be made. The company keeps a staff of three or

four photographers busy making photographs for advertising purposes.—Ed. W. P. M.]

It was a group of American tourists who, after many weeks in rural England and murky London, crossed the channel to Brussels. They reached the city just as the lights were being turned on.

Suddenly the tourists turned and fell upon each other's necks. "Oh, those are the first real lights we've seen in Europe," exclaimed one, while an unsentimental business man added, "It makes me homesick, it reminds me of Broadway."

Although thoroughly esthetic people may deplore its brilliancy and prefer shaded lights and pastel tints, what would Broadway be without gorgeous arcs and dazzling signs which pervade the amusement district? Critics may deplore the eccentricities of certain innovations, designed to catch the eyes of the throng, but only the wholly prejudiced could fail to see a garish sort of beauty in the entire aspect. Whether it be Emersonian or not, it is "what the public wants."

Conspicuous among the glare of lights are the signs, of as many kinds as the classes of amusement offer. There are theatre signs, restaurant

signs, displays several hundred feet from the pavement proclaiming the virtues of anything from sewing silk to motor-cars. Not a few of these present elaborate workmanship, but also a careful study of the psychology of attraction.

Never before has the Great White Way been as dazzling as it is now, and never before have contracts in lighting been worked out so carefully. This is due largely to the use of low voltage tungsten lamps, which give a clear white, while the older carbon bulb appears yellow in comparison. Because the ordinary tungsten sign lamp gives twice the illumination of the usual two-candle carbon, while consuming about one-third of the current, sign owners feel free to order more light than ever before.

Meanwhile other improvements have been made. The sign which at night, lit and glowing, has a beauty all its own, by day may be anything but a delight to the eye. To meet this difficulty, there is the arrangement in effect not unlike the old trundle bed. By day, the sign is neatly folded against the wall where it neither takes up space nor obstructs the view.

## NEWS OF THE NATIONAL CONVENTION

Go to, thou foolish one! Thou wouldst fain be wise in thine own wisdom, yet knoweth not that wisdom cometh from without, and that others too have wisdom which they would gladly impart unto thee, wouldst thou only be a seeker thereof. Wherefore was invented the Convention.

Getting down to the vernacular, did you ever stop to think that the National Convention as it is today is the sum total of the labors of innumerable broad-minded men who, without thought for themselves or the time and money (which, after all, is the same thing) which they have expended, have worked hard to bring about a better condition of affairs in professional photography? Who have taught what they knew so that those less gifted or less fortunately situated might know what they knew? Lots of us have got into the habit of thinking that the conventions are run for the personal aggrandizement of a few men who run away with the honors and glory. But really there is mighty little honor for those who conduct the affairs of the National and an awful lot of hard work. Get this firmly fixed into your mind—that the National Convention is conducted solely for the benefit of those who make their living at photography, not only for the few, but for every man jack, whether he live in Alaska or out on the Florida Keys (if there are any photographers there). And the influence of the Convention is felt throughout the country even though it be attended only by those within a thousand-mile radius.

The Convention of the P. A. of A. could never have lived through thirty-one years, growing stronger and better all the time, if it had not had real purpose and sincerity and usefulness back of it.

In the St. Paul Convention you have not only the efforts put forward by this year's board, but the result of the efforts of all previous boards. That is why you get the very cream of everything worth having at this Convention. The School of Photography has progressed step by step in excellence until this year you will have the master

photographer of the world to teach you.

Rudolf Dührkoop's work has been more frequently shown in this country than that even of our own leaders. Abroad he is universally acknowledged. It is saying much for the reputation of our National Association that Dührkoop consented to make that long trip across the water to show us how he achieves his successes. And Dührkoop is modest. He claims that he has "nothing on" our American photographers—merely that he does these things in a different way. But it is that different way that we all want to learn and that he is going to be here to teach us.

But Dührkoop's lessons will only be a small part of the total endeavor. You will come to see him, of course, but you will see other attractions every bit as interesting and instructive. Leslie Miller, the director of the most successful school of industrial art in the country, will talk to you about portraiture, sane portraiture, and will show you the lessons to be learned from the old masters, illustrating his remarks by slides. Mr. Williams, the President of the Royal Society of Miniature Painters of Great Britain, will be another whose talk will be along the art side of our business, and rumor says that he is a most gifted man and teacher.

Our own William H. Rau, of Philadelphia, ex-President of the Pennsylvania Society, will lecture on his experiences as a commercial photographer. Everybody knows that Rau has the finest plant of all for the making of photographs of everything under the sun. He has been all over the world, making pictures. The wonderful station of the Pennsylvania Railroad in New York is decorated with monster transparencies, the work of Rau. And he, too, will illustrate his talk and it will be mightily interesting to all photographers, not only to the commercial men. You will be shown, too, how to advertise successfully. Advertising is the very breath of modern business and an illustrated talk on this subject will give you many a pointer.

Little use to talk about the exhibition of pictures. You all know that it is the show of the year, that by it reputations fall and rise. There will be no prizes, of course, and so no jealousy.

National Convention entertainments are handled on a big scale and there will be no lack of them this year. The Twin City photographers have worked hard to accumulate funds for the purpose and are going to do themselves proud.

The women photographers of the country are taking a serious interest in their own Federation of Women Photographers, and they will be there in great numbers, with an exhibition which will make many of the men sit up and think hard.

The Congress of Photography will call together the thinkers of the profession. Many weighty problems are up before them this year and their meetings will be unusually interesting. The Academy of Photography, too, will be a matter that will come before the Convention this year. Every thinking photographer must be intensely interested in the accomplishment of its foundation on a fair, impartial, but solid basis.

After the Convention, if you are so minded, you can take that trip to the Yellowstone Park, where all the wonders of nature seem to have been accumulated. It is to be a special trip for photographers and the expense is small in comparison to the enjoyment. You may never have such a chance again, so think that over, too.

The manufacturers will have the finest display ever shown. That sounds big, but wait till you see the exhibition

hall. The National Convention has been held in many fine buildings, but never in one so admirably suited to its purposes as the St. Paul Armory. And the manufacturers are going to take advantage of that.

So don't consider distance or expense or time. Just make up your mind to it that you are going to St. Paul in July, and that you are going to make the most of your opportunities. 'Tis going to be big money in your pocket. And did you ever stop to think that the big men in professional photography have all been good convention men? There's a moral in that.

## TO THE WOMAN PHOTOGRAPHER

### Greetings from the Officers and Chairman of the Women's Federation of the P. A. of A.

THE success of last year's work will not carry us through this year unless we create new interest. We must uphold the feeling of goodfellowship established. It is time to be making exhibition pictures which will add fame to the skilful exhibitor and to our Federation. We ask you to affiliate with us and become a part of our organization. Each woman photographer should resolve firmly to send to St. Paul, next July, the three best prints she has produced during the year—as an encouragement to others, a credit to herself, and for the honor of her profession. Be alive!

Most cordially yours,

MARY CARNELL,
President.

1314 CHESTNUT STREET, PHILADELPHIA, PA.

It is time, fellow-member of the Federation, that you were thinking of that fine exhibit you are going to send for the women's display at the National this year. In fact it is time that you were getting it ready.

Now don't be selfish and not send one; as far as you are individually concerned that will make our exhibit a failure.

Don't be dilatory, thinking there is plenty of time; time flies.

Finally don't be humble, thinking your work not good enough, Compared with our ideals, none of our work is good enough. Do your best and do it *now*. Later if you have bettered this best, send that instead of what is now your best.

Do *your* part, each and every one, and the Federation will surpass its splendid exhibit of last year.

Yours fraternally,

BELLE JOHNSON,
First Vice-President.

MONROE CITY, MO.

The Women's Federation of the Photographers is striving more each year to help others who are in the profession, as well as themselves. Are you a member of this association? Why not join and receive the benefits which we derive from association, the exchange of ideas and seeing the work of others. We will welcome you cordially.

Yours sincerely,

BESSIE L. MEISER,
Second Vice-President.

111 N. NINTH STREET, RICHMOND, IND.

Are you a member of the Women's Federation of the P. A. of A.? If not, why not? Within the past six months this organization has doubled its membership list, which fact alone speaks well for the work that it is doing.

If you are interested in your work and want to become still more inter-

ested, why not learn what other women are doing in your profession. See their work, learn their ideas, get in touch with them through the Federation.

If you are not already a member, join now and begin to get ready for the coming Convention.

The yearly dues are only fifty cents, which sum also includes the Circle membership. Any further information will be gladly given.

MAYBELLE GOODLANDER,
Secretary-Treasurer.
409 E. MAIN STREET, MUNCIE, IND.

Not only because there has to be a woman in the case, but because the Federation offers opportunity for advancement to all women of our profession, it is worthy of your consideration. Coöperation is optional, but progression is necessary to the life and recognition of photography. Make sure of your place by knowing what your neighbor is doing; be practical, businesslike, and always womanly, and "The World is Ours."

The Federation has come to stay. Will you share its privileges, know personally its earnest supporters, and make pictures with a clear conscience? Aided of course by God's sunshine or any other light which is available.

KATHERINE JAMIESON,
Chairman Eastern Section.
126 S. HIGHLAND AVE., PITTSBURG, PA.

*To the Women Photographers:*

Knowing the benefits I have received as a member of the Women's Federation, I am anxious that all women in my profession should receive the same and insist upon you becoming members of this organization.

By working alone we get discouraged and often indifferent. We need the inspiration, sympathy, and coöperation of other workers in our line, as well as practical suggestions in every phase of the business.

In this organization we meet many of the leading women photographers. We find them earnest workers, broad-minded, kind, and helpful. Coming in contact with those who have been successful, we cannot help but improve.

We cannot afford to overlook this opportunity of associating and becoming acquainted with these workers. If you wish to improve let the Women's Federation help you.

Most sincerely yours,
MARY W. MILLER,
Chairman Middle-West Section.
MATTOON, ILL.

Could the women of the profession realize one-tenth of the benefit to be derived from attendance at the National and a union with the Federation, I predict there would be few stay-at-homes. For myself, it means getting away from my own little viewpoints—touching elbows with the big people, and driving me to fresh effort by a comparison of my work with that of the most representative.

I find I come away with new energy, new ideas, and new ideals. If *I*, why not *you?* Try it, 'tis worth the price.

BLANCHE REINAKE,
Chairman Southwest Section.
1029 OAK STREET, KANSAS CITY, MO.

We who met at Milwaukee last summer were impressed as never before with the importance of the new sisterhood. It is no longer necessary to prove that we can make pictures, nor does the fairminded persons doubt our ability to compete with business people. The professional world has accepted us because we built for ourselves a niche and proceeded at once to fill it.

Our greatest need today is unity for educational purposes, and the Women's Fedreation in supplying that need offers advantages that we cannot afford to ignore.

BESSIE W. THOMAS,
Chairman Northern Section.
SHELDON, IOWA.

## THE PROFESSIONAL PHOTOGRAPHERS' SOCIETY OF NEW YORK

*Buffalo Section, No. 6.*

THE Professional Photographers' Society of New York held a miniature convention on April 20 at Buffalo for the benefit of the photographers of Western New York, especially those who were unable to attend the annual State convention in New York. There was quite a large attendance and an interesting and instructive program was carried through.

Mr. Beach gave a practical demonstration of his method of posing, lighting, and negative making, by the aid of a specially arranged battery of tungsten lights. Mr. Mock also gave a demonstration under the skylight. Both demonstrations were much enjoyed and appreciated.

Dinner was served in the Palm Room of the Hotel Layafette. There were speeches and music and a general good time was had.

Those wonderful portraits from Germany, which were exhibited at the resent State Convention, were shown at the Studio of Harry A. Bliss, the President of the State Society. This splendid collection was assembled especially for this convention, by the famous Berlin photographer, Eduard Blum, and contains the best products of such eminent artists as Schwier, Dührkoop, Erfurth, Emmerich, Perschied, Gaedicke, Marie Louise Schmidt, Marie Boehm, and fifty others of equal standing in the profession.

*Metropolitan Section.*

The annual banquets of the Metropolitan Section in the past have always been a success; but the sixth annual dinner of the Section, which took place on April 20, 1911, at the Café des Beaux Arts has eclipsed anything in the line of a social feature since the organization of the Society.

The members present, with their wives and sweethearts, numbered over half a hundred, and it would have made President G. W. Harris feel good to see the dress suits which were the general order, but he was unable to be present, on account of being on a western trip. President Garo wired his regrets, and it was impossible for President Bliss to attend, on account of the Buffalo Section having their annual dinner on the same evening, so greetings were exchanged by telegraph between the Sections.

An excellent dinner was served. The dinner committee, Messrs. A. C. Kalt, Chas. Hallen, and Wm. P. S. Earle, decided that speechmaking be omitted, and high-class professional talent furnished the entertainment during and after the dinner. The cost of the dinner was three dollars per cover, and the professional talent was paid out of the treasury.

Good-cheer and good-fellowship prevailed, and among the songs was one containing the names of every one of our 57 members, which was composed by Mr. Earle, and sung to the tune of "Has Anybody Here Seen Kelly?"

The ladies were much pleased with the gold veil pins which were presented to them as souvenirs.

The members presented a beautiful solid gold watch, suitably engraved, to Chairman Bradley, to show their love for the man and appreciation for his very successful administration of the Section during the past year. Every one enjoyed the genuine surprise which it caused Chairman Bradley. The presentation speech was made by Mr. Oliver Lippincott.

Another officer who was agreeably surprised was the Secretary-Treasurer, A. C. Kalt, being presented by the members with a solid gold monogram ring; the presentation being made by the guest of the evening, Ex-President Rau, of the Pennsylvania Society.

ALEXANDER C. KALT,
Secretary.

## THE INDIANA ASSOCIATION OF PHOTOGRAPHERS

THE Diamond Medal offered by the Indiana Photographers' Association has been, since its inauguration, the highest honor any photographer could win in these United States. It has been looked up to by photographers in every section of the country as the one big prize of all convention offerings.

This Diamond Medal will again be competed for at the forthcoming sixteenth annual Indiana convention, to be held at the Daguerre Memorial Institute, the only home in the world devoted exclusively to photography, at Winona Lake, Ind., July 10 to 13. At the last convention visiting photographers were much surprised at the large number of pictures entered for competition. The indications are that this year will see a record number of entries. Already the number of entries exceed those of last year, and they are still coming in by each mail. You all know the standard of the work that has been shown in this class in the past, and I can assure you that the names of the exhibitors who have entered pictures this year certainly promise to keep up the standard of excellency that has always gone with the winner of a Diamond Medal. It was said of our last convention that the Diamond Medal class alone was better than some conventions.

Now, brother photographers, get that picture of yours ready, one is all that is required, as we want only your best effort. Send it to Winona Lake, Indiana, so that it will be there by July 6, and then start yourself, so that you will be there by the 10th to spend three days with us. I am sure that you will be more than repaid for your effort, as the Indiana boys are mapping out a business convention that will mean more money into the pocket of every one who attends.

In the next issue of this magazine you will find a more detailed report announcing the three first-class demonstrators who will show you how to work under the skylight. A new and better way of making enlarged pictures will be shown and many other ways of gathering in the dollars.

For further information concerning the Diamond Medal competition, address, F. K. Shalley, Secretary, Berne, Indiana.

## A PHOTOGRAPHER'S TRIP TO THE YELLOWSTONE PARK

WRITE of our trip to the Yellowstone? We can make the attempt, but it will not be adequate. We can put down *words* upon the *paper*, but how bring to the reader's mind the sights we saw, the thoughts we thought, the wonders that made us wonder? Ah! that no man can do.

We remember that week in the great Park as 604,800 seconds, more or less, of companionship with Nature as we never found her before. There in that place were assembled all the attractions about which artists rave and poets rhapsodize, plus allurements most fascinating and words most impossible of understanding. We felt that we were in the company of powers far mightier than man, and that it was granted us to see this thing as a privilege.

We read Dame Nature's *mind*. We thought her thoughts. It was given to us to penetrate the innermost recesses of her heart, and to commune with her as soul to soul; to feel "strange subtle stirrings," and to heed not the passing of the hours—the fading of twilight into night and of midnight into rosy morn. We wondered if it "took" everybody else in the same way?

Weeks afterward the jetting steam of a coffee urn in a basement cafeteria, or the puffing cloud from a factory pipe near our sixteenth-story window would bring back to us the geysers. The glories of a sunset across the city's housetops would recall to mind that glorious coloring of the canyon. We would live over again that precious, never-to-be-forgotten week when we walked on the top of the world, with our puny hands clasped in Nature's palm, and our finite hearts beating in unison with her infinite pulse.

Going again? Ah, yes! Read on and you shall see that it cannot be left with but *one* meager visit. We must come back to see those priceless sights again. We must come surely, inevitably, as comes the hart to cooling streams and as comes the moth to the candle's flame. We are counting the days till we shall again wheel up the hill and through the arch and into Wonderland.

Let us suppose we are three days' journey from home. Westward we have been whirled, in the comfortable Pullmans of the Northern Pacific, across Dakota and Montana, through the Bad Lands, and arriving at length at Livingstone, the Gateway of the Mountains. Here we take the Park branch line, which follows the course of the Yellowstone River, climbing steadily the Rockies, through wonderful and varied scenery to Gardner, a little town near the official entrance of the Yellowstone. Hurrying from the train, you note with pleasure the artistic log depot, so in keeping with its surroundings. You bless the taste and skill of the builders. Amid much confusion and bustle, find a seat in the great stage with its six prancing horses. A flourish and crack of the driver's whip and you are off. Off on a coaching trip of one hundred and sixty miles through the first and greatest National Park in the world! Off to enjoy the rarest specimens of Dame Nature's handiwork! Off on the long-dreamed-of trip through the Yellowstone! Off! Off! You sit in a daze and pinch yourself to be sure you are not dreaming. 'Tis fortunate no one speaks to you at that moment, or you would have disgraced yourself by tears, so great is your excitement and anticipation. The coach sweeps on through the impressive gateway built of lava blocks, at a cost of $10,000, and dedicated by Roosevelt in 1905. The long, smooth roadway beckons you on. The impetuous Gardiner River shouts you a welcome. Presently you pass a load of joyful returning tourists. All wave; one shouts, "Get your eyes open—you'll need them—you never dreamed what you'll see"—and such like admonitions as long as you are in ear-shot. By this time all in the coach have told from what state they hale, to what church they belong, what other celebrated journeys they have made, and sundry like confidences, until in an incredibly short time a most friendly footing has

been established. A typical Boston clergyman, who has secured the coveted front seat with the driver, occasionally turns round and announces in a sonorous voice bits of information for our enlightenment. The Park he declares to be about half as large as the State of Massachusetts, extending sixty-two miles north and south by fifty-four miles east and west. Recently two forest reserves have been added, more than doubling its original area. Until forty years ago nothing was known of its curiosities save a few floating rumors. In that year, 1870, it was explored by a small party of soldiers and scientists under General Washburn. The report of this party and the untiring efforts of some of its members led, two years later, to the setting aside of this region by Congress as a public park for the benefit and enjoyment of the people for all time. The government has entire control and recently spent more than a million dollars on roads and improvements. United States cavalrymen are everywhere, patrolling the woods, protecting the game, and preventing spoliation. Presently we swing up to the long veranda of our first hotel. 'Tis a pleasant surprise to find all the conveniences and comforts of civilization in this remote wilderness. Here you don your park outfit of sweater and boots; deposit your valuables in the hotel safe, shake off the restraints and cares of modern life, and resolve to thoroughtly see the Park and enter fully into its wild spirit.

(To be continued.)

## TRADE NOTES

Our readers should note that an "engraver's proof," suitable for framing, of the large double sheet of photographic celebrities, to be found elsewhere in this issue, can be obtained from the American Photo Text-Book Co., 360 Adams Avenue, Scranton, Pa. It is a veritable hall of fame and congress of photography combined.

---

Two New Dry Plates.—During the past month two new dry plates have been marketed by the Defender Dry Plate Company—the Defender Orthochromatic and the Defender Non-Halation. Both of these plates are offered to the public only after rigid tests have proved them to be of first quality in every respect. The Orthochromatic plates are extremely sensitive to yellow and green, and will give a nearer correct rendering of all colored objects than will the usual plates. The Non-Halation plates possess the same properties as the Orthochromatic, and in addition completely prevent halation, thus giving even better rendering than the Orthochromatic plates. The Non-Halation plates are double-coated—first with a slow emulsion of great opacity, second with a fast orthochromatic emulsion—and in developing the slow emulsion will add brilliancy to the negative produced by the fast emulsion.

The two new Defender plates indicate that this company intends eventually to place a complete line of dry plates on the market.

---

We congratulate G. L. Barrows, advertising manager for the Berlin Aniline Works, on the very attractive get-up of the Agfa advertisements. Each month's advertisement is headed with a seasonal drawing giving the keynote to the month's activities, changing from indoors to out-of-doors as the seasons advance. Changes are lightsome, and we all like pictures, which is one reason why the pictures advertising story is sure of attention. How many photographers stop to think of the number of good advertising ideas they can get from the advertising pages of a magazine? Advertising as a science has developed wonderfully within the last few years, as a glance through magazines of eight or ten years ago will show.

---

The Imperial Dry Plate Co., of England, has on the press a new handbook that promises to eclipse all previous handbooks put out by this well-known firm. Send your name to G. Gennert, 24 East Thirteenth Street, New York, U. S. agent for the Imperial Plates, and a copy will be mailed on publication.

---

To cut out halation, a backed plate is a necessity. The Imperial S. S. and Non-Fliter—imported by G. Gennert, New York and Chicago, are backed and sold at the same list price as the unbacked. Their use will save expense and annoyance, and you will do well to give them a trial.

---

High-class bromide enlargements are the specialty of F. G. Crowell & Co., 513 Harvester Building, Chicago. They are thoroughly well equipped for good enlarging and finishing,

especially in portraiture. To go to the other extreme, they also make fine miniatures on ivory or porcelain. They are prepared to carry out your instructions to the letter. Send for a copy of their catalog, and be prepared to talk to your customer about the desirability of a good enlargement or dainty miniature.

---

AN EXTRAORDINARY HANDBOOK FOR 1911.—The progressive spirit which has always characterized the Seneca Camera Manufacturing Co., of Rochester, N, Y., can be appreciated by camera users only by a careful perusal of the pages of the Seneca Handbook for 1911. In the first place, a glance at the cover of this book reveals the fact that the Seneca people value

very highly, and justly so, their idea of always featuring the Seneca Indian maiden. The Seneca catalog covers of the past few years have all illustrated an Indian scene in which the Seneca maiden is prominently posed. The series is lithographed in several pleasing colors, and the entire set is very unique and distinctive.

Their 1911 *Handbook* contains 76 pages of matter valuable to everyone interested in photography. It is rightfully called a textbook catalog, for it gives a comprehensive description of the newest and most improved photographic apparatus and furnishes helps for the amateur and technical news for the professional. It explains how to buy the right apparatus and how to use it to make photography pay. It is printed on an excellent quality of enamelled paper, so all illustrations are given their full value.

Every article illustrated is very fully and comprehensively described. Space will not permit of our giving a complete table of contents; but, to give the reader an idea of how valuable the book is, we would say that it illustrates and describes a complete line of cameras, from the box camera for the beginner's use to the very latest studio equipment, complete outfits, lenses, shutters, plates, photo papers, developing and printing outfits, and every accessory in the photographic line.

Every reader may have a copy sent to him free if he will but write to the Seneca Camera Manufacturing Co., Rochester, N. Y., and mention this publication.

---

A GOOD lens will double the efficiency of your hand camera, and the price need not be prohibitive. The Sylvar Lens is making good every claim made for it. A high-grade, symmetrical anastigmatic lens that is inexpensive. Your dealer can show it to you, or you can get one on free trial from the manufacturer, G. Gennert, New York and Chicago.

---

"WHAT'S in a name?" is an old question. "Tested E. K. Co. Chemicals" on a package or bottle is an absolute guarantee of purity, strength, and quality. You do not have to worry about the make-up of your chemicals when they bear this trade-mark. Specify by the name and insure your work. The Eastman Kodak Co. do all the investigating for you before they put their mark upon a package.

---

THE finest collection of background designs ever offered to the photographer is contained in a handsome new catalogue published by the Robey French Co., Boston, Mass. A copy will be sent on request. You never saw better backgrounds or a finer catalogue.

---

THERE was an obvious mix-up in the names placed under the row of the National Board of Officers in our last issue. The names should properly have read Harris, Larrimer, Townsend, Dozer, and Tyree—President, First and Second Vice-Presidents, Treasurer, and Secretary, respectively. The maker of the group was also incorrectly given as Golling, St. Paul, Minn. The photograph was made by Lee Brothers, of St. Paul, Minn.

# WILSON'S PHOTOGRAPHIC MAGAZINE

A MONTHLY MAGAZINE FOR PRACTICAL PHOTOGRAPHERS

Founded in 1864 by EDWARD L. WILSON
MRS. EDWARD L. WILSON, Publisher and Proprietor
L. WINIFRED WILSON AND T. DIXON TENNANT, Editors

EDWARD L. WILSON, 122 EAST TWENTY-FIFTH STREET, NEW YORK
*Entered at New York Post-office as Second-class Matter*

Yearly subscription in advance, United States and Mexico, $3.00; Canada, $3.25; Foreign Countries, $3.50. Single copies, 25 cents. Subscriptions begin with current issue unless otherwise ordered. Original manuscripts on photographic subjects are solicited, and, if accepted, will be paid for on publication.

## EDITORS' TABLE.

THE Free Public Library of Newark, N. J., held an interesting photographic exhibit, April 6 to May 4, showing a choice collection of prints by Gertrude Käsebier, A. L. Coburn, Clarence H. White, George H. Seeley, P. L. Anderson, W. E. MacNaughton, and students in the photographic departments, Teachers' College, Columbia University, and the Brooklyn Institute of Arts and Sciences. The exhibition was deservedly popular and attracted a considerable public attendance.

---

*Deutscher Camera Almanach.* A Year-Book of the Photography of Our Time. Edited by OTTO EWEL. Volume VII (1911), 225 pages, 146 illustrations. Price, $1.25. This well-known German annual is a unique volume in its way, and contains a profusion of clever articles on subjects photographic and a great number of splendid illustrations, including a fine assortment of portraits which would repay close study by professional photographers. Those who had the pleasure of seeing the German exhibit at the New York State Convention in February, know how good the average German portraiture is at the present time. The book contains a summary of the advances of photography in 1910, and descriptions of novelties in apparatus and materials.

---

WITH the National Convention at St. Paul this year, an unusual opportunity is offered photographers to visit the world-famed Yellowstone Park. The Northern Pacific Railway have made very special arrangements for a personally conducted trip through the Park immediately after the close of the Convention.

A special train will be run if there are 125 people, and will consist of one of the famous Northern Pacific dining cars, standard drawing-room sleeping cars, observation parlor car with smoking rooms, bath, barber shop, and library, making in all one of the finest trains on wheels.

If there are less than 125 passengers the party will be handled in extra equipment on regular trains on practically the same schedule as shown below. In case this is necessary, it will not affect the superior service outlined for the special train.

In Yellowstone National Park the party will be handled in special four and six-horse stage coaches, in charge of competent drivers and guides. The very best accommodations will be provided at the excellent hotels in the Park. All arrangements for the comfort and entertainment of the party will be completed before the train leaves the Twin Cities, so there will be absolutely no loss of time or annoying details to be looked after, enabling them to devote their entire time to viewing the Yellowstone Park. On arrival at each of the Yellowstone Park Hotels it will be found the conductor has arrived in advance and that he has registered the party. Passengers will point out their baggage and go at once to their rooms.

Attention is particularly directed to the "Limited Party" and "Specially Conducted" feature of this tour. The number will be limited to 125 passengers, and the party will be accompanied during the entire trip by a representative of the Northern Pacific Railway.

In order to insure accommodations, write at once to Mr. A. M. Cleland, General Passenger Agent, Northern Pacific Railway, St. Paul, Minn., stating the number in your party, the accommodations desired in sleeping cars, whether upper or lower berths, sections, or drawing rooms; accommodations desired in the way of rooms at the hotels in the Yellowstone Park, whether on ground floor, second floor, or third floor. Also give the exact personnel of your party and the manner in which you prefer to be berthed in sleeping cars and roomed in hotels.

The train leaves St. Paul at 10 P.M. on Saturday, July 29, and is due back in St. Paul at 7 A.M. Tuesday, August 8. The cost of the entire trip, including railroad fare, sleepers, drawing-room accommodation, meals, first-class hotels in the Park, and coach drives, is only $105.65.

In connection with this trip the Northern Pacific Railroad Co. offer attractive cash prizes for the best series of ten photographs, so that you have a chance of taking the trip and making it pay for itself.

JOHN WILLIAM DRAPER
First Portrait Photographer

BORN MAY 5, 1811 DIED JANUARY 4, 1882
Made First Portrait, 1839

# WILSON'S PHOTOGRAPHIC MAGAZINE

FOUNDED IN 1864 BY EDWARD L. WILSON

VOL. XLVIII JUNE, 1911 No. 654

## A VACATION SCHOOL FOR PHOTOGRAPHERS

In photography there is never a time when the photographer can say: "I know it all and have no need to learn more." The photographer with a desire to know more can learn every day.

In no profession or business are there more opportunities for gaining help and information than in photography. Every manufacturer of plates, paper, cameras, etc. maintains a staff of demonstrators who are at the service of the photographer. The Eastman School of Photography is an example of the thoroughness to which the instruction of photographers in the practice of their art has been brought.

The highest development of combining pleasure and instruction is to be found in the latter-day photographic convention.

Consider for a moment the forthcoming National Convention to be held in St. Paul in the last week of July. Under one vast roof the photographer will be able to enjoy a magnificent exhibition of photographs showing the finest work that is being produced today. He will see in the manufacturers' exhibits the latest and best in apparatus and supplies; he will meet the people who invent and produce the things for his everyday use. He will have an opportunity of taking a course of instruction in practical picture-making, and his instructors will be the leading men in the profession under the direction of Rudolph Dührkoop, one of the most gifted and popular professional workers. Prominent lecturers on subjects of vital interest to the photographer will condense into a short talk the results of much research and preparation.

In one week the photographer will be able to gather more help and inspiration by means of coöperation than he could get by a year's unaided effort. Not only will he learn much, he will have the opportunity to enjoy much. He will meet and mix with photographers from all parts of the country. He will learn that his fellow craftsmen are not his deadly enemies and hated rivals. He will discover that much more can be done for the betterment of the profession by concerted action than by the ineffective struggles of individuals.

July is a vacation month, and the photographer needs a vacation as much as anyone. If he can take a vacation and learn some things about his profession that are good for him to know he is fortunate.

Go to St. Paul, take in every feature of this great convention. Take in and give out. Listen to the other man; tell him what you know. Be a mixer. Keep your eyes and ears open. After the convention join the special party of photographers and visit the Yellowstone Park and have the time of your life. You will come home a better photographer and a bigger man.

## FULL PROGRAM OF THE NATIONAL CONVENTION—ST. PAUL, JULY 24-29

THE program for the National Convention has been definitely arranged now, and we can promise those who make the trip to St. Paul not only an ample return for their outlay, but one of the most enjoyable conventions ever held by the P. A. of A.

Not only will there be lectures both on art and business topics of an unusual order, not only will there be the much heralded school of photography, conducted by Rudolf Dührkoop and his daughter, but even the manufacturers are said to be preparing for an unusual number of demonstrations and much new apparatus will be shown for the first time. Then, too, besides the Exhibition, the leading plate and paper manufacturers will show a tremendous number of pictures of a very high order, their representatives having travelled the country over to obtain negatives of superior excellence and attractiveness. The method of display to be employed in the manufacturers' hall will add to the beauty of the scene; altogether, the 1911 Convention promises to rank high above those of past years and to be remembered for years to come.

On Tuesday, Wednesday, and Thursday afternoons, Rudolf Dührkoop will demonstrate in the lecture hall. Models will be used and it is promised to have the negatives and prints from them on view each day following. President Harris has made arrangements with the various manufacturers of plates and papers so that there will be no hitch in this. All the leading plate makers have placed demonstrators at Mr. Dührkoop's disposal according to a set schedule, and with trade demonstrators attending to the getting out of the prints we may look for them each day as promised. This promise has been made so often that we have begun to get a little shy of it, but we really do believe the promise will be kept this year.

On Wednesday morning, Mr. J. C. Abel will give an illustrated lecture on Studio Advertising. He will show specimens of good and bad advertisements and give comments on them, besides giving a few brief instructions as to the way to get the best results for money spent in advertising. Then he will give a brief talk on the various factors that go to make success in the photographic business, illustrating his talk with a huge diagram. This part of his lecture is one that not one of us can afford to ignore, for he shows in logical fashion every element that is necessary to a successful life career, and how intimately each element is connected with all the others.

On Wednesday evening, Mr. Alyn Williams, President of the Royal Society of Miniature Painters of Great Britain, R.B.A., A.R.C.A., etc., will lecture on

"A Painter's Views upon the Different Forms of Composition and Light and Shade as Applied to Photography," illustrated with lantern slide reproductions of the works of great artists of all times and of prominent photographers. This lecture will be exceedingly instructive, and will prove a great treat to the members.

On Thursday morning, Mrs. Nina Stevens, of Toledo, an authority on art and art criticism, and wife of G. W. Stevens, the director of the Toledo Museum of Art, will give a lecture that is primarily for the Federation of Women Photographers, but open to all members of the Association as well. Mrs. Stevens has a most attractive personality and is sure of a big audience.

On Thursday evening, Mr. Leslie W. Miller, principal of the Pennsylvania Museum and School of Industrial Art, will lecture on "Some Lessons for Photographers from the Great Masters of Painting." His talk will be well illustrated by some fifty or sixty slides, many of them colored.

Following his lecture will come an illustrated talk on the Yellowstone Park with reference to the excursion to the Yellowstone which will follow the Convention.

On Friday morning, preceding the election of officers, there will be a lecture by William H. Rau, of Philadelphia, on "Commercial Photography and its Possibilities." This lecture is designed to attract the commercial men who previous to this Convention have had but little attention paid to them. Mr. Rau's experiences as a commercial photographer have been unequalled and he is easily the leader in this country in that branch of the photographic profession. A number of Mr. Rau's beautiful slides will help to make his talk even more interesting.

There will be entertainments on Monday, Tuesday, and Friday evenings, and Friday afternoon, and it's "enough said" when we say that the entertainments are in the hands of a committee of photographers from the Twin Cities. St. Paul and Minneapolis hospitality is proverbial.

In the picture exhibition, aside from the strong showing that will be made by American photographers, there will be a very extensive and high grade collection of pictures which is being gathered by Mr. Dührkoop especially for this Convention. In addition, and in order to show our professional men the wonderful achievements of the leading amateurs, there will be a selection of framed pictures, including works of Photo-Secessionists and other well-known amateur photographers, from the private collection of William H. Rau, of Philadelphia.

Altogether, it is going to be a most unusual affair, and bound to attract an enormous attendance.

The following telegrams of welcome from the Governor and Mayor speak for the interest shown in the Convention by the State of Minnesota and the City of Saint Paul:

DEAR SIR: I wish to join in the invitation already given the Photographers' Association of America to meet in St. Paul during the week of July 24 and to assure the members of that organization that they have chosen an ideal location for this gathering. The Twin Cities are surrounded by both natural and artificial beauties which place them in a class by themselves from the artistic standpoint. You may rest assured of most cordial welcome from all our people.

Yours very truly,
A. O. EBERHART,
Governor.

And this letter from the Mayor of St. Paul:

DEAR SIR: It will give me great pleasure to welcome to St. Paul as many members of the Photographers' Association of America as can be induced to attend your Thirty-first Annual Convention.

There is no more desirable city during the

summer season to visit than St. Paul. With our many lakes and summer resorts we are peculiarly well situated for entertaining our friends, and St. Paul's hospitality has become a by-word among those who know our city.

Through your well-known publication it gives me special pleasure to invite the Photographers' Association of America to make St. Paul their objective point this summer, and I hope the prospective Convention will be the largest and best ever held.

Very truly yours,
HERBERT P. KELLER,
Mayor of St. Paul.

## WHY A CONGRESS?

To all of us who were fortunate enough to participate in the sessions of the Congress of Photography at Milwaukee, further questions of intents and purposes would seem superfluous. But I have been asked to furnish the Photographic Press with an article relating to the Congress, and this is the way it looks to me: The Congress, composed as it is of elected representatives from all of the minor associations, must prove a strong factor for safety. It is natural to presume that these delegates are the best available timber in the association, and competent to analyze any proposition that may be brought before them and reach the proper conclusions.

We all know that some ill-advised motions have passed on the Convention floor because of lack of deliberation and understanding on the part of members of the Association, and by bringing questions effecting our welfare before the Congress we may reasonably expect better results in legislation.

Now the State associations affiliating with the Congress will receive even more benefit, for they are then an integral part of the Photographers' Association of America. Then there is the material benefit in the saving of initiation fees and the difference in the annual dues, all of which is explained in the Constitution.

This year, at St. Paul, there will be many questions of vital importance brought before the Congress that may lead to great results. In the matter of selecting meeting places, we must realize the possibility that sufficient votes might be secured on the floor of the Convention to hold the meeting in the same section of the country indefinitely. This is surely a dangerous condition and might sometime result in the disruption of the Photographers' Association of America. For a remedy, we propose a line dividing the East from the West, photographically speaking, together with an amendment to the Constitution providing that annual meetings shall be held alternately each side of the line.

I trust that all delegates will give this their careful consideration and come to St. Paul, ready to carry the matter to a successful issue. Another question that might receive our attention is the proposed parcels post, or perhaps a special photographic rate. Express rates might be altered to our advantage. In fact, anything effecting the welfare of photographers may be discussed and recommendations made to the Photographers' Association of America for final action. The academy project, although it has passed from the hands of the Congress, may yet require further consideration by that body. While the Congress of Photography is only two years old, its work has proved so effective, and its power for good so great, that it is safe to predict wonderful achievements for the future.

BEN LARRIMER,
First Vice-President P. A. of A.

## THE INDIANA CONVENTION

Do you not think it would be a good idea to send an exhibit to Indiana this year?

The dates are July 10, 11, 12, 13, just two weeks prior to the National.

Indiana is again offering a beautiful "Diamond Medal of Honor," which is known the world over, as the best prize. "The most worth while" prize, that is given by any photographic society. This medal is a gift from the Daguerre Memorial Institute. The best picture will win this medal.

Beautifully designed "Certificates of Honor" will be given to all pictures that are chosen for Solon honors. Solon honors in Indiana mean as much or more than gold medals or cups in the average state exhibit.

We would urge you to make up your exhibit, and send it in plenty time. We assure you that it will be properly taken care of and returned to you in good condition.

Here's a good thought: Why not send your National Exhibit to Indiana first, which is two weeks prior to the National—*What say you?* Why not put two addresses on your box lid. One on the outside addressed to J. E. McLaine, Winona Lake, Ind., and the other inside to the National.

Why not kill two birds with one stone?

Get busy. Start your exhibit a few days sooner, and try for the "Diamond Medal of Honor." We promise you that your pictures will reach St. Paul in plenty time and in good condition.

What say you? Could you not arrange to be with us in person this year? I am sure that we Hoosiers will make your visit a pleasant one.

This year's meeting will be out of the ordinary. We have attempted one of the strongest programs ever attempted by a State Association. "*This Year's a Boomer.*" We did not have a meeting in 1910 on account of the nearness of the National at Milwaukee. But this year we are making up for the loss of 1910.

Its worth your trip to visit the Daguerre Memorial Institute, which is the only building erected by an association in memory of Daguerre, the founder of our great art.

The permanent exhibit of pictures, that have received Solon honors are worth going miles to see. This Solon is growing rapidly each year. If you are not represented—get busy.

This year the skylight room has been remodeled, light recurtained, new backgrounds, cameras, stands, lenses, groupers, posers, screens, light diffusers, and in fact every department has been equipped with every thing new and up-to-date—from a stirring rod to the most expensive lens. Everything that goes to make up a modern studio. All this belongs to the Indiana Association.

*Are you with us?* If not possible to be with us in person, send in your proxy—a nice exhibit—inclosing shipping orders, and we will do the rest.

Remember the dates, July 10, 11, 12, and 13.

Yours fraternally,

E. K. SHALLEY,
Secretary.

BERNE, INDIANA.

---

WHEN used with carbonate, instead of caustic alkali, hydroquinone acts more slowly, and is inclined to stain, but the gradation it gives is better.

As soon as the image has started developing, the plate is not nearly so sensitive to fogging by the dark-room light as it was before development commenced.

## CENTENARY OF DR. JOHN WILLIAM DRAPER, FIRST PORTRAIT PHOTOGRAPHER

WITH the celebration on May 5 of the centenary of Dr. John William Draper, the first person to make a photographic portrait of a human being, many "old New Yorkers," and other residents of this city not so old, will be getting out daguerreotypes of themselves, or of grandfather and grandmother, and taking mental jaunts back to the '40s and '50s, when lovers exchanged daguerreotypes, and families vied with each other in loading the center-table and the parlor mantelpiece with the pictures that made the family portrait painter feel there was no use for him.

Those were the good old days! There has never been a photograph made since the time of the daguerreotype, in spite of all kinds of newfangled ways, that could equal the daguerreotype's exquisite beauty, delicate minuteness, and charm of color. The daguerreotype was made to last forever, and, what is more, it told the truth and nothing but the truth, no matter whether the truth consisted of freckles, a crooked nose or superfluous hair. Whatever the human defect was it was there to stay, for no process of retouching made possible a "Before" and "After." The girl who said, "I mayn't be pretty but mother says I got the intellects in me," saw in a daguerreotype of herself nothing but her homeliness; for the photographer, or rather the daguerrean, or daguerreotyper, could not remove the freckles and substitute the "intellects." That feat remained for a later day.

Taking it all in all, those really were the good old days! When you went to have yourself daguerreotyped all you had to do was to dress according to several pages of directions, get your face whitewashed and sit for the third of an hour with your body and head screwed in a chair while the sun roasted you in a "skylight parlor" or the daguerreotyper's back yard. Of course, that was before a lot of improvements were made in the process, in the good old time.

When two old New Yorkers get together their reminiscences are bound to wander some time or other to daguerreotypes. "Now you are not to use our names or daguerreotypes," said one of two who got to "going it" when daguerreotype was mentioned, "because my daguerreotype seems—well, anyhow I don't think it was good of me at that time, even though I did get it taken at Brady's. I remember 'Brady's Famous National Gallery' as if it were yesterday when I got that old 'dag' taken. Brady first had his place in Fulton Street when it was one of the main business thoroughfares in New York. He also had a place in Brooklyn. Brady—why, everybody from the President and Daniel Webster down knew him—later moved from Fulton Street to Broadway, near Prince Street, and afterward had his 'gallery' at the corner of Broadway and Tenth Street."

"That's where I had this daguerreotype made," said the other old-timer. "I guess I was a pretty proud youngster at the time. I showed it to an old darky servant we had brought up from the South. He studied it for a little while and then burst out, 'Lawd bless me, if dat ain't *you*, young Massa.' I then explained to him what it was, asking him if he did not wish to have a daguerreotype of himself. 'Ah don't want one of dem dagger things made on me foh all dere is in heben, 'cause Ah's skeert at it.'"

In the little pile of framed daguerreotypes on the table was one of locket size showing a girl about twenty dressed in antebellum style. She was pretty, despite queer curls and ruffles. The old man who did not wish his name mentioned picked it up with a sad, faraway look. The other, seemingly knowing what was coming, started to talk about the crowds that used to go up to New York University, as his father had told him, to get their daguerreotypes taken by Dr. Draper and Prof. Morse, of telegraph fame. But the thoughts of the old man were not to be so easily changed. "I think you know about it, but somehow I can't get over her marrying somebody else when I see that little daguerreotype."

In 1839 people verily swarmed to the New York University building at Washington Square when it was announced that Dr. Draper, with a box, glass and chemicals, could make the likeness of a person. His process was based largely upon that of Louis Jacques Mandé Daguerre, whose invention for taking pictures of buildings, landscapes and other forms of "still life," it seemed to the inventor and others, could not be applied to living subjects. When Prof. Morse was in Paris in the summer of 1839, in the interests of his invention of the telegraph, he heard about the beautiful pictures that Daguerre was making by a secret process. In answer to Morse's question as to how he might get to see them, the American Consul, Robert Walsh, suggested that Morse invite M. Daguerre to see the telegraph apparatus, and the inventor of the daguerreotype would certainly return the courtesy.

The plan worked so well that Prof. Morse was asked to come at once to the Diorama, where Daguerre had his pictures. Morse was delighted with the views of Paris streets and boulevards, the Louvre and Notre Dame. The following day, while Daguerre was examining Morse's work, the Diorama, with all Daguerre's apparatus and pictures, was burned. But Daguerre soon replaced them and the French Government rewarded him for the investigations he had carried on for twenty years, a part of the time with M. Joseph Niepce, by granting an annual pension of 6000 francs. In consideration of this, Daguerre gave his process to the world, with the exception of England, where it had been patented.

Through the kindness of Daguerre, Prof. Morse, who had returned to New York, received full information of the daguerreotype process before it was published in the Paris journals. Prof. Morse and his two brothers, Sidney and Richard, began experimenting with the new art, as did also Dr. Draper. The Morses built a room with a glass roof on a building at the northwest corner of Nassau and Beekman Streets. This "palace of the sun," as they called it, was the first complete American home for daguerreotyping. Until this room was ready Prof. Morse conducted experiments in a room of the New York University building, and his first entirely successful picture was one of the Unitarian Church, taken from the window of a staircase on the third floor of the University after an exposure of fifteen minutes.

This was undoubtedly the first daguerreotype taken in America. The process was the same as that of Daguerre's. After a metal plate covered with silver iodide had been exposed in a photographic camera the plate was transferred to a dark room and exposed to the vapor of mercury, which developed the latent image, afterward made permanent by a solution of sodium chloride. The story is told that Daguerre discovered the part of the process connected with the "develop-

ing" by accident. One day he exposed a plate, but no image appeared. The next morning when Daguerre went to get the plate from a cupboard in which he had placed it he found a perfect image of the object before which the plate had been exposed. A lot of chemicals were in the cupboard, but by a process of elimination he found that vapor from the mercury had been the cause.

Dr. Draper, after studying the whole process, decided that it could be improved upon in some way to take pictures of anything living. His studies in chemistry and physics helped him greatly, and finally, working on the top floor of the New York University building, he made the first portrait of a person by a photographic process. The subject was his sister, Dorothy Catherine, and his camera was a cigar box fitted with a spectacle lens. Prof. Morse had failed to get any portraits of his daughter and her friends, although he had tried often.

Together he and Dr. Draper conducted a studio in the University building to accommodate the people who wanted to sit for daguerreotypes. The two professors felt justified in making charges for their work and for the lectures they gave concerning the process in order that they might be remunerated for the expense of their experiments. This was in 1840, and they took the daguerreotypes of many notables of the time, Dr. Draper operating the camera and Prof. Morse posing the sitters and attending to the artistic details.

In order to protect from the heat of the sun the person sitting for a daguerreotype, Dr. Draper used blue glass and a glass tank containing ammonia sulphate, by which the rays of the sun were intercepted. In writing about other requirements, he said: "The chair in which the sitter is placed has a staff at its back, terminating in an iron ring, which supports the head, so arranged as to have motion in directions to suit any stature and any attitude. By simply resting the back or the side of the head against this ring, it may be kept sufficiently still to allow the minutest marks on the face to be copied. The hands should never rest upon the chest, for the motion of respiration disturbs them so much as to make them of a thick and clumsy appearance, destroying also the representation of the veins on the back, which, if they are held motionless, are copied with surprising beauty. . . .

"The eye appears beautifully; the iris with sharpness, and the white dot of light upon it with such strength and so much reality and life as to surprise those who have never seen it before. Many are persuaded that the pencil of the painter has been secretly employed to give this finishing touch."

While Dr. Draper and Prof. Morse were busy with their daguerreotyping, Daguerre sent to this country M. Francois Gouraud to make his invention generally known. While in New York here he learned the process of portrait making from Dr. Draper. Among Gouraud's directions was this:

"The person, if a man, must be dressed in a clear gray coat; pantaloons of a little deeper hue; a vest of a fancy ground—yellow, orange, if possible—with figures of a color to make a contrast; the whiteness of the shirt contrasting with a cravat of a gray ground either a little less dark or more deep than the coat. The toilet of the lady should be of the same shades, and in all cases black must be constantly avoided, as well as green and red."

Here in the city Gouraud put on exhibition a large number of daguerreotypes made by Daguerre himself. They attracted a great deal of attention among the residents of New York

City and vicinity, eliciting great praise from all.

The newspapers and journals of the time joined in the general praise and gave long accounts of the pictures and the process of making them, in reply to demands of readers. Washington Irving's magazine, the *Knickerbocker*, has this to say as part of a two-page article:

"We have seen the views taken in Paris by the 'Daguerreotype,' and have no hesitation in avowing that they are the most remarkable objects of curiosity and admiration, in the arts, that we ever beheld. Their exquisite perfection almost transcends the bounds of sober belief. Let us endeavor to convey to the reader an impression of their character. Let him suppose himself standing in the middle of Broadway, with a looking glass held perpendicularly in his hand, in which is reflected the street, with all that therein is, for two or three miles, taking in the haziest distance. Then let him take the glass into the house, and find the impression of the entire view, in the softest light and shade, vividly retained upon its surface. This is the Daguerreotype!"

After an ecstatic description of the pictures was the following: "Busts, statues, curtains, pictures, are copied to the very life; and portraits are included, without the possibility of an incorrect likeness. Indeed, the Daguerreotype will never do for portrait painting. Its pictures are quite *too* natural, to please any other than most beautiful sitters. It has not the slightest knack at 'fancy-work.' Matthews used to sing in his 'Trip to Paris':

> Mrs. Grill is very ill!
> Nothing can improve her,
> Until she sees the "Tooleries,"
> And waddles through the Louvre.

"This was truthful satire in the great mime's day; but illness, with sea-voyage cures, must decline now; for who would throw up their business and their dinners on a voyage to see Paris or London, when one can sit in an apartment in New York, and look at the streets, the architectural wonders, and the busy life of each crowded metropolis?"

The general interest that was excited caused people to wish for daguerreotypes, and amateurs and regular daguerreans appeared all over the country. By the end of 1840 the methods were so improved that they justified practising daguerreotyping as a means of livelihood. A few daguerreotypes displayed at a door or in a window attracted eager spectators. "Studio wagons" reached those in the country districts and towns not supplied with "galleries."

At first nearly all daguerreotypes were taken by side windows. The first studio with a skylight was established at the corner of Broadway and Chambers Street, on the top of the Granite Building, and soon "skylight pictures" were features in the advertisements. The best known of New York daguerreotypers were Meade Brothers, Bogardus, Powelson, and Pickwell. Meade Brothers, as the firm called itself, had the most spacious galleries in New York on the second floor of the Astor House. They had the distinction of being the only daguerreotypers in the world to take a daguerreotype of Daguerre himself.

Along with Brady, Gurney enjoyed a national reputation, but Brady was the better known. Besides his "Famous National Gallery" in New York he had one on Pennsylvania Avenue, Washington, D. C. There Brady and his employees took daguerreotypes of men who were to play a prominent part in the Civil War. Brady was enterprising, and after the war had begun he sent out wagons that followed the troops.

American daguerreotypers were acknowledged to be the world's leaders. At the World's Fair in Paris, 1851, when they numbered over 10,000, the daguerreotypers of this country took the first prize with a remarkable exhibition. In England, France, and Germany the superiority of American daguerreotypers was acknowledged by advertisements of "the American process." The best daguerreotyper in London was an American, Mayal, and in Paris the same held true with Thompson.

The price of daguerreotypes varied from $1.50 to $15, according to the size and case. There was no extra charge for wax to keep wing-shaped ears from standing out or for wads of cotton called "plumpers" to fill out hollow cheeks. The reduction of the time of exposure to a minute or so helped to decrease the cost. The ordinary size of a daguerreotype was 2¾ inches to 3 inches, and it cost from $2 to $3. The largest size was 13 inches by 14, while the smallest was made for a locket.

In 1896 the only daguerreotype studio in the United States was at 19 Tremont Row, Boston. It was in charge of Mr. Hawes of the old firm of Southworth & Hawes, and there among daguerreotypes of Webster, Pierce, Garrison, Sumner, Jenny Lind, Charlotte Cushman, and Harriet Beecher Stowe any one who had the inclination and the money could sit for a daguerreotype. But now there are no daguerreans; the present generation has no use for daguerreotypes except as mementoes.—*N. Y. Evening Sun.*

## SALESMANSHIP

BY E. BELLE-OUDRY

SALESMANSHIP in a photograph gallery until now has been a haphazard business, a thing which many have seemed to think anyone could do.

To be a salesman and not an order taker is quite a different thing. The retail employee who merely waits upon people who already want the goods is not a salesman at all, and must not complain if he always has to work for $7.00 a week.

The clerk who is a real salesman will politely and tactfully wait upon the customer and take his orders, and by attracting the customer's attention to something else that he ought to have will arouse his interest, create a desire and resolve to buy, then a sale has really been made.

Take, for instance, an 11 x 14 enlargement. The order taker will miss the chance to sell one when delivering some work by simply neglecting to offer them for sale.

If the gallery does not make enlargements, the proprietor should read up on the subject, as, once the outfit set up, a girl can be taught to make them in a very short time. From $1.50 to $4.00 can be obtained for an 11 x 14. All depends on how valuable they are made to appear.

Make it a point to show your best work and finish first, as you can recede to something less expensive if necessary, as it is next to impossible to get them to take a better grade after once having shown the cheapest you have.

Thousands of dollars slip through the fingers of an order taker, people who work mechanically, not mixing brain stuff with their work. I maintain that by judiciously and tactfully calling the attention of customers to

other styles than the one they call for, higher prices can be obtained.

Many clerks act as if they doubted the customer's willingness or ability to pay the price. If the salesman thus doubts, the customer is very apt to doubt himself. Be positive.

A bride and groom intending to be photographed will want the best and rarely anything smaller than Paris panels, and often more than a dozen. Never ask, "How many will you have?" but, "Will a dozen be enough?"

As you have different grades and styles, you have, of course, stated the prices. Now you can ask them which they prefer. This will give you an inkling as to the amount they intend to spend, which will give you a chance to talk up the next in price, a style that you think will suit and please the best. You should not be guided by the prospective customer or believe everything he says. The salesman who takes "No" for an answer too easily is not a salesman at all, and has little indeed of the power to influence in the proper direction, which is salesmanship.

Never be afraid to ask and maintain prices. The buyer will take care of himself. Anyone can give photographs away. Salesmanship is to have the ability to sell and sell at a profit. Explain that a cheap photograph necessarily is an inferior article, creating trouble, dissatisfaction, and that cheap photographs, as other articles, are often the most expensive in the end, as they are probably not well finished and are apt to fade.

The salesman at the psychological moment must be mentally alert to the state of intense desire on the part of the customer, and when desire is swinging toward resolve to order, it is then that the true salesman stops talking. This psychological moment is often sensed by a certain act of hesitancy on the part of the customer. Now it would be time to say, "I am certain that this style will suit you. We can take a bust position, a three-quarter length, and a full length, and submit the proofs to you for you to decide. I will now give you a check for the operator."

## THE SALESWOMAN

BY E. BELLE-OUDRY

A WOMAN over thirty will usually be more successful than a younger one, having had more experience of the world and consequently more tact and more consideration, and will say what she thinks and will make the customer feel good.

Greet your customer so smilingly, so courteously, and deal with him so honestly, so squarely, that he will walk half a dozen blocks past other studios to deal with you.

Make friends with the children; it is through them oftentimes that you get hold of the heart strings of the parents. If a mother has her baby photographed, be sure to find something to praise about the baby—his size or good looks. A tactful saleswoman will ask about its food or anything just to seem interested in it, and notify the operator, if necessary, to make extra negatives if she thinks she can get an order for a strip or a medley.

The ideal saleswoman must be thoroughly independent, must be free from all influences on the part of the customer. She must not accept gifts or dining, etc. She will thus win the

respect, esteem, and confidence of the proprietor.

Good looks are not absolutely necessary, but a ladylike, pleasant bearing and manners are essential. She should cultivate a pleasant voice. No rasping or shrill voice will ever do in a reception room. Neatness in appearance is always to be desired as to dress and care of the person.

Be patient and do not hurry your customers, nor tire of showing the varieties of styles in which they are interested, and follow the same rule for the poorly clad customer as the prosperous looking one.

## TO PREPARE ADVERTISING COPY

You must write as one having authority. There is magnetism in the assertion of superior knowledge, because such an assertion implies the dominance that influences action. Power is of itself magnetic. Confidence in yourself commands the reader's confidence. Remember that the first principle of dominating another mind is to show that you have superior knowledge or experience. When you write copy you want to lead masses of people to act upon your suggestion. Go back to history for guidance. Remember that the leaders of masses of men were always stronger than their followers—either physically or mentally—and that in order to establish their ability to lead they had to establish the recognition of their dominance and superiority. Weakness looks for its complement, strength. Timidity wants to lean on confidence. Ignorance is magnetized by knowledge. The small seeks to shelter itself behind the great. Logical analysis and all the experiences of history show that first among the requirements of leadership is strength and second comes its demonstration to those who are led. You cannot escape from the law that before you can make another mind act upon your suggestion you must stamp it with your dominance and superiority.

All the sacred writers and leaders of men, in addition to being dominant, first built their leadership upon the interests of their following even if thereby they were only seeking to advance their own. Writing of the importance of each man's interests to himself, Max Stirner, the great German doctrinaire of individualism, says, in "Der Einzige und sein Eigentum," "Every idea, every system, every sacred cause, no matter how great, is outrivaled and modified by each man's personal interests." All successful leaders appealed to the interests of their following. The sacred writers brought the remedy for men's fears, Leaders of the masses always built upon the interests of the men they led. The advertising man—the writer of copy—must do the same. First in his mind must be the reader's interest. Never forget that. Man is interested in himself first. His ills are larger than the remedy. Desire is greater than its satisfaction. The present want or need which your goods fill is larger to your reader than the future satisfaction. First find your reader's interest and then interweave your goods with the interest. Dr. Flinders Petrie, the famous student, in "Lines of Advance for the Human Race," says: "There is a common feeling that business cannot be interesting in itself, but there are few if any businesses which, if intelligently followed, will not yield scope for some real interest of obser-

vation and study." Copy that sells is not fashioned on what you want to say, it is founded on what your readers are ready and anxious to hear. As soon as this principle is grasped, the whole idea of copy is changed, the writer fades and the seeker of interest grows.

Professor William James, of Harvard, writing of "How Interest is Acquired," puts this principle very concisely. He says: "Any object not interesting in itself may become interesting through becoming associated with an object in which an interest already exists. The two associated objects grow, as it were, together; the interesting portion sheds its quality over the whole, and thus things not interesting in their own right borrow an interest which becomes as real and as strong as that of any natively interesting thing."

The writer does not need words, he needs knowledge of mankind's instincts and interests. Then he needs the mentality to superimpose the interests of the seller on those of the buyer. That is the explanation of why the maker of the goods, or the man who is very close to their sale, is not the best man to write about them. His own interests are uppermost in his mind, whereas the uppermost idea should be the reader's interests.

The majority of men are "slaves of eternal routine and intellectual sloth." They must be given skeletonized facts, powerfully presented and without any involved reasoning that might strain undeveloped mentalities. The average man is so lacking in imagination, judgment, perception and applicability that it is useless to base an appeal on any facts requiring the use of these mental functions. Put your suggestion of action in interesting, powerful form.

Gustave Le Bon, the great French student of the influences which sway crowds, says: "Affirmation pure and simple, separated from all argument and all proof, is one of the surest means of making an idea penetrate into the mind of the masses." He goes on to say further, "The more concise the affirmation, the freer it is from all appearances of proof and demonstration, the greater its authority."

Recognize the fact that, at bottom, the majority of mankind is highly suggestible. Have so superior a knowledge of the harmony between your reader's interests and the product you offer that you can take a dominant authoritative attitude in suggesting the action which should be taken as a result of your suggestion. Your knowledge of both sides of your market should be so thorough that what you write will show a confidence in yourself that will beget confidence in your readers. Before you can expect action on your recommendation you must convey a sense of your authority. You must yourself be steeped in the sense of advantage to your reader. As Maeterlinck says: "It is not enough to possess a truth, it is essential that the truth should possess us." Your object must not be to make your reader think that you write well. You profit nothing by having him simply admire the art in your illustrations or typographical arrangement. Your sole object must be so to dominate your reader's mind that you will force him to take the action you suggest. Do not try to write well, or, rather, do not let your thoughts centre on your writing. Think of what your reader is prepared to hear and what he will agree with.

When you follow the experience of history in writing to influence men and women and force their action, you will achieve results that are impossible if you follow no rule, and write on a hit-or-miss system. Of course, it is easy to appreciate and learn the law;

the difficulty lies in its application. Advertising copy will not be improved so much by development of the art of writing as by increased knowledge of why and how men's minds are influenced. In order that we hasten the development of a department of business which is as yet only in its infancy, we must search the past as well as the present, so that, as Michael Maher, the marvellous Jesuit who is such a master of the science of mind, says, we may "detect those unobtrusive analogies which are the fruitful parent of so many great discoveries." Since the experiences of the past and present are together greater than the experience of the present alone, when we dip into the past as well as the present we better realize the laws which operate in every form of endeavor. "The present is absolutely incomprehensible without the past to guide us," says Novalis. We are all better mental mechanics when we drop for a moment our shackles of narrow-mindedness, parochialism, personal interest, bias and orthodoxy and stride freely through the hills and valleys of the past. The principle that was laid down in Ecclesiates 3000 years ago is even truer today than then:

"The thing that hath been, it is that which shall be; and that which is done is that which shall be done; and there is no new thing under the sun. Is there any thing whereof it may be said, 'See, this is new?' It hath been already of old time which was before us."—THOS. E. DOCKRELL, *in Advertising and Selling.*

## A UNIVERSAL DARK-ROOM DEVELOPER

BY J. H. BURKHOLDER, MANSFIELD, OHIO

MANY things have been written concerning tanks and tank-developers relative to temperature, time, strength, etc., but I cannot recall of reading of an account giving a pyro stock formula with instructions for the proper amount of dilution for the different methods of development. For that reason I believe many readers will be interested in a formula that will adapt itself to be used in either the tray or tank method without modification aside of the proper amount of dilution, etc. After numerous tests I have succeeded in formulating a system that I have put to practical use for nearly two years past with complete satisfaction.

If the following stock solutions are compounded and used in accordance with instructions, satisfactory results are sure to follow:

A

| | |
|---|---|
| Water | 24 ounces |
| Sulphite soda (anhydrous) | 4 ounces |
| Pyro | 1 ounce |

B

| | |
|---|---|
| Water | 30 ounces |
| Carbonate soda (anhydrous) (or crystals, 8 ounces.) | 4 ounces |

C

| | |
|---|---|
| Water | 16 ounces |
| Iodide potassium | 30 grains |

For tray development take A, 1 ounce; B, 1 ounce; water, 6 ounces, omitting the iodide solution entirely.

For tank development, use as follows: A, 1½ ounces; B, 1½ ounces; C, 1 ounce; water, 30 ounces, or in these proportions according to the amount of solution required to fill the tank in

use. Ascertain the tempertaure just before adding the stock solutions, that is, test the water, as the stock solutions will not effect the temperature perceptibly. Temperature should test 65° and being careful that the duration of development is carried on exactly twenty minutes. This proceedure will give satisfactory results on most of the standard makes of plates, having tested it on Cramer, Standard, Polychrome, Hammer red label, and Plastic plates, with uniformly fine results. Should it fail to give the exact density wanted on other makes of plates, a change in the time of development of, say, two minutes more or two minutes less will doubtless bring about the desired change in strength.

To some it may be a speculation as to what action the iodide of potassium would have upon the developer when used in the tank. In this connection I will state that a very weak developer often produces a slight stain or fog which would result detrimentally to the printing quality of the negative and this solution is an absolute specific against this trouble.

The iodide solution can be added to any other pyro tank developer that may be used in about the same proportions as herein given with the same assurance of being a complete stain eradicator.

Of course it must be understood that all rules governing tank development not herein mentioned must be regarded, such as changing the position of the tank occasionally and other rules of this nature if the best results are to be secured.

## REPRODUCTION OF BLACK AND WHITE

In the reproduction of subjects in black-and-white—that is, manuscripts, engravings, line drawings, plans, etc.—a method must be employed entirely different from that made use of in reproducing subjects having half-tones or gradations of light and shade.

We must have an entirely different mode of illumination, and must endeavor to get rid of the grain of the paper, or rather the shadow of the grain. A flat light is indispensable, and this is best secured out of doors, the illumination coming from the front.

First let us consider the kind of plate. For some kinds of work the so-called process plate or photomechanical plate may be made use of; but if the original is an old manuscript such a plate is not as good as a quick bromide plate, but the best kind of plate for old documents is an orthochromatic plate.

Mr. F. E. Ives recommends the following method for orthochromatizing an ordinary plate. Dissolve one grain erythrosin in four ounces alcohol. Filter the solution. Bathe the plates in this for two minutes, rocking the tray, then wash in distilled water and dry.

As regards exposure, it is best to make a trial plate for varying periods. Give the whole plate thirty seconds, then push in the slider a certain distance, giving forty-five seconds, or fifteen seconds more, and so until you give ninety seconds. One cannot get the best results without ample exposure, but excessive exposure is to be avoided, as it clogs up the lines and defeats efforts after density. The lines in the negative should be clear glass and the page dense black.

The Development.—Pyro is capable of giving density, but it has a tend-

ency to veiling or of showing the characteristic pyro stain. Hydroquinone is preferable to any other agent.

Lumière's formula is perhaps the best:

| | |
|---|---|
| Hydroquinone | 8 grains |
| Sodium sulphite (gran.) | 80 grains |
| Formaldehyde | 1 drachm |
| Distilled water | 1 ounce |

This contains neither alkali or bromide, but yields very intense negatives. In cold weather this developer must be warmed to 70 degrees.

The main thing to be observed for black-and-white work is clear lines, so if it should happen that your developer gives any indication of veiling stop developing at once, wash off and fix thoroughly, and again wash well from hypo.

If on examination any sign of veiling is visible in the negative, it will be absolutely necessary to clear up the plate before intensification.

Belitzski's formula is good:

| | |
|---|---|
| Potassium ferric oxalate | 10 grammes |
| Sodium sulphite (gran.) | 8 grammes |
| Oxalic acid | 3 grammes |
| Hypo solution (½) | 50 c.c. |
| Water | 200 c.c. |

Flow the plate over with this until the lines are clear glass and then wash.

Another clearer (Bartlett's) is:

| | |
|---|---|
| Perchloride of iron (ferric chloride) | 60 grains |
| Citric acid | 120 grains |
| Water | 16 ounces |

Bathe the negative in this and then thoroughly wash.

A good intensifer is iodide of mercury, made by adding a solution of potassium iodide to a solution of mercuric chloride (10 per cent. solution) until the brilliant precipitate formed just redissolves. After intensification, soak for ten minutes in sodium sulphite and wash.

Pencil drawings sometimes gives much trouble in copying. A piece of very fine ground glass placed in close contact over the pencil drawing in a painting frame, and the copy made through this, gives better results than direct copying.

Blue prints are, of course, hard to reproduce. A yellow screen placed in front of the print turns the lines into a dirty green. An orthochromatic plate is then made use of.

The paper employed will depend upon the character of the print required. Platinum, of course, may be made to give rich black lines, but bromide paper, properly treated, gives as good results at much less cost.

Ferrous oxalate must be used about one part of iron solution to five parts of oxalate solution. Add the iron to the oxalate and about five drops of 10 per cent. solution of bromide of potassium and five drops 10 per cent. solution of citric acid to every six ounces of developer.

---

A GOOD metol one-solution developer for snapshots is metol, 2 grains; sulphite of soda, 22 grains; carbonate of soda, 13 grains; bromide of potash, ¾ grain; water, 1 ounce.

A standard pyro-soda developer for normal exposures is pyro, 2 grains; sulphite of soda, 12 grains; carbonate of soda, 14 grains; bromide of potash, ½ grain; water, 1 ounce.

For over-exposure, increase the quantity of developing agent, *e. g.*, pyro, metol, etc., add extra bromide up to 2 grains and use less alkali.

In making up pyro developers, the preservative (sulphite of soda or an acid) should be first dissolved in the water and the pyro added last.

With all subjects that contain harsh contrasts or err on the side of underexposure, the developer should be diluted with twice its bulk of water.

VIEW OF ARMORY

Where the National Convention will be held. St. Paul, Minn., July 24 to 29

RUDOLPH DÜHRKOOP

In charge of the School of Instruction at the National Convention, St. Paul, July 24 to 29

By J. Seiling
Munich

By Gerb. Lükel
Munich

By Gerb. Lükel
Munich

By Kempf & Paulus
Prague

By Alex. Möhlen
Hanover

By H. F. Lamminga
Zwolle

By G. A Barton
Birmingham

By J. Seiling
Munich

By Jobst & Co.
Vienna

By L. Zumbühl
Berne

By R Dührkoop
Hamburg-Berlin

By Genscheidt & Schiffer
Dresden

1. Portrait of a Young Man
2. Bernhard van Orley
3. Portrait of a Man
4. Portrait of a Man

*Illustrating Sidney Allan's Article*

5. Self-Portrait
6. Dürer's Father
7. Portrait of a Man
8. Hieronymus Holzschuher

*Illustrating Sidney Allan's Article*

9. The Virgin
10. Self-Portrait
11. The Virgin
12. Felicites Tucher

*Illustrating Sidney Allan's Article*

# MASTERS IN PORTRAITURE—ALBRECHT DÜRER

BY SIDNEY ALLAN

NOT unlike Holbein, Dürer was primarily a draughtsman. He was not as capricious and sketchy (and in that sense as modern) as his countryman, but line drawing dominates all his compositions. It is a Teuton characteristic, all German painters—up to this very day—have adhered to it, and Holbein was perhaps its finest exponent.

His portraiture is the least interesting part of his work. He regarded it, no doubt, as so many of the Old Masters as a secondary affair. He had other more important fields of exploitation, to which he devoted most of his time, and whenever he sat down to a portrait he did not exert his imagination or mentality. This may explain the striking similarity of so many of his portraits. It is surprising how often the three-quarter view (looking toward the left) occurs in his pictures. I believe 80 per cent. of all of his portraits were painted in that position. And then the queerly shaped cap or hat, it is rarely missing. Besides they are all bust portraits and often without hands.

And yet they impress one as being wonderfully true to life. And this is largely due to the masterly drawing which outlines every picture and makes the most of it. Look with what precision the lines of the mouth, the nostrils, and the eyelids are drawn. He apparently saw everything just in line. His lighting does not show much variety. He used nearly always side light from above, but not from a top light, probably through the upper panes of a window. He rarely made use of shadows as a vehicle of contrast or picturesque qualities, he was satisfied if it threw the face into ordinary relief and helped to accentuate the lines. Space arrangement and spotting in our sense was unknown to him.

Figs. 1, 2, 3, 4, and 7 are all composed in the same way, a three-quarter view against a dark background. Dürer's backgrounds are interesting as they are plain and show no great variety of tints. And yet how they bring out and accentuate the contour of the head. He never needed any striking variation of tints or a sudden flash of light to assist the importance of a line. He drew simply a pleasant line. That seemed to serve the purpose. This is particularly noticeable in Figs. 2 and 4. The shape itself of the hat is picturesque, and by adjusting it in such a manner that its lines harmonize with the lines of the bust and the straight margin lines of the picture area itself, the result is one of harmony. But is this not space arrangement you may ask. No, not as we understand it. Dürer never tried to produce an odd shape for oddness sake, or to produce an unusual effect. He simply took things as they came and bent and arranged objects in such a way that they produced pleasant forms and shapes.

Dürer probably chose the three-quarter view, as it offers the best opportunities for the skill of a draughtsman. He was fond of accentuating the cheek-bone and the bridge of the nose (viz., Figs. 1, 2, 3, 6, 7, and 8). The face of a woman he preferred in a more full face view, as in his "Holy Virgin" pictures (Figs. 9 and 11), unless it was a very strong face like that of Felicites Tucher, Fig. 12, which has as much firmness and peculiarity of features as that of a man.

The eyes are always beautiful in a Dürer portrait. He was not afraid of *drawing* the eye just as it was, and he lent life to it by the clearness of the pupil and iris. They are the soul of the eye, and are frequently neglected in modern representations. To represent the inner life of a person, nothing is more conducive than an exact reproduction of the eye. A blurred effect may have its charm and express more sentiment, but it lacks vitality.

The costume of the day allowed picturesque bust effects more readily than the angular form of a modern collar and sack coat. Effects as in Figs. 2 and 3 are impossible. More suggestive for our purposes seem Figs. 1 and 6. What we must marvel at is the utter simplicity of handling. A few telling lines, a differentiation of tint, that is all. Something similar could be done with our modern tailor-made suits.

The hands Dürer treated in a rather whimsical fashion. In Figs. 2 and 4, they look as if they were cut off, trimmed at the wrong place. And yet the little of them is highly expressive. Of course, he was not afraid of introducing them. If any painter could draw hands anatomically correct it was Dürer. You only need to look at the pigments that he introduces (Figs. 2 and 4). He very likely did not think them essential, or thought that they made too large planes that would interfere with the face.

Of his portraits I like his self-portraits (Figs. 5 and 10) the least. They seem to be affected. Unlike most painters that feel at perfect ease when they paint themselves, and generally do their simplest and most convincing work in these efforts, the master of Nüremberg lost himself in self-adulation. They impress us as being arrogant, as if the painter wished to convey to the beholder an idea of his greatness as a man and artist. Dürer, no doubt, was a handsome man, but he laid too much stress upon it. His other portraits are infinitely better.

His Fig. 7 merely represents a type. But how life-like it is. There is no idealization, but merely a representation of facts. Also "Dürer's Father," Fig. 6, and "Hieronymus Holzschuher," Fig. 8, have the same life-like appearance. They are not posed. There is no attempt to make them look exceptional. They are simply photographed—by the eye and pencil of a great artist.

The size of the head is generally very large for the area of the picture, much larger than in the portraits of the Italian Masters. To Dürer after all the head was the principal thing, and the more space he had for it, the easier it was for him to draw it accurately.

In his "Holy Virgin" pictures he works very much like a Primitif, *i. e.*, he makes no concessions to more advanced and popular ideas of beauty. We do not understand how a man who knew form so well could ever draw children so awkwardly as in Figs. 9 and 11. We cannot deny their charm of *naïveté*, but a man who could draw heads like Fig. 7 surely could represent in a more satisfactory fashion.

The background in these pictures is too dark. It makes the figures appear too much like silhouttes. The same could be said of his light background, Figs. 6 and 8. A head may protrude from or recede into the canvas, no matter, but the background should always surround it in such a way that it forms an inseparable part of the picture.

Dürer has taught us, above all else, the value of line as a medium of character expression, without which portraiture is not much more than a mere pictorial pastime.

## A VISIT TO THE HOME OF THE COOKE LENS

WHO is there amongst photographers that has not heard of "Cooke" lenses? asks the Roving Commissioner of *The Photographic Dealer*. They caused such a stir when they were first introduced, and have, by sheer merit, forged ahead to such an extent that not to know the "Cooke" lenses is to declare one's self unknown, if we be in any way connected with photography or photographic trading.

The manufacturers of these famous lenses, Messrs. Taylor, Taylor & Hobson, Ltd., have their factory at Leicester, just a hundred miles from London, and it is not permitted to everyone to inspect this factory, even supposing they be able to make the necessary journey. For this reason, and because the products of the factory have attained a world-wide appreciation, I am convinced my readers will be interested in a report of my visit to the works of this progressive firm.

Armed with my notebook I arrived at the Stoughton Street Works, Leicester. Mr. Hobson, the director who supervises the commercial side of the company's business, received me and displayed his business aptitude at once by relieving me of my coat and hat and plunging straight away into an inspection of the premises.

As we passed through the doors leading from the offices to the factory, my attention was called to a notice board which bore an announcement to the effect that prizes were offered by the company to workers for thoughts and suggestions for the improvement or better production of any of the specialties handled in the factory. A box to receive such suggestions was close by and it struck me as being a splendid principle which others might adopt with advantage. At any rate, the idea has proved a success in this instance, and has been in vogue for some considerable time.

We descended to the basement, and there a big stock of castings and rough parts are stored in such methodical order that I was about to ask Mr. Hobson if the tickets attached to every drawer and receptacle indicated that "stock-taking" was in progress. Before I could put my question, however, the secret of the system was explained. A system is in vogue throughout the works whereby the stock is always regulated by the demand, and this is accomplished in a very clever manner. On cards attached to certain articles, or drawers containing them, a "minimum number" is attached, and the moment the stock falls to that number a fresh supply is put in hand. In the case of screws even, minimum boxes are used to indicate the low-water mark, and the stock must never fall below the quantity these boxes contain. Tubes and Iris diaphragm parts are all treated in the same manner, and the saving of delay and annoyance thus effected can only be appreciated to the full by those engaged in manufacture.

In another portion of the basement I inspected the apparatus for maintaining the works at an even and comfortable temperature. In cold weather, such as it was on the occasion of my visit, the incoming air is passed over radiators, which warm it to a temperature which will not cause drowsiness and then passed into the various workrooms. In hot weather the air is passed over ice, and then admitted into the factory, where its cooling influence is felt and appreciated by

the workers, and also by the company, which derives the benefit of getting the best results from workers who have the advantage of such ideal conditions.

Many of my readers are aware of the fact that Taylor, Taylor & Hobson, Ltd., possess the finest machines in the world for engraving lens mounts and other articles; these machines, which have the pantograph movement, are, of course, used for engraving the mounts of "Cooke" lenses, but they are also supplied to optical and other works in all parts of the globe. I have seen them in use in many factories both at home and abroad, and was particularly pleased to meet them in Germany. In the engineering shop, which we next entered, I was most interested in seeing these engraving machines in course of manufacture. Planing machines were busy working on four columns at a time for them; millers and shapers were to be seen working up the various parts, and a row of finished parts in the course of erection denoted that the demand for the company's excellent engraving tool was considerable.

An extension had to be made to the works ten years after the new factory was completed, and this is devoted to tool making and experimental shops, and the activity of the workers and buzz of machinery conveyed the impression that business was humming, as the place literally was. As I passed from this busy scene an array of coats and caps in a large room opposite a washing trough came into view, and the ingenious arrangement of safeguarding the property of the staff and providing a quick means for cleaning operations before the workers leave the building, gave me another insight into the attention to detail which the company find it expedient and profitable to provide.

Mr. Appleton, the optical director, now took me in hand, and explained that the instrument department was under his control, and that Mr. William Taylor had the mechanical department under his supervision. Ascending I found two splendid floors, one devoted to brass work, and the other entirely to glass work, each floor being provided with a separate overseer. Mr. Appleton was full of praise for Mr. William Taylor, whom he described as a mechanical genius capable of designing machinery to fulfil any special object required.

In the glass shop a number of automatic machines with peculiar long arms were busy grinding the surfaces of "Cooke" lenses, and these machines were made in the works to the design of Mr. Taylor. On one side of the shop the rough grinding was in process, and on the other the finishing operations were being carried out, a partition separating the two processes so that grit and dirt are kept apart. Secret processes are in operation, and a number of machines caged off are barred from inspection.

The number of men engaged in grinding, polishing, and finishing off the glasses for lenses told plainly that the demand for "Cooke" lenses is on the increase. We made our way to the brass shop to see how they were preparing the mounts to receive the output from the extensive glass workshops.

Rows upon rows of metal turning tools met my gaze, and, as I passed between them, the familiar operations of turning up and trueing the mounts were to be observed. Here again the rough work is delegated to one side of the shop and the finishing processes to the other. One little chasing lathe, which was cutting screw threads with perfect accuracy, was particularly interesting to watch, and the operator

in charge informed me that no hand chasing could compare with the accuracy of this machine. Lathes with oscillating heads were performing most wonderful tasks, and I cannot recall ever seeing such devices before. A blast of cold air was impinging upon work in other tools to prevent distortion by heat, and to secure absolute accuracy.

Metal sheaths for shutters were being stamped out by a battalion of stamping machines, and afterward were placed in curious machines called "shakers" to smooth down their rough edges. I may mention here that Mr. Appleton explained to me that vulcanite sheaths had an unhappy knack of fusing together in hot climates, and so his company never supplied any but metal sheaths to the Iris diaphragm.

The plating and chemical departments disclosed the interesting fact that whereas on many Iris scales the surface is bright, Taylor, Taylor & Hobson blacken or oxidize the surface so that it shall harmonize with the finished camera. The plating of "level" cells was in process in this department, and it is interesting to note that this company has got nearer than most firms to producing a level that won't leak. The bodies of the levels are made from sheet metal drawn up in presses under great compression, which closes up the pores of the metal and makes it more air-tight than any casting can be.

In the fitting up department "Cooke" lenses were in abundance; these consist of three uncemented lenses, the front, middle, and back lenses, all detachable, and the shutter can be readily inserted between the lenses. The advantage of being able to separate the lenses will be appreciated for cleaning purposes, as well as for optical application.

Large quantities of "Cooke" lenses were in evidence, being fitted with the between-lens type of shutter, and Mr. Appleton remarked that makers don't alter cameras to fit lenses, so the lens makers had to adapt their products to the cameras. An application of this was to be seen in a new lens hood which the company were providing, which rotates to operate the diaphragm for Reflex cameras. This will be found to be of special advantage when applied to cameras with sunk fronts.

The Testing Department was full of interest. Here a sort of card index system is adopted by which the records of any particular lens may be referred to at a moment's notice. A big camera on rails is used for photographic tests, but what is known as the telescopic test, and an artificial star test, are also employed. From a brief inspection of these methods, and an insight into the comparative result of the "Cooke" lenses with other types, I could only come to one conclusion, and that was that the "Cooke" lenses held their own in the field of photographic optics, and would be difficult to beat.

Alloys of aluminum are used to save weight, and every conceivable device is resorted to in order to adapt the "Cooke" lenses to modern requirements. An inspection of the finished products of this go-ahead factory left me with the impression that no competition would be likely to disconcert the directorate.

One of the latest of Taylor, Taylor & Hobson's productions—the Wide Angle Primoplane Lens—has literally bounded into popularity. It is a development of the "Cooke" lens designed specially for wide angle work at a large aperture.

My attention was also called to the Series II. "Cooke" lenses, which are ultra rapid, having a working aperture of $f/4.5$. The $10\frac{1}{2}$ and 13 inch lenses of this series are provided with an improved means of diffusion adjust-

ment, which is operated from the front of the camera. This enables the photographer to secure at will uniform sharp definition or to introduce any required softness evenly throughout the plate.

"Our process lenses," said Mr. Appleton, "have a field of their own, and in the United States the 'Cooke' lens has taken the place of the older makes in nearly all Government departments."

Over a cup of tea I learned some very interesting facts connected with the progress of the company, and the increasing demand for the simplest of all anastigmats, viz., the "Cooke" lens. I was also keenly interested in what I may describe as "the limit of error" system which is applied to everything manufactured in this well-organized factory. All parts are made within a limit of error of a thousandth part of an inch. With every job a template is given to the worker which has a double gauge, one of which is one-thousandth part of an inch smaller than the other; every finished part must be between this infinitesimal variation, and the consequence is that every part is made absolutely interchangeable.

The sale of the "Cooke Lens" throughout the United States is conducted by the Taylor-Hobson Company, a New York corporation under the able management of Mr. J. Ronald Taylor, who in less than ten years has made the "Cooke" lens one of the best known and most popular lenses throughout the country.

## PLATES FOR COLOR PHOTOGRAPHY

BY CHARLES GRAVIER

SINCE I gave in a former article the results of trials made with these plates, some improvements have been made in their preparation. I shall not give the historic details of the progress that has been made, but only make some remarks as to their qualities in general, for when the manufacturers are modifying their products it is well to guard oneself against stating precisely their respective qualities. As with ordinary plates it becomes possible to arrive at a medium quality and every operator will have his own preferences, more or less justified.

In France, where I live, we have actually three kinds of color screen plates —Autochrome, Omnicolor, and Dioptichromes. They enable direct color photographs of a colored subject to be obtained by one exposure only, with a fidelity of color rendering which is often nearly perfect. The manipulations are simpler and, on the whole, quicker than for the ordinary plate (reserve being made for the use of the new automatic methods now applied to ordinary plates). The time of exposure depends upon the quality of the light, which is very variable if daylight is used, and the human eye cannot differentiate exactly such light, the same as with artificial sources of light, which are equally variable. If the duration of exposure is such as the manufacturers indicate in their prospectuses for the different plates, there is a medium time to be followed, because their trials are exact and rather weak than strong.

There is not for these plates a latitude in the exposure just as with ordinary plates, with which one can give, as we demonstrate daily, up to

100 times the normal exposure. One cannot depend upon a plate which has been exposed one-third of the proper time if a good result is to be obtained, whereas with an exposure double that recommended, a result will be obtained which, though weak, can be made useful and pleasing by intensification.

As a matter of fact, all these color screen plates are based on the same principle. On a glass plate a series of triads of small, transparent screens are formed by different means, some of the screen particles being blue, others red, and again others green, and which have been juxtaposed more or less regularly. A layer of varnish protects these colored particles, and on this layer of varnish the sensitive emulsion is put. The makers are always trying to improve this emulsion, especially with regard to its higher sensitiveness and its keeping qualities, two factors which cannot usually be obtained together.

Originally, the Autochrome plates could be guaranteed to keep for two months, and it has been extended by Messrs. Lumière to three months, but I have been informed that they can be kept much longer. My own opinion is, however, that when they are used only a few weeks after preparation, the results will be better, and this is the opinion of practical workers.

Count Delmas, who has shown results obtained with Autochrome plates of from four to five months old, has proved that when exposing twice or three times the ordinary time, satisfactory results were obtained, but the image was a trifle weaker. He is of the opinion that when the first development is not delayed more than two or three days, the results will be better than after a week. This we have said from the beginning, and, therefore, we have designed our portable developing box in order to be able to develop near to the subject photographed, or on the evening of photographing.

For developing Messrs. Lumière have adopted a methodical way of procedure consisting in only pouring into the dish one-quarter of the necessary concentrated solution for a normally exposed plate, the quantity of water remaining invariable. After twelve seconds from the immersion of the plate in the dish, it is necessary to inspect the plate, and one can tell by looking through it when held near a light covered with paper called "Verida," which gives a weak and bluish light, whether the outlines of the image appear, and at this moment, the remaining three-quarters of the concentrated developer are added. The time of appearance fixes the time for the stoppage of development, which instead of 2½ minutes may be 4 minutes, if the time of exposure has been too short.

Unless one can remember the exact colors of the subject which have been photographed, this method is problematical. The manufacturers of Omnicolor and Dioptichrome plates ignore this method altogether, and warn their customers against the danger of looking at the picture during development. At any rate, we would advise for portraiture or reproductions, of which the coloring has been noted, using at once the whole quantity of the normal bath, examining quickly after a minute, using the Verida paper for illumination to see how the image progresses, and keeping the plate in the bath a longer or shorter time, as may be necessary. One must not forget that, just the same as with the image on an ordinary plate, the image is negative and grayish in the dish, no color being visible. If a portrait, and the sitter has been dressed in black or in dark colors, the dress is hardly visible, and to get it into one's head that the same must appear at all costs would mean to lose the vividness of the clear colors.

As I am speaking of the vividness of the colors, I would like to refer here to their "relative solidity" with regard to the agents used for developing. *Throughout the coloring of a subject, the series of colors is unchangeable so far as their number and their intensity is concerned.* This is what our colleagues and many operators should bear well in mind to make their very different opinions agree. The three manufacturers use as a developer metol and hydroquinone mixed, with the idea of making it serve again for a second development. Messrs. Lumiére also mention pyrogallol, although advising the first named, and I think they are quite right in doing so, although the uncertainty of preserving the ammonia solution at uniform strength troubles me; I therefore prefer the Pyroreeb in which the alkaline solution is fixed and does not give off its ammonia until the moment that the pyrogallic solution is added.

In the first development the image has been brought out by blackening only the particles of the emulsion which have received an impression from the light having traversed the small colored parts of the screen, which on account of this have been obstructed, and it is necessary to dissolve these particles. For this purpose Messrs. Lumière suggest a solution of permanganate consisting of two grams per 1000 c.c., which has been acidified with one cubic centimeter of sulphuric acid (pure) per liter of solution. The manufacturers of Omnicolor and Autochrome plates prefer a solution of bichromate of potash of 5 per cent. in water, mixed with 10 c.c. sulphuric acid per liter of solution. After trials made I prefer the solution of Namias, proposed by Stephan, which is composed of potash alum mixed cold (about 125 grams per liter of water), to which is added 2 grams permanganate of potash per liter. This solution hardens the layer of the emulsion. It is necessary every time the permanganate of potash is used to add to the water for the first washing 5 c.c. per cent. solution of commercial bisulphite of soda, which makes the picture clearer, at the same time dissolving the peroxide of manganese which has been formed.

In this state the image is colored by the light which traverses the series of color screens. If the subject has only clear colors it is preferable to preserve the image thus; but with black or dark colors the colored screens are obstructed while they let through a greatly diminished illumination, which makes these tones milky. A second development will improve the general aspect of the image, but will make the very clear shades darker. Space fails us to fully explain this fact, to which we have been the first and, we believe, the only one to draw attention.

At any rate, it is only after the second development that the troubles begin, and if only one plate is available, which is rather valued, it will be wise to avoid this treatment.

Originally Messrs. Lumière insisted upon the necessity of an intensification and fixing.

Considering the results we have obtained since our first plate, and the ill-successes met with after the second development, we warn our readers to act with great care in regard to the different operations to be gone through. Although the layer is more resistant, Messrs. Lumière do not now insist upon the second development, neither do the other manufacturers. The intensification is only recommended as a means of improving a plate which is weak through having been over exposed or over developed, and it is to be noted that the fixing bath is of no use if the image has not been intensified.

For intensification Messrs. Lumière indicate silver, the other manufacturers

bichloride. The latter are wrong, as it is well known that silver gives much more intense images.

Thus it will be seen that apart from the use of permanganate and alum for dissolving the developed image after the exposure, the manipulations remain the same. We would just remind our readers that by performing the first two operations and drying with a fan, one obtains on an Autochrome plate a dry proof quickly, and it is therefore much simpler and quicker than with an ordinary plate.

The gum dammar varnish with 10 or 20 per cent. benzine is too thick. It should be 6 per cent. or, better still, 4 per cent.—*Penrose Annual*, 1911.

## PRACTICAL BROMIDE MANIPULATION

### Exposure, Development, Toning, and Formulæ

Of the photographic printing processes in vogue today there is little question as to the superiority of the bromide process. Possessing a greater range of possibilities than any other, it is capable in many instances of imitating, and often excelling, the leading features in others. For rapidity of production the process is unequalled, while its simplicity renders the various manipulations operations of pleasure and ease. The technique of the process is precisely the same as in negative work, with slight modification. The fact that the printed image is latent or invisible should not be regarded as deterrent to the uninitiated, since the exposure and development can be so adjusted as to render the production of a print perfectly under control, the graphic value of the negative being secured in the print at will. The process stands without rival for the production of enlargements or large work, and features economy and certainty.

As the various operations of the bromide printing are conducted in the dark room, the source of illumination is an important factor, and deserves consideration. You must see what you are doing. As bromide paper is much slower than an ordinary dry plate it follows, then, that we can use a much stronger light. The ruby light is unsuited for our purpose, since the depth of our print could not be gauged satisfactorily. Undoubtedly, a yellow or canary tint is the most effective, and so long as it is safe it is immaterial how much there is of it. Test the light by exposing a piece of bromide paper, half of which is shielded, at a distance of six inches from the lamp for a period of fifteen minutes. Then develop the strip of paper, and if no fogging is apparent we may be certain as to the safety of the light. Should any signs of fogging appear we must make the yellow more intense by adding another thickness of yellow fabric and continue our experiment till all risk is obviated.

#### *The Negative*

This is where the bromide process excels. Any kind of negative may be used for printing, but the best results by far are obtained from negatives made specially for the purpose. A negative that possesses full gradation without fogging or clogging of the shadows, clear and brilliant with full detail, is the negative for bromide

printing. To develop a bromide print we require a developer that shall slowly build up density, and at the same time develop detail. In this respect few, if any, of the developers surpass amidol. After considerable experiment, I devised a developer, remarkably free from stain, excellent in its density giving powers and freedom from fog. The solution is made of 40 grains amidol, 330 grains sodium sulphite, 2 grains potassium bromide, water, 30 ounces. This developer keeps in good working condition for twenty-four hours, and is the solution intended to be used in conjunction with the toning processes to be described later.

### *Exposure*

In order that we might thoroughly understand the necessity for correct exposure a slight resume on the composition of the paper and the chemical action of the light thereon will be of material assistance. Bromide paper is made by coating a special paper with a gelatine-bromide of silver emulsion, similar in composition to a dry plate, but much less rapid. The process, therefore, of producing an image on the paper is precisely similar to the making of a negative. The simple chemistry is, briefly, as follows: When light acts on the emulsion a change is effected which is only rendered visible by development. The extent of this change has a two-way limit: Namely, under and over exposure. In under exposure, the actinity or power of the light or the duration the negative and print were exposed to the light, were insufficient to effect the necessary change in the emulsion; the result is that the print looks white and weak. On the other hand, in the over exposure limit, the reverse takes place; the exposure has passed the correct limit and commenced to decompose the emulsion; the result is that the print appears flat and muddy. In correct exposure the action of light has had the desired effect on the emulsion, and on development. We have a true positive with all gradation and detail portrayed accurately. Providing there be sufficient of the reducing agent present, a weak or dilute developer will produce exactly the same result as a strong one, only the time taken to reduce the image will be proportional to the strength of such developer, and, further, if the exposure has been correct, no further strengthening of the image will take place, no matter the strength or time of development. This factor is an important one, as the success of toning bromides depends on the print being developed to the limit, that is, as far as it will go. It follows, then, that our exposure must be correct.

### *Printing*

Printing should never be carried out with the naked flame, but a diffuser of ground glass should be placed in front of the burner. No illuminant is better for the purpose than the incandescent gas. To carry out the manipulations satisfactorily, method and system are essential. To this end the use of a printing board, or similar apparatus is advisable. This is simply a graduated board with the burner fixed at one end and a movable support for the printing frame at the other. The graduations are made at standard distances, the value of the light at each point being known. These values are calculated from the law of intensity of light. The intensity of a light is inversely proportional as the square of the distance from its source. That is to say, if the value of a light at one foot from its source is equal to 100, then at two feet it will be 25, at three

feet 11.1, at four feet 6.25, and so on. It will follow from this, then, that if correct exposure was five seconds at a distance of one foot from the light, at two feet it would be twenty seconds, and at three feet forty-five seconds would be required to produce the desired result. Experiments should be made with a certain negative to ascertain the effect of varying the printing distance and the use of blue and yellow glasses. A dense negative should be printed by a light of high actinity; and the actinity may be increased by the use of a blue glass. A thin negative should be printed by a light of low actinity, and contrast enhanced by a yellow tinted glass. Control over the scale of gradation is effected by the position of the frame on the graduated board.

### *Development*

The developer already mentioned is a weak solution, and enables considerable control over the print. My method is to use a fairly large dish and push the print under the solution without previous soaking. When development is complete the print is simply rinsed in water and transferred to the fixing bath, five to seven minutes' immersion in the following bath being sufficient:

| | |
|---|---|
| Hyposulphite soda . . . . | 1 pound |
| Sodium sulphite . . . . | 2 ounces |
| Citric acid . . . . . | ½ ounce |
| Water . . . . . | 60 ounces |

The print intended for toning is then thoroughly washed. By thorough washing I mean that the print must be absolutely free from hypo or other chemical. As the entire success of bromide toning depends on the absolute elimination of chemical contamination of any description, the word wash means immersing the print in running water for at least an hour. The necessity for perfect cleanliness in all the manipulations is imperative, and the hands, measures and utensils must not only be clean but chemically clean. Cleanliness is readily obtained by rinsing the utensils with hydrochloric acid and afterward thoroughly washing in pure water.

### *The Quality of the Print*

My experiments, which extend over some four years, were conducted on Austral velvet pearl bromide paper. I mention this without prejudice as being one of the best suited and easy toning papers procurable—further, the paper is always fresh, which greatly assists in the brilliancy of tone.

The print should be brilliant and carried to its limit in development. A flat or muddy print is useless. Generally speaking, the characteristics of the original print remain unaltered in toning, the full gradation of half-tone and depth being faithfully preserved. There is, perhaps, one exception—the hypo-alum toner. This bath when new bleaches the print slightly, but ceases to do so when a number of prints have been toned.

### *As Regards Permanency*

I have heard numerous statements on the alleged fugitive character of toned bromides. This, however, can generally be traced to negligence or carelessness on the part of the worker. The substance of the sepia toner is sulphide of silver, one of the most stable elements known, and when the composition of others is either gold, vanadium, platinum or silver their permanence is unimpeachable.

To facilitate operations I give a list of the necessary chemicals for the production of the colors:

Bromide potassium, 4 ounces; ferricyanide of potassium, 4 ounces; am-

monium carbonate, 4 ounces; ferrous sulphate, 4 ounces; hydrochloric acid, 4 ounces; nitric acid, 4 ounces; ammonia, 0.880, 4 ounces; sodium sulphide, 4 ounces; boracic acid, 15 grains; gold, ¼ ounce; vanadium chloride, 1 ounce; ammonium chloride, 4 ounces; hypo, 1 pound. In toning bromides we have the preference of two methods—direct and indirect. In the direct process one operation only is necessary, the color oxidizing or depositing direct on the silver image. As complex chemical compounds are often evolved there is question as to permanency, further the tones are not so brilliant as by the indirect process. In the indirect process the metallic silver image is bleached and converted from bromide of silver to silver ferricyanide. This allows of a complete substitution of the silver for the oxidizing reagent. The results, although slightly more tedious, are certain and reliable. Therefore, we shall only consider the indirect process.

### *How to Produce Sepia Tones*

The production of sepia tones is both beautiful and interesting. The thoroughly washed print is placed in a preferably porcelain dish and a solution compounded of 40 grains potassium ferricyanide and 40 grains potassium bromide dissolved in 4 ounces water is flowed over. Immediately the print begins to bleach, which should take about four minutes. When no further bleaching is noticeable the solution is poured back to the measure and the print washed in running water for ten minutes. Do not touch or finger the print or stains will probably result. A solution is now made of 120 grains sodium sulphide in 25 ounces water and this oxidizing agent is flowed over the bleached print, when, immediately, the image re-develops to a beautiful shade of sepia. The print should remain a minute longer in the solution than when it appears developed, and without washing be transferred to an alum bath consisting of alum 1 ounce, water 12 ounces. This effectually toughens the film and prevents the formation of blisters, which might otherwise occur. After remaining in the alum for ten minutes, half an hour's washing completes the process. This method yields a beautiful shade of sepia equal to a platinum print, and just as permanent. In sepia toning, and, in fact, all processes connected with toning, the solutions should be of as equable a temperature as possible—about 65 to 70 degrees—the hypo-alum bath being an exception.

### *Chocolate-Brown Tones by the Hypo-Alum Process*

The tones obtained by this process are unsurpassable, their brilliancy and warmth being especially pleasing.

The same qualities regarding the print for sulphide toning are likewise applicable to hypo-alum toning. The bath is composed of hypo, 12 ounces; alum, 2½ ounces; water, 60 ounces, and the method of mixing is important. The hypo is placed in the water and brought to a boiling point when the alum is slowly sifted in, stirring the while. The boiling mixture immediately turns milky and bubbles vigorously, at the same time emitting sulphurous fumes which should not be breathed. The solution is now removed from the fire and allowed to cool. In its present condition the bath would be extremely harsh on the prints, bleaching them hopelessly. To remedy the evil and ripen the bath I find it a good plan to add 50 grains of silver nitrate. To use the bath the temperature is raised to 100 degrees and maintained at this reading till the print or

prints are toned. A batch of prints may be toned readily in this bath, provided they are kept constantly turning. The operation takes from twenty-five to thirty-five minutes. When toned, the prints are washed for half an hour and are practically unfadable. Do not throw the bath away as it improves with usage. It is a good plan to have some raw bath made up, and simply add this to the working solution from time to time. The toning action may be stopped at any required shade, some exquisite results being thus obtained. This is the bath used commercially for the production of the toned bromide post cards. It is cheap, economical and unequalled.

### *From Pink to Crimson*

The process about to be described is fascinating in the extreme. The toning bath is composed of gold and the tones are permanent, ranging from various shades of pink to crimson.

| | |
|---|---|
| Gold chloride | 1 grain |
| Ammonium sulphocyanide | 10 grains |
| Water | 2 ounces |
| Hydrochloric acid | 10 minims |
| Sodium chloride | 10 grains |

Mix in order given. The print for the purpose is one that has been previously toned in the hypo-alum bath. After thoroughly washing the toned print, the gold solution is poured on, and in about ten minutes' time a change in color becomes noticeable. The print passes through various shades of pink and red till it finally reaches a rich crimson. Toning may be stopped at any stage. Very charming results may be produced by half or partly toning the original print in the hypo-alum bath, and then toning with the gold. By this means the shadows may be allowed to remain black and the half tones assume a red tone. For fire or fireside studies the effect is exquisite.

### *Blue Tones*

The silver print is bleached in a solution of

| | |
|---|---|
| Potassium ferricyanide | 12 grains |
| Ammonium carbonate | 40 grains |
| Water | 1 ounce |

After bleaching, wash the print free from stain and tone in a solution of

| | |
|---|---|
| Ferrous sulphate | 10 grains |
| Hydrochloric acid | 7 minims |
| Water | 1 ounce |

The toning action takes about seven minutes and yields a beautiful shade of deep blue. A certain amount of flooding of color to the whites will be noticeable, however, which is readily eliminated by immersing the print, after rinsing, in a hypo bath made acid by the addition of a little boracic acid. On placing in this bath a slight reduction in color is noticeable; this, however, returns as the hypo is got rid of in the washing.

### *Violet*

A print that has been toned blue, if treated with a weak solution—1 in 150 of ammonia carbonate—assumes a rich violet tint.

### *Green*

This is perhaps one of the most difficult colors to obtain. The print is bleached in a solution of

| | |
|---|---|
| Ammonia, 0.880 | 5 minims |
| Water | 1 ounce |

When bleached, wash and tone in

| | |
|---|---|
| Ferric chloride | 1 grain |
| Vanadium chloride | 1 grain |
| Ammonium chloride | 2 grains |
| Hydrochloric acid | 2 minims |
| Water | 1 ounce |

The result is a very fine shade of green.

Apart from the artistic possibilities of the process, bromide toning opens up a new field to the enthusiastic. To those taking up the work for the first time it is more than interesting. The bleaching, re-development and changing of color are beyond question some of the most beautiful experiments that science has revealed. The finished prints should practically be indistinguishable from carbons. The bromide process, however, places in our hands the possibilities of enlargement, with its enormous control and subsequent toning in any desired color, whereas the carbon process calls forth expensive apparatus or the costly enlarged negative. Care in all the operations leads to success, and bear in mind contamination, be it ever so minute, bespeaks blemishes or failure. —J. F. HURLEY, in *Australasian Photo-Review*.

## PERSPECTIVE IN PHOTOGRAPHY

### The Correct Distance from which to Look at Photographs

IT has become almost an article of faith with photographers that the focal length of a lens should be adapted to the size of the plate with which it is to be used, and one hears various proportions put forward as the correct relation between the diagonal, or base, of the plate and the focal length of the lens. To lenses with wider angles than given by the stated ratio violent perspective is attributed, and flatness to narrower angles. In the case of portraits an exception is made, and the curiously exaggerated effects often produced are put down to the sitter's being too near to the camera.

It is proposed to show in this article that the correct focal length to choose depends, not on the size of the plate, *but on the distance at which the finished positive is to be viewed*, and that the incorrect rendering of the features in photographic portraits is not due to the propinquity of the subject, but to the use of a lens of incorrect focal length.

Now, let the reader imagine for a moment that he is standing at the point from which he took a photograph and is looking through the negative, trying to make the image fit the original view. He will find, if his eye is in the exact position occupied by the lens of the camera when the photograph was taken, and if none of the objects photographed have been moved, that the negative coincides with the view at one, and only one, distance from his eye. This distance will be equal to the distance between lens (optical centre) and plate when the exposure was made.

If the photograph is held closer, the perspective will appear too flat, and if further away, too violent. We obtain here a rule which has been stated thus: A contact print only appears in correct perspective when the viewing distance is equal to the distance at which the optical centre of the lens was from the plate when the photograph was taken.

It will be convenient to consider under the two heads of (1) direct prints, (2) enlargements, what focal lengths are suitable for producing correct perspective.

#### *Direct Prints*

Direct prints of sizes up to 6½ by 8½ are, almost without exception, looked at from the normal reading distance,

varying somewhat with different individuals, but averaging about fourteen inches. Shorter distances than ten inches produce eye-strain, and greater distances than eighteen inches are inconvenient for holding a book or album.

Here we have a simple fact which is quite overlooked when lenses are fitted to cameras. Yet it is to a great extent the cause of that dissatisfaction which users of small cameras experience when gazing upon the results of their most painstaking efforts. The tiny distance, steep foreground, and distorted near objects, are but a caricature of the original views which it was intended to record. Perhaps a telephoto lens is tried, giving a focus of thirty inches or more, and the result is again disappointing on account of its flat appearance.

If, however, we use a lens of about fourteen inches focus, and look at the prints from that distance, we shall immediately find that they show pleasing perspective: that is, they appear to the eye as the original view would if looked at direct. If we close one eye, depriving ourselves of binocular perception of the difference between flat and solid, the remaining eye will see the photograph in relief, owing to the perspective being true to the original.

If the finished prints are to be framed, as might be done with 6½ by 8½ or larger, the increased distance from which they will be looked at must be taken into consideration.

A photograph which will look flat and unconvincing when held in the hand will appear quite correct if removed to the proper distance, and one which presents exaggerated perspective at a distance will look quite correct from a near point of view. The principle to be borne in mind is that the right distance between the lens and plate is that at which the print is to be from the eye.

In the case of the photography of near objects, the distance between the lens and plate will be greater than the focal length of the lens, and a specialist in such work should choose a lens of correspondingly shorter focal length.

### *Enlargements*

Enlargements offer an opportunity to the owner of a short-focus lens for increasing the distance at which his photographs will appear in correct perspective. If an enlarged transparency be compared, as described in the case of the original negative, with the view taken, it will be found that the distance from the eye at which the transparency agrees with the original view increases in direct ratio with the magnification. We thus obtain our second rule: An enlargement only appears in true perspective when the viewing distance is equal to the correct viewing distance of a contact print from the same negative multiplied by the number of diameters of enlargement.

The owner of a camera fitted with a lens of the usual focal length can therefore, by enlarging his photographs and mounting them in an album, cause them to appear in correct perspective to a person holding the album at the usual distance of fourteen inches from the eye. It will be found, however, that 10 by 12 inches is the smallest size that will suffice to correct the perspective obtained with most lenses and plates listed in makers' catalogues, and this is somewhat large for an album. If, again, we wish to frame and hang the enlargement, we must take into consideration the increased distance at which it will be viewed. Even with a 12 by 15-inch enlargement, at five feet, it will be found that, according to our perspective rules, a lens of about three

times the usual focal length will be required for taking the original negative.

It may be objected that often only a portion of the negative is utilized, and that this portion is enlarged to a much greater extent than above stated. This is quite true; but it only demonstrates the fact that the lenses usually employed are of much too short a focus for true results. It is therefore necessary to sacrifice the greater portion of the photograph in order to obtain correct rendering of perspective. Such treatment must ruin any carefully composed picture.

A few examples will serve to convey a general idea of the focal length desirable when it is intended to make enlargements from our negatives. An 8 by 10 enlargement, to be looked at from four feet away, will, if made from a 2½ by 3½-inch negative, require a lens of about 15-inch focus; from a 3¼ by 4¼, 19-inch; and 4 by 5, 24-inch lens. But in practice it would probably be found better to enlarge in proportion to the size of the original: 2½ by 3½ to 8 by 10, 3¼ by 4¼ to 10 by 12, and 4 by 5 to 12½ by 15½; in which case the focal length of the lens for all three will be about sixteen inches.

A 14-inch lens in place of the 16-inch would make the correct viewing distance 3 feet 6 inches instead of 4 feet. In the same way, for making 2½ by 3½, 3¼ by 4¼, and 4 by 5 negatives for subsequent enlargement to 6½ by 8½, 13 by 17, and 8 by 10 respectively, the enlargements to be mounted in an album, a 7-inch lens will be found correct.

Having considered the question of focal length in relation to perspective from a more or less theoretical point of view, it may not be out of place to make a few suggestions for the practical application of the theory to everyday photography. It cannot be expected that a 2½ by 3½ or 3¼ by 3¼ camera be used at a normal extension of fourteen or more inches. If direct prints are required from such small negatives, a telephoto lens, such as the "Cooke-Telar," or similar lens, might be employed where the extension is not sufficient for the back combination of the lens. But these cameras are so eminently suitable for producing negatives from which to print contact lantern slides that a 6-inch lens (or whatever the correct focal length is found to be) should certainly be fitted; if paper prints are required, an enlargement to 13 by 17 will give correct perspective. A 3¼ by 4¼ camera, with a 7-inch doublet and sufficient extension for use of a single component of the doublet, would give correct results with 13 by 17 enlargements and contact prints respectively. The same camera with 8-inch doublet would be the thing for lantern slides by reduction; contact prints from negatives taken with the 16-inch single component would also be suitable for an album; while enlargements to 10 by 12 would look well framed. But the ideal camera for all types of work, on the basis of this theory, is undoubtedly a 6½ by 8½ fitted with a 14-inch doublet, and having sufficient extension for the use of the 28-inch single lens. Direct prints from the negative are suitable for an album. Lantern slides by reduction (to 2 by 3 inches) will be in correct perspective at the distances given for 6-inch contact slides. Photographs with the single lens, enlarged to 13 by 17 or 8 by 10, will appear in correct perspective at 4 feet 8 inches and 6 feet respectively—reasonable distances from which to look at a framed picture. Such a camera, in fact, meets the requirements of everyone except the wide-angle worker.—H. H. B., in the *Amateur Photographer*.

## A PHOTOGRAPHER'S TRIP TO THE YELLOWSTONE PARK

(Concluded from page 238)

A short walk and you are standing in silent admiration at the foot of the world-renowned Mammoth Hot Spring Terraces. These constitute a veritable mountain covering at least two hundred acres, the whole of which has been for centuries growing slowly through the agency of hot water, issuing from boiling springs. This as it cools leaves a mineral deposit, spread out in delicate thin layers. The water by its peculiar sediment builds as surely as the coral insect. It is also an artist that no man can equal. Its magic touch has intermingled the finest shades of orange, yellow, purple, red, and brown; sometimes in solid masses, and at other places like skeins of multicolored silk. The top of each colored strip is a pool of boiling water, radiant with lovely hues, bordered by a colored coping resembling a curb of jasper or marble. It is an extremely difficult, nay almost impossible task to represent glories of color and form seen by the eye, by symbols meant to be addressed to the ear. Reluctantly at length you tear yourself away and ere long reach the famous Golden Gate, the natural entrance to the heart of the Yellowstone. We are only nine miles from the railway depot, yet we are 2000 feet nearer the sky and over 7000 feet above the sea. The golden portals slowly open, revealing a broad valley circled by lofty mountains, from which we are inclined to believe with the Indians one could obtain a view of Paradise. Shortly the roar of the Black Growler announces Norris Geyser Basin. This area of volcanic action is full of vats of boiling water and holes from which come overpowering sulphur fumes. You walk perhaps half a mile on planks so narrow that a single misstep would result unpleasantly indeed. Although the men in our party gloried in it and tarried long in their investigations, personally I was glad to place my feet on solid ground and leave behind this roof of the infernal region.

To attempt anything like a detailed description of the geyser basins would consume much space. There are thousands of objects of interest, any one of which in other localities would attract marked attention. We hasten on to the Upper Basin—the home of mightiest geysers—the loveliest quiescent pools and springs known to man. We witnessed a peculiar phenomenon while watching the Riverside. This geyser, as its name indicates, is close to the edge of Firehole River, and when in action throws a beautiful arching column to the height of a hundred feet, the entire outburst falling into the river. As the eruptions occur every eight hours, we witnessed it first in the glare of day and later by moonlight. Believe me or not, so clear are the moon's rays in this high, rare atmosphere, that there danced in the leaping waters a brilliant lunar bow. You are saying, "Why I never heard of such a thing." Well, neither had we. One might remark that so often in the Yellowstone as to grow quite tiresome. While each geyser has its distinct characteristics—as the amount of water discharged, the height of the jet, the period elapsing between the eruptions, and so on—essentially they are alike. Let a description of one suffice for all. Naturally we select Old Faithful, beloved of the tourist—guardian of the valley. Any other geyser, any five other geysers, could be erased from the list better than part with Old Faithful. The Giant, Giantess, Grand, Splendid, and Excelsior have more

powerful eruptions; the Bee Hive is more artistic; the Great Fountain has a more wonderful formation; but Old Faithful is, all points considered, the most perfect of known geysers. Atom by atom, through unnumbered centuries, this geyser has built about itself a mound 145 by 215 feet at the base, 20 by 45 feet at the summit, and 12 feet high. Jeweled all over, the pools of beauty of every shape, beaded and fretted with glories of color never seen before except in sky—year in, year out, winter and summer, day and night, cold and heat, in sunshine and storm, Old Faithful every seventy minutes sends up its silvery cascade to the height of 150 feet. This continues apparently undiminished for seven minutes, and in that time no less than a million and a half gallons of water are shot forth.

Rivaling the geysers in interest are the pools of scalding meteoric water. Nothing could be lovelier than the infinitely varied hues of these great caldrons, lined and decorated with exquisite ornamentation. I hesitate to attempt a word picture of the Morning Glory, a silent pool, some twenty feet in diameter. Its clear, transparent depth and remarkable coloring baffle portrayal. My favorite, perhaps, was Emerald Pool, as its name indicates the lovliest shade of green imaginable; but I could scarcely make a choice. All are exquisite—Sapphire Pool, Prismatic Lake, Turquoise Spring, Sunset Lake. The Punch Bowl is some ten feet in diameter, with a glittering rim of brilliantly colored formation, eighteen inches in height. The perpetual boiling of its contents produces a steady overflow which colors the little mound on which it rests.

Our last hour in this valley of enchantment will always be very vivid. So keen was our interest in the phenomena around us that we arose early and stole out to Observation Hill, from whose summit all the geyser basin is in full view. Alone and silent we gazed upon a scene unrivalled in the world. The tall, dark pines framed in the picture; clouds of vapor hung in soft masses above it; the liquid columns rose and fell unceasingly. The cool morning air made countless shafts of steam visible, which in the brighter sunlight had been unperceived.

But we find ourselves again on that long, long road cut through the piney forests and linking together with a chain of adamant the scenes of Wonderland. Presently we halt by a tiny lake that lies in a little hollow on the crest of the continental divide. With the exception of some isolated mountain peaks, it marks the highest portion of North America. "This placid sheet," says Burton Holmes, "is wooed by two mighty suitors—the Atlantic and Pacific—and undecided but impartial she bestows her favors on both alike, and when she weeps for love of both, one tear may trickle down the cheek kissed by her western lover, the Pacific, while the other salutes the outstretched arms of the Atlantic in the Gulf of Mexico." From this point onward the drive is thrillingly exciting. Our horses swing us at a spanking pace around curves and past a score of splendid points of view. How our hearts leaped when we beheld, beyond a vast stretch of pines, that famous inland sea, Lake Yellowstone, resting here like a great sparkling jewel on the summit of the continent, encircled first by forest-clad hills, then a higher rim of dark, inpenetrable mountains; beyond these, far off on the southern horizon, the three snow-capped Tetons, loftiest peaks of the Rockies! When we neared its shores we left our coach and took passage on the launch that plies its waters. We seated ourselves flat on the top—rather a precarious position, since there

was no railing whatever. But we had the advantage of an unobstructed view and the company of three German noblemen. Fifteen by twenty miles in size, embracing an area of one hundred and fifty square miles, this is, with possibly one exception in the remote Andes, the largest body of water on the globe at so great an altitude—8000 feet above sea level. The chief attraction of Lake Yellowstone in the minds of some is its fishing facilities, being frequently stocked from the government fish hatcheries with rare specimens of the finny tribe. While I cannot boast of any catch myself, I surely relished those brought in by others of our party.

Leaving the Lake, the route is down the Yellowstone River. For a distance of some twenty miles the river glides through a peaceful, sunny valley. Suddenly it rushes eagerly, impetuously forward; breaks into foam, and goes thundering down into the Grand Canyon in two magnificent leaps of 100 and 300 feet. It were folly to attempt description of the six-mile drive that skirts the west canyon rim to Inspiration Point. Alighting here we climb a few steps that lead out on a platform which hangs far out over the yawning gulf. We sank down completely overcome, as there suddenly opened before us the tremendous scene of the falls and canyon of the Yellowstone. Would that I might perfectly picture the scene! But why should I essay a task that has baffled the most-gifted pens of the age—until they all, without exception, exclaim that it is beyond the power of man to put into words or paint on canvas this great and marvellous work of God? I shall never forget mother, as she leaned far out over the canyon rim, the tears running down her cheeks like rain. Her lips moved, and I bent near to catch the words: "The walls are made of jasper and the streets are paved with gold. Oh, my son! I know now the beauty of the place in which you dwell." I must confess there were few dry eyes in the party. One of our number, however, who boasted of having seen every sight under heaven worth seeing, strutted up and down declaring it was nothing, only a painted show. Someone rather rudely but justly turned on him fiercely, saying: "If you feel that way about it have the goodness to keep still." Presently we noticed Missouri backing away. Poor Missouri had not been off the farm for thirty years, but had made money and started out to see the world. Alas, too late! His eyes, so long accustomed to contemplate only corn and hogs, were dull to all other sights; and we, supposing him ill, hastily inquired, "Why what's the matter?" "Oh!" he exclaimed with a shudder, "I feel like the devil was somewhere around here." We laughed, of course, the tension was broken and we could view the panorama with greater composure. I mention these two cases to prove that unless one has the seeing eye, the grandest sights of earth are wasted upon him. Imagine a yawning gulf, twenty miles in length, two thousand feet across in the widest part; peer down and see if you can find the river, where it is one thousand, five hundred feet below. Mile after mile the walls of this mighty canyon are lined with every variety of architecture. Hundreds of Gothic spires, feudal castles with turrets, battlements, and lofty towers rise from the deep ravine. "But it is not the depth, great as it is, or the sculpturing of the walls, wonderful indeed; neither is it the falls of beauty, or the river, green and gray, foaming below, that most fascinates one. But, oh! the colors! The colors hung up, let down, and spread abroad, are all the colors of the land, the sea, the sky," exclaimed Talmage without hyperbole. The un-

derlying tone is the clearest yellow. Here shoots up a pinnacle drenched with blood; there a cliff of green; yonder a field of lavender; yet all so beautifully blended as to form a perfect whole. Says one: "It is as if the most glorious sunset you ever saw had been caught and held upon that resplendent, awful gorge." One cannot gaze into these depths without wondering what the effect would be could we survey them from the stream itself. This we were permitted to do that very afternoon. A party of five, accompanied by two guides, we made the descent over Uncle Tom's Trail, the only known path to the depths—a difficult and dangerous undertaking, attempted by but few tourists. The last few hundred feet are made hand-over-hand down a rope which the guide ties to a sturdy pine. You devoutly pray the knot is good and tight. I modestly decline to describe my costume. When it came to donning a certain style of dress or remaining behind—who could hesitate? This view was taken from the spot where we rested—you can walk but a little way in either direction. How greatly we were rewarded for all our toil and trouble! You have seen Niagara. Imagine, then, a falls three times its height and in my humble opinion lovelier far.

The following day, on horseback, we made the ascent of Mt. Washburn. A more stirring experience would be hard to imagine than the eleven-mile ride from the hotel to the summit. Galloping over occasional smooth stretches, now scramblimg up rock steps, for a moment lost in the dense shade of the pine forests, then shuddering on the verge of the overhanging rocks; on and upward we wound our way, until we reached the snow-capped peak 10,800 feet above the sea. The summit affords a vast panoramic view of the entire region, hemmed in on every side by lofty mountain ranges. Far away to the southwest we detected the veritable "pillar of clouds" as they rose from the geyser basin. Off to the south we caught another glimpse of Lake Yellowstone. Here and there through the matchless landscape to our east ran the silver line of the Yellowstone River, until lost to view in the depths of the Grand Canyon lying almost at our feet.

One more picture and I close. Toward the end of day we stood on the brink of the canyon. Without warning, a summer shower broke over us. We were hastening to shelter when we were detained by a sight so rare we remained rooted to the spot, unconscious of a drenching, lost in admiration. Suddenly there was thrown by unseen hands, clear across that yawning gulf, a bridge, a bridge of seven colors, each perfectly distinct and seemingly a foot in width. A rainbow! we exclaimed with one breath. Scarcely had the words left our lips when another appeared, and yet another, until we counted eight—nine—ten, spanning the gorge as far as eye could reach! Below, the mighty canyon, whose glorious colors matched and reflected those of the heavenly arches above. A fitting climax to a trip without a flaw.

---

*Amidol-hydroquipone Developer.*—A developer in which amidol and hydroquinone are used in conjunction will be found to give particularly bright, clean transparencies or prints. It is made up in two solutions, as follows:

| | |
|---|---|
| **A** | |
| Sodium sulphite | 60 gr. |
| Amidol | 15 gr. |
| Water | 6 oz. |
| **B** | |
| Hydroquinone | 6 gr. |
| Sodium sulphite | 90 gr. |
| Water | 1½ oz. |

For use, take 1 ounce of A, 33 minims of B, and 1 ounce of water.

## TO AMERICAN MANUFACTURERS AND PRODUCERS

You are invited to file with each American Consulate a statement respecting the lines of goods you have to offer to foreign buyers.

Heretofore American manufacturers have had the privilege of filing catalogues in the Consulates, but the diversity of size and form of catalogues and other printed matter thus far filed, and the filing of this printed matter in English in Consulates requiring other languages, has entailed unnecessary time and expense in clerical force, correspondence and translation work in the Consulates. It is now proposed to obviate these disadvantages by asking each manufacturer to prepare a brief of his catalogue or printed matter according to card index specifications, these cards to be classified in card index files, under proper headings, and to print same in the various commercial languages.

The importance to American commerce of this coöperative plan arranged between the Department of State and The Commercial Bureau Company for placing with each American Consulate an Encyclopedia of the Industries of the United States, can scarcely be overestimated. It is the perfection of system whereby the manufacturer, through the American Consular Service, may reach all the more important consumers of his products throughout the world.

The system permits of additions and corrections being sent at regular intervals to the Consulates' files, so that they are at all times a living, growing, and up-to-date directory, of American industries such as is impossible under any other plan or method. To make the work comprehensive and valuable to each, it is essential that the coöperation of all manufacturers and producers interested be secured.

The classification, compilation, and distribution of the cards in cabinets is the work of The Commercial Bureau Company, which, in accordance with arrangements with the Department of State, Washington, D. C., is done without charge to the manufacturer. Full particulars will be given by The Commercial Bureau Company, 50 Church Street, New York City.

## BOOKS RECEIVED

*Abroad With the Fletchers*. By Jane Felton Sampson. Illustrated from photographs taken by the author; 368 pages, decorated cover and map. Boston, L. C. Page & Co., 1911. Price $1.60 net.

An addition to the *Little Pilgrimages'* series. Setting out from Boston, the author takes us on a journey through the Mediterranean, Italy, Switzerland, Germany, Holland, Belgium, France, England, and Scotland, describing all the sights worth mentioning en route. The Fletchers, who lend their name to make the title, a prosperous farmer and his wife from "Out West," are members of the author's party and their original remarks on the many unusual sights that greeted their untraveller gaze constitute the amusing part of the trip. Castles, churches, art galleries, etc., on the route are all described and the whole enlivened by

Mr. Fletcher's asides to his wife in a broad Western dialect. The book has numerous illustrations made from photographs by the author. If you do not have the opportunity to take a trip to Europe, you can make it with the Fletchers and get some original descriptions of world famous places and pictures.

The North Eastern Railway, of England, issues a series of booklets on *Where to Go and What to Take*, of which they have just sent us numbers 3, 4, and 5, being *Old Castle Barnard; York, the Minster City; Ripon and Fountain's Abbey*. The descriptions of these fine old world cities are from the pen of Mr. H. Snowden Ward, and the pictures by Mrs. Catharine Weed Ward, and both have succeeded well in creating a desire to see and know more of these delightful places. They are another example of the possibilities of photography in advertising.

*One Hundred Practical Advertisements for Photographic Studios*. Originated and published by Abel's Publications, Cleveland, Ohio. Price, $3.00. With rights to use the advertisements as specified.

Though there is but one page of reading matter in the whole hundred and four pages in this book, it will easily become one of the most popular if not the best seller of the year among photographic books. For this book of one hundred advertisements, which Mr. Abel has provided, the thousand and one photographers who have to cudgel their brains for advertising copy, will surely rise up and bless him. Here is provided for every season of the year a series of carefully worded and cleverly set up advertisements. All you have to do is to tear out the advertisement that meets your want, and hand it to your printer to duplicate, and he cannot make the mess of it he would if left to his own ideas of composition.

There are advertisements for use in newspapers, for showcase cards, postals, and reading notices, etc. Various shapes and sizes and for every season, and include small all-the-year-round ads. Beginning the Year, General, Children, Easter, Spring, Convention Time, Graduation, Copying Old Prints, Lincoln's Birthday, Rainy Weather, Home Portraiture, Bridal Picture, Color Portraiture, Christmas, and New Year. The busy man will find the book a great time saver. The man with more time will find it a book of suggestions from which he can build individual and compelling advertisements. It is the most practical money-maker that has been offered in years. Every photographer needs it. The price is $3.00 postpaid, or less than three cents per advertisement—ridiculously low when you stop to figure out how much you would have to pay an expert for ten advertisements. Copies will be mailed from this office on receipt of price.

## TRADE NOTES

G. Gennert, New York and Chicago, the American agent for Ensign Films, reports a remarkable instance of the excellent keeping quality of Ensign Films. A customer sends in, under date of May 13, a picture taken on an Ensign Film roll purchased in the spring of 1909 and marked to expire August, 1909. Although exposed May, 1911, when the film was two years and nine months old and one year and nine months after the guarantee had expired, the entire roll gave perfect results which could hardly be told from absolutely fresh stock. The extreme speed and excellent orthochromatic quality of Ensign Films, added

to the above indisputable keeping quality, make it a most desirable film for the explorer or traveller, who must have an ample supply of films but may not use them up immediately. The Ensign Films now on sale are guaranteed until the fall of 1912. Surely this is an advantage not to be overlooked.

---

BAUSCH & LOMB OPTICAL CO. wish to get in touch with the owners of their Portrait Unar. Users of this lens are requested to send samples of work done with it to the Company, addressed to Department AA.

---

SPECIAL thanks are due H. T. Morton, of Birmingham, Ala., for having placed on the market Morton's Print Curver. To the present day photographers using developing papers it is as great a convenience as was the burnisher of other years. The one great trouble with developing papers is their tendency to curl inward, as curl they will. The Morton Curver offers the quickest and best method we have yet seen for taking the cockle and curl out of a print and giving it the desired curve for mounting. You cannot damage the prints and you can handle more prints in less time than any other method. The price of the No. 1 curver, for eight-inch prints, is $1.50; the No. 3, for twelve-inch prints, is $2.00; the No. 4, for sixteen-inch prints, is $2.50, obtainable at your dealers or direct from H. T. Morton, Nineteenth Street and Second Avenue, Birmingham, Ala.

---

FROM Raines & Co., Ealing, London, England, we have received copies of their booklets on *Enlarging*, *Pictoral Photography*, and *Photography in India*, all clever examples of good advertising matter. Raines & Co. is perhaps the largest firm of enlargers and finishers in Great Britain, and have a reputation for turning out the highest grade of work. Any of our readers visiting the Old Country would do well to leave their films with them for developing, printing or enlarging. The booklet *Photography in India* will interest the man who is doing photography under tropical conditions and copies would doubtless be sent on request.

---

AMONG the many improvements in apparatus we would especially call your attention to the Sylvar Camera. The Sylvar Camera is surprisingly small, so small in fact that it can be carried in the pocket; yet it makes pictures postalcard size full of detail, life, and snap, so that enlargements can be readily made from them equal to contact prints. The Sylvar is very dainty and complete in every detail, fitted with the Sylvar anastigmat lens and the compound shutter, capable of making exposures $\frac{1}{100}$ of a second. With this lens, shutter, and double-extension bellows a very wide range of work is possible. For full particulars ask your dealer or write to G. GENNERT, 24-26 E. Thirteenth Street, New York City, or 212-216 State Street, Chicago, Ill.

---

HAVE you tried the new Defender Orthochromatic or Defender Non-halation plates? They are the latest product of the factory that makes the Vulcan Dry Plate and possess all the good qualities of the Vulcan plus some extra qualities of their own. You get unusual color value with the one and cut out all halation with the other. They are well worth trying.

---

IF you are looking for speed in a plate the Seed 30 Gilt Edge, with twice the speed of Seed 27, will fill every requirement as to quality, gradation, and fineness of grain. For difficult subjects in the studio they have no equal. At your dealers.

---

MANY films, plates, and great quantities of paper are spoiled each year through poor chemicals and ignorance of how to compound developing solutions. Everyone, to avoid such losses, should have a copy of *Hauff on Modern Developers*, a booklet on developing formulæ, how to make and use them, and much other useful information. Send to G. Gennert, 24-26 E. Thirteenth Street, New York City, or 212-216 State Street, Chicago, Ill., and a copy will be sent you free of charge.

---

WE think that secretaries of photographic associations would do well to be moderate in their language when seeking advertisements for their official program. We have before us a letter from a secretary of an old established association, the last sentence of which reads: "Last year we did not bother you for an ad, so we feel we have a right to insist this year." Since when did associations, photographic or otherwise, get the right to insist on manufacturers and dealers paying for their programs in the shape of high-priced advertising space? The manufacturers have in the past supported the associations very handsomely, but it will be better not to insist on their support by a veiled threat.

---

WE have just received the following from President Harris:

"I wish you would place somewhere in your notices, in the next issue, the fact that the Northern Steamship Company has a boat leaving Buffalo every Saturday night at 9 o'clock for Duluth, with a direct connection by railway to St. Paul, arriving every Wednesday morning.

The round trip from Buffalo to St. Paul will be $37.50, while just one way will be $21.25.

Rooms holding three people are $15.00, and single berths range from $4.50 upward. Of course meals are extra.

The address of this company is "The Northern Steamship Company," 1184 Broadway, New York.

I am sure many Eastern photographers will be interested in this arrangement

# WILSON'S PHOTOGRAPHIC MAGAZINE

A MONTHLY MAGAZINE FOR PRACTICAL PHOTOGRAPHERS

Founded in 1864 by EDWARD L. WILSON
MRS. EDWARD L. WILSON, Publisher and Proprietor
L. WINIFRED WILSON AND T. DIXON TENNANT, Editors

EDWARD L. WILSON, 122 EAST TWENTY-FIFTH STREET, NEW YORK
*Entered at New York Post-office as Second-class Matter*

Yearly subscription in advance, United States and Mexico, $3.00; Canada, $3.25; Foreign Countries, $3.50. Single copies, 25 cents. Subscriptions begin with current issue unless otherwise ordered. Original manuscripts on photographic subjects are solicited, and, if accepted, will be paid for on publication.

## EDITORS' TABLE.

OUR frontispiece this month, the splendid portrait of Professor Draper, whose centenary has just been celebrated, is reproduced from a steel engraving by John Sartain, the noted Philadelphia artist, who brought steel engraving to such a high state of perfection. The half-tone process unfortunately does not reproduce the delicate gradations and modelling found in the original.

---

THE Metropolitan Section of the P. P. Society of New York held its annual meeting, at Keen's chop house on Tuesday, May 2, 1911.

The Secretary-Treasurer's report showed that the year just closed has been the most successful since the organization of the Society.

The principal work of the evening was the election of officers for the year 1911-12. The present officers declining another term, nominations were made, and the following received the majority of ballots cast and declared elected: B. J. Falk, chairman; I. Buxbaum, secretary-treasurer; executive committee: Pirie MacDonald, 1914, and Oliver Lippincott to fill out the unexpired term of B. Frank Puffer.

With Mr. Falk at the helm for the coming year there is no doubt but that all the members will get together and try to make this year even more successful than the year just closed.

A. C. KALT, *Secretary-Treasurer.*

---

MR. S. AUNE, of Portland, Oregon, had a specially fine loan exhibition of portraits at his studio during the first two weeks in May. Pictures were sent in by such representative men as Hoyt, Towles, Townsend, Parrott, Edmondson, Hayes, Beach, Lewis, Knaffl Bros., Feldman, Camp, Stein, Field, and Harris. Such a splendid array of portraiture cannot fail to do good work for the better advertising of photography, not only for the particular studio holding the exhibition, but for all photographers, and the photographer who goes to the bother and expense of getting together such a collection deserves the thanks of every professional photographer.

PHOTOGRAPHERS' ASSOCIATION OF NEW ENGLAND.—Present indications point to a large attendance and a most successful convention in Bridgeport, September 12, 13, 14. Much enthusiasm has already been shown by our members and by photographers outside of New England, and President Garo has received many letters from prominent men promising hearty support as well as specimens of their work. The local photographers are planning many features of a social nature which will materially add to the interest and attraction. The water features of Bridgeport are of the best and offer unusual facilities for pleasant trips along the coast. The "Armory" embodies all the requisites of a convention hall, with its well-lighted ample space and convenient location as to hotels and railroad station. The N. E. and Trunk Line Railroad Associations have granted the usual reduction of fares for this occasion, and it will cost only one and three-fifths of the regular fare, and that means a help to all attending. The usual prizes for exhibits are to be omitted this year, but an Inter-state Class will be formed, the entries will be passed upon by a competent jury, and the resultant decision placed upon the records. The manufacturers and dealers have shown their usual foresight and interest, and, alive to their opportunity for displaying the accessories and appliances necessary in every up-to-date studio, have arranged for abundant floor space.

GEORGE H. HASTINS, *Secretary.*

---

PHOTOGRAPHERS making their plans for the convention at St. Paul, July 24 to 29, should not fail to consider the advisability of making the trip to the Yellowstone Park which is being organized by the Northern Pacific Railroad and the officers of the National. While as far West as St. Paul the Yellowstone Park is within comparatively easy reach. An unusually good time is promised by the promotors at a very reasonable cost. A splendid chance to see Uncle Sam's most beautiful park—unequalled the world over.

By Ruegge Milwaukee

# WILSON'S PHOTOGRAPHIC MAGAZINE

FOUNDED IN 1864 BY EDWARD L. WILSON

VOL. XLVIII JULY, 1911 No. 655

## AN UNPARALLELED CONVENTION

TAKE it as an actual provable fact, the men who have made a success of photography both artistically and financially have been Convention men. Men who have attended these affairs for years will tell you of young photographers whom they have seen go to their first convention—green, unskilled, not possessed of much money, but eager to learn, and after a few years these same young photographers are seen as leaders of affairs, with prosperous businesses of their own and all due to their belief in the Convention as an investment.

This year's National Convention is almost without a parallel in the grade of instruction it has to offer you. Dührkoop and his daughter, the leading photographers of Europe, to show you their methods—not merely to talk to you, but to show you under the skylight with ordinary people for their subjects, just how they got their wonderful pictures. Don't say that the kind of work they do cannot be done in *your* studio. Maybe it cannot, or maybe your class of trade would not want must that sort of picture, but you can apply their ideas to your needs and improve your work, for no matter how cheap your trade, your best efforts are none too good. Even the poorest class of trade will pay something more for something better.

Then lectures by Alyn Williams and Leslie Miller. There are two men who rank very high in England and this country for their expert knowledge of art and their ability to impart their knowledge. Their talks will show you how the lessons of the great masters of art can be applied to photographic portrait making. William H. Rau will tell all about commercial photography and its possibilities, and he will show you the many opportunities that lie around you for making money with your camera. Juan C. Abel, who has made a study of studio advertising, will tell you how to get the people in touch with your studio, and show by lantern slides good and bad styles of advertising. The photographer is too apt to let well enough alone and wait for customers instead of going after them.

Then the exhibition. Of course, you

will exhibit with others, and the mere fact that you are going to send your best work will make you do better work all along the line. The extra effort you have to put into your exhibition pictures will have its effect on the work you give your customers.

The many entertainments provided at the Convention will only help to make your stay in St. Paul the more enjoyable, and if you want a little further recreation you can take in the trip to Yellowstone Park, which will start immediately after the Convention, and which is arranged especially for members of the Association.

## PHOTOGRAPHERS' ASSOCIATION OF AMERICA

### Thirty-first Annual Convention, St. Paul, Minn., July 24 to 29, 1911

*The Twin Cities, St. Paul and Minneapolis*

THESE cities, located on opposite banks of the Mississippi river, ten miles apart, are two of the most progressive and interesting cities in the country. While our convention will be held in St. Paul, the photographers and citizens of Minneapolis are equally interested in making our stay in the northwest a pleasant one and are working with St. Paul to show the photographers an example of genuine northwestern hospitality. The cities are comparatively new and will be a revelation to many of our eastern men.

*The Armory*

This is an immense structure and practically the entire building has been placed at our disposal. The picture exhibit, the business meetings, the demonstrations and school, the lectures, the manufacturers and dealers will all be cared for in this one building. It is centrally located and is accessible from all hotels.

*The School*

The instructive demonstrations will be conducted by and under the personal direction of Rudolph Dührkoop, the eminent German photographer, of Hamburg, Germany. Herr Duhrkoop is a master photographer and it will be worth a long journey to see this man work.

*Lectures*

A series of lectures and talks is being arranged to be given by men who are leaders in their particular field of endeavor and your board feels that this feature will eclipse any program yet offered. These lectures will cover both the technical and artistic side of photography as well as the business-getting side. All, good practical information.

*Picture Exhibition*

The exhibition of photographs will be a complimentary one, no prizes of any description being offered. In addition to the three prints that are asked for from each photographer, several special collections are being arranged which will make this department the most instructive and interesting ever shown.

*Congress of Photography*

The Third American Congress of Photography will be held in conjunction with the St. Paul convention. This body is composed of delegates

from about twenty of the largest and most progressive state associations in the United States and through this body of prominent and intelligent photographers from all sections of the country come ideas and suggestions for legislation relating to the betterment of conditions for those engaged in the practice of photography. The Congress promises much for us.

### *Women's Federation*

The ladies will be with us again this year, with a larger and better exhibition than the last one. The educational and social benefits to be derived from association with these progressive and earnest women are so varied and great that no lady photographer can afford to miss one of these annual meetings. Women photographers are urged to communicate with the secretary of the Women's Federation, Miss Maybelle Goodlander, Muncie, Ind.

### *Entertainment*

The local entertainment committee of the Twin Cities has a very large sum of money in hand for the entertainment and pleasure of those who attend the convention. In fact they asked for more time than could be allowed them. We can assure those who attend that there will be entertainment for every spare moment.

### *Excursion*

Arrangements have been made with the Northern Pacific Railway Company for a personally conducted excursion to Yellowstone National Park, leaving St. Paul at the close of the convention on a special train. Low rates have been named and will include transportation, sleeper accommodations, meals *en route*, and all expenses, including hotels at the park. This trip is optional, but it is hoped that a great many will take this opportunity to visit one of America's wonder spots.

### *The Manufacturers and Dealers*

The display of manufacturers and dealers will occupy the main drill floor of the Armory. Exhibitors will be furnished uniformly decorated booths. This arrangement will make it less expensive and easier for exhibitors to show their wares and at the same time it will make a more attractive show.

### *The Annual*

The *Association Annual* for 1911 is already in the hands of the printer. It is going to be a number that will equal if not eclipse the efforts of last year. Remember, the *Annual* is given only to members who pay dues—one copy for each membership. Pay early and have your copy mailed to you.

### *Identification Buttons*

When a member pays his dues, in addition to his regular membership button and official receipt, he is given an "Identification Button." This is of white celluloid bearing a number to correspond with the number on his receipt. Be sure and bring this button and wear it at the convention. Printed lists will be prepared and given out at the box office, containing the name, address, and receipt number of each member who has paid dues. With one of these lists members can readily identify anyone present. *Do not forget to bring and wear your button.*

### *Dues*

The constitution of the P. A. of A. was amended at Milwaukee last July so that the membership fee is now $2.00 and the Annual dues $3.00. Members of affiliated associations pay

no membership fee and but $2.00 per annum dues. Any owner, part owner, or manager of a studio is entitled to active membership; he can join the association either directly or through an affiliated organization. Employees, manufacturers, and dealers or their representatives take out *associate* membership and pay dues only, $2.00 per annum.

An active member, or one who is eligible to active membership, who is a member of some affiliated association, must present his membership card (signed by treasurers of both his state association and the P. A. of A.) when paying dues or taking out new membership in the National. Please remember this card is valuable and that you must present it to the treasurer of the P. A. of A. if you save membership fee or extra dollar for dues. These cards are furnished you by your State treasurer.

### *Rules Governing Exhibitors*

1. Exhibitors are requested not to exceed three prints in their exhibits—no other restrictions.

2. The association will not be responsible for any loss or damage to pictures in its charge, but special precaution will be taken by the committee to insure the safe return of all exhibits.

3. No exhibits shall be removed from the hall until after the close of the convention. Exhibitors who desire to personally take charge of or remove their exhibit may do so only by permission of Ben Larrimer, Chairman of the Hanging Committee.

4. Application for exhibition space must be made to First Vice-President, Ben Larrimer, Marion, Ind.

5. All exhibits must be sent prepaid to Ben Larrimer, First Vice-President, St. Paul, Minn., care of St. Paul Armory, and must reach St. Paul on or before July 18, 1911. Any exhibit not having express charges prepaid will not be accepted.

*Detailed information, including complete program, will appear later.*

### *Hotels and Rates*

The Saint Paul (headquarters) European, $2.50 per day and upward.

Merchant's Hotel, European, $1.00 to $2.50 per day.

Hotel Jewell, European, $1.00 to $2.50 per day.

The Frederic, European, $1.00 to $2.50 per day. $1.00 added for second person in room.

Hotel Northern, European plan, 50 cents to $1.50 per day. American plan, $1.50 per day and upward.

Hotel Foley, European plan, 75 cents to $1.50 per day. American plan, $2.00 to $2.50 per day.

Hotel Euclid, European plan, $3.50 to $12.00 per week.

Hotel Magee( Stag Hotel), European $1.00 to $2.00 per day.

Additional hotels, all prices, will be found at Minneapolis, 10 miles distant W.P.M., 87 10:30 6-26-11 Clayton via trolley with frequent service and 10 cent fare.

### *Application Blanks*

Mr. L. A. Dozer, Treasurer P. A. of A.,
Bucyrus, Ohio.

I hereby apply for membership in the Photographer's Association of America.

I am owner
manager
employee
manufacturer
dealer
representative

Enclosed find $2.00 membership fee and $3.00 for one year's dues. (If

check is sent add 10 cents for collection.)

Name
Street
City
State

If you are a member of an affiliated state association, only $2.00 yearly dues are called for, (no membership fee), provided membership card is shown.

Mr. Ben Larrimer, First Vice-President P. A. of A., Marion, Indiana.

I will exhibit three pictures at the St. Paul convention July 24 to 29. Please reserve space for same.

Name
Street
City
State

## THE CONGRESS OF PHOTOGRAPHY. IS IT CLEAR TO YOU?

EVERYONE knows how successful the Congress has been up to this time. The bond of unity which it has brought about between the State societies alone would make it a success.

The hope and aim is that we will be able to gather the rest of the societies under this one fold, so that more efficient work may be done for the improvement of photography.

We started out simply as an auxiliary, or ways and means committee, to the National. That was a good start, but today a new work appears for the Congress.

I am thoroughly won over to the idea that the division of the work for the photographers of America should be separated thus: the educational, including lectures and entrtainment features, to the National. Business and politics to the State organizations.

In other words, the school of photography, demonstrations, and all entertainments should be conducted in open convention. The Congress should decide on the politics, the place of meeting, the selection and election of officers, and all of the business to be transacted for the Association.

The condition that now exists in the Congress makes it unfair for those States which are not members of the Congress. After careful consideration, therefore, and consultation with the officers of the various State societies (and, by the way, I have attended nearly every State convention that has met this year, so far), I believe the best way to get a fair representation is to do away with the per capita tax.

Let every State be represented by two photographers who will be considered members of the Congress. That is, let the Congress be the senate of the American photographers.

Where there are two State societies, as is the case in Ohio and Michigan, let each society send one delegate. In this way we would get a fair representation, for it would cost nothing to become a member of the Congress, and a State would have no excuse for not joining.

Each State, whether on the Atlantic or the Pacific coast, farthest north or farthest south, would only have to select some one from their State attending the National, and he could be designated as their delegate.

These men would come as the representatives from State photographers, duly instructed no doubt, to thrash out questions of importance to the profession, and to work and vote for whatever is for the best interests of the National Association.

To illustrate how much good would

come from such a plan, I have found three different States instructing its delegates to go to the Congress this year and work for a plan to draw a perpendicular line through the United States running north and south, dividing the East and the West to insist that the National Association conventions must alternate each year on both sides of that line.

When I suggested the foregoing plan at the various State conventions I was surprised to note that the majority were heartily in favor of it. I firmly believe if you would put your organization on the State basis representation, all business to be handled in the Congress, leaving to the open convention instructions and demonstrations of all art and science subjects, as well as entertainments, the results will be doubled even the first year.—G. W. HARRIS, Pres. P. A. of A.

## FOURTEENTH ANNUAL CONVENTION AND EXPOSITION PHOTOGRAPHERS' ASSOCIATION OF NEW ENGLAND

### Bridgeport, Conn., September 11 to 14, 1911

*Exposition Grounds*

THE whole of Steeplechase Island, one of the best-known pleasure resorts on the Atlantic coast, has been leased for the Convention. The photographers and their guests will own the entire island. All of the great buildings will be transformed for the week into photographic studios, shops, and art exhibits. The Art Building, a great crystal palace occupying 10,000 square feet of space, will be filled with what promises to be the most comprehensive display of photographs ever made in America. Besides the great

EXECUTIVE BOARD OF THE P. A. OF NEW ENGLAND

| GEO. H. HASTINGS | F. A. FRIZZELL | J. P. HALEY | J. H. GARO | W. H. PARTRIDGE |
|---|---|---|---|---|
| Secretary | 1st V. P. | 2d V. P. | President | Treasurer |

exhibit to be made by the members there will be individual exhibits from one hundred of the most famous American photographers, to which will be added collections from prominent organizations all over the country, including the Professional Photographers' Club of New York, the Metropolitan Section, P. P. S. of New York, the Photo Pictorialists of Buffalo, the E. S. Curtis series of Indian pictures, the Lumiere color plates, the Boston Camera Club, and other world famous photographic bodies.

### *Industrial Exhibits*

Every prominent manufacturer of photographic supplies, apparatus, and accessories will be represented at the Exposition. The preliminary demand for space has broken all former records, and when the lists are finally closed practically every inch of the island not used for actual Convention purposes will be covered with displays of photographic goods. Many of the manufacturers will occupy entire buildings, and the space at the disposal of the Executive Board is so great that every exhibitor will be given ample opportunity for the display of his wares. Demonstrations of plates, paper, chemicals, printing machines, artificial lighting plants, flashlight apparatus, cameras, lenses, and accessories will be given during the entire progress of the Exposition, and there will be no crowding, no hot and stuffy quarters—fresh salt air and green trees instead.

### *The Gymhanka*

With plenty of music and all of the amusement devices at the disposal of the members, the entertainment committee has planned a joyous time after the business is over for each day and night. Joy rides, ferris wheels, flying-machine trips, and all of the happy laugh-factory hurrah stunts of Coney Island will be balled up in one great big festival of goodnatured carnival which will bring to the oldtimers memories of the splendid days of Celeron, and create a new enthusiasm in the ranks of the youngsters. Wives and sweethearts will once more be welcome in the councils of the photographers, and when the myriads of lights flash out on the first night of the Exposition the man who brought his women folk will be the envied of the wise men. And the man or woman far removed from the sea who does not come prepared for a dip in the rolling surf, or fails to bring the old fishpole, will be an outcast from the elect.

### *Souvenirs*

No exposition is complete without souvenirs, and when the boys and girls get to Bridgeport there will be one continuous round of souvenir collecting. This is the first big Convention and Exposition Bridgeport has had in several years, and the people of this fast-growing city—the industrial capital of Connecticut—are preparing to send their visitors away, as did Sinbad the Sailor, loaded with presents. And the photographic manufacturers will do their share, so leave plenty of room in the grip.

### *The Hotels*

Bridgeport has every kind of hotel, and the prices are so reasonable that it will be cheaper to come to Bridgeport for a week than to stay at home. Here is a table of prices. Look it over carefully:

The Stratfield (headquarters). Modern, fire-proof, class A European hotel. Three hundred rooms with bath. Prices, single person, $1.50, $2.00, $3.50, and $5.00; two persons same room, $3.00, $3.50, $4.00, and $6.00.

Three-fourths of the rooms will go at the lowest prices quoted.

Atlantic Hotel. Modern hotel, American plan exclusively. Cuisine of the best. One hundred and seventy-five rooms. Prices per day, single person, $2.00 and $2.50; two persons same room, $3.50 and $5.00. All prices include meals.

Arcade Hotel. European only. Fifty-four rooms. Prices, $1.00, $1.50, and $2.00.

Royal Hotel. European only. Fifty rooms. Prices, $1.00, $1.50, and $2.50.

Hotel Atlas. Turkish bath hotel. Fifty rooms. Rooms including bath, $1.50.

Golden Hill Hotel. Forty rooms. European, $1.00 to $2.50.

Aster Hotel. Thirty-five rooms. European, $1.00 to $2.00.

Hotel Amazon. Thirty-five rooms. European, $1.00 to $2.00.

All of these hotels will reserve accommodations for you, and to make sure that you will be cared for, write today, giving full information as to your arrival, the number in your party, and what you wish to pay.

Full particulars with reference to the picture exhibit, in which you are expected to be represented, will be given in our next issue. Dues are now payable—send today.

President: J. H. Garo, 747 Boylston Street, Boston, Mass. First Vice-President: F. A. Frizell, Pierce Square, Dorchester, Mass. Second Vice-President: J. P. Haley, Broad Street, Bridgeport, Conn. Treasurer: W. H. Partridge, 90 Westland Avenue, Boston, Mass. Secretary: Geo. H. Hastings, 37 Merrimack Street, Haverhill, Mass.

*State Vice-Presidents:* For Maine—L. G. Gerry, Sanford, Maine. For New Hampshire—H. H. Langhill, Hanover, N. H. For Vermont—A. Allyn Bishop, Newport, Vt. For Rhode Island—B. C. Horton, Providence, R. I. For Connecticut—G. S. North, So. Norwalk, Conn. For Maritime Provinces—J. Y. Mersereau, Chatham, N. B.

## THE INDIANA CONVENTION—WINONA, IND., JULY 10 TO 13

DECIDE today that you will attend this year's big convention. This year you will get two dollars' worth for one—two ordinary conventions in one big one.

*Be a Booster.* Tell your competitor why he should attend. Write "photographic friend," tell him to meet you there. It is very important that every photographer in Indiana attends this meeting. Some very important things will be thrashed out—for the good of our profession.

We sure have got the program this year that you and he and I have been needing for this long time.

First, I want to impress upon your mind that this convention is strictly a business convention: How to get more business; how to keep this business; how to advertise our business; how to make money. That's what we all need.

When it comes to running a studio successfully, systematically, and in a business-like way, we must all concede that we as a whole do not rank as high as our sister professions. There is something wrong, and we are going to find out what that is.

We need your help, your presence. So now make all your arrangements to

meet this jolly bunch of boys that are doing the same work that you are—only probably in a different way—all having his particular way of doing this or doing that. Come and talk your troubles over. Keep your eyes and ears open, and you'll go home with some very valuable dope.

If you will use only one of the many ideas that Mr. Harris, Mr. Abel, or the other demonstrators that are coming, with their sleeves rolled up, will give, you will be well repaid for your little outlay. Then think what it means in meeting the largest per cent. of your brother photographers in Indiana, all having their little "say," all working for one thing in common—"better pictures" and "more money!"

Next after the business, I want to impress on you that we have not forgotten the fact that to do a successful photographic business we must know how to deliver the goods—how to make pictures that will sell. This will be left in the hands of such people as Sykes, Towles, Mrs. Sykes, Holloway, Larrimer, and others that have promised to help. These people need no introduction, I only ask you to read the Year-book when it arrives. This will be the greatest opportunity our association has ever had to see this class of workmanship demonstrated. Each demonstrator is in a class by himself—each working in a different style. You just can't afford to miss this.

We are pulling off a new stunt this year. We have named it "Competitive Negative Making." We look forward to it as a great success. To explain this new feature, I want to tell you first, that we have an up-to-date sky-light room, all recurtained, repainted, and refit with all the new and up-to-date accessories and apparatus. This equipment is valued at over $1000, all having been donated to the Daguerre Memorial Institute by many of the kind and generous dealers and manufacturers of our country. In this thoroughly equipped skylight room we will have these competitive negative classes. A certain number of minutes will be allowed each contestant. Each contestant will have his choice of plates, have the same model, all working with no one to look on, unmolested, trying to get his best results out of this same subject. Each contestant will develop his own plate in our newly equipped dark room. He will number his negative and place it in the display rack to be judged and criticised. This negative will be taken home with him and finished as he thinks best and exhibited next year with the rest of the finished pictures. This will give you an unlimited amount of information and should prove very valuable.

Out-of-door contests will be carried on along the same order. Each contestant will have the satisfaction that he has the very best lenses and cameras on the market to work with.

Does this mean anything to you? It certainly should when photographers from many different States are writing and telling that they will join us.

*All Eyes Are on Indiana.* Four officials of four other State associations have written that they are making preparations to meet with us and bring exhibits. This year's meeting means something. It's two in one. Why should it not be greater?

*Get Busy.* Make up your exhibit, the time is drawing near. *Start now* and send it in good time. If you did not receive the rules and regulations, drop me a card, and the next mail will bring it. By comparing your work with others is how you see the strong and weak points.

*The Diamond Medal Exhibit* attracts attention all over the world; it brings

the best pictures from every State in the Union to our doors to be studied and admired. This year's entries will be larger than ever. This alone is worth all the time and money you spend to see. Don't miss it.

The floor space is practically all taken, the manufacturers and dealers are all coming to Indiana this year, exhibiting everything new in their lines.

In a few days the 1911 *Year-Book* will be sent to you. Study the program and you will decide you cannot afford to miss this convention. It means so much to you. It's just the kind we have all been needing. It will pay you to lock up your shop and borrow the money if necessary. Bring your wife and your printer and join the crowd. If you attend this convention, it's bound to tell on your work. Your friends will notice the "new ideas," if you will bring your notebook and take home with you only one or two new things and then practise them.

Hotel rates are very reasonable. Good rooms and board can be had at $1.50 per day; many places are only charging $1.00. Headquarters will be made at the "Inn," at a special rate of $1.50 per day.

You have no excuse for not attending this year. I hope that I'll have the pleasure of seeing you there, with an exhibit.

Remember the dates, July 10, 11, 12, 13.

E. K. Shalley,
Berne, Indiana.

## THE PHOTOGRAPHIC DECORATION OF GLASS AND PORCELAIN

The decoration of glass and porcelain by photographic means is readily attainable by certain processes, but to secure vitrified photographic images involves difficult and somewhat intricate processes. Where it is simply desired to make transparencies on glass for window decoration or pictures on opal for framing, the means are ready to hand, as prepared sensitive plates are obtainable commercially in various sizes, and, clear instructions being enclosed, no trouble should be experienced in getting results. Such plates will not, however, stand cleaning or washing, so that they soon either become dirty, and are damaged in attempts to clean them, or they fade and discolor. A more permanent and rather easy way of transferring a photographic image to porcelain or opal is to varnish the plate with copal, and then squeegee, face down upon it, a toned and fixed print on the usual sensitized albumenized paper while wet. It is allowed to dry for about four hours and then the back of the paper is moistened with a damp sponge, when it can be peeled off, the albumen adhering to the varnish. This should then receive a protecting coat of varnish.

Another method is the carbon process. Carbon tissue, a paper coated with gelatine mixed with pigments of various colors, may be purchased ready sensitized. It is exposed under a negative soaked in cold water, and then squeegeed to the glass, or opal, or porcelain support, which should previously have been coated with a thin sizing of gelatin (1 ounce in 18 ounces of water, with 20 grains of bichromate of potassium dissolved in 2 ounces of water added). The plates, after being coated with this mixture, are allowed to dry in the sun or in a strong light. Development is effected

with warm water, the gelatine washing away in proportion to the action of the light, that unacted upon being completely washed out. When dry a very perfect picture is left, and it is permanent so far as the fading action of light is concerned, but still susceptible to damage through moisture.

A very hard waterproof enamel picture can be made on glass, porcelain, or opal, by the following process, which has the advantage of not requiring any special appliances. Two ounces of the best gum arabic are dissolved in 10 ounces of water. Ten grains of chromic acid dissolved in a little water are added, and finally one ounce of a saturated solution of bichromate of ammonium. When the ingredients are fully dissolved and mixed, stir in as much finely powdered asphaltum as will give the solution a good body. It must be of such thickness that, when flowed on a plate, the grain appears homogeneous, and not in minute particles. The plate should preferably be coated with a whirler. If heat is used in drying, care should be taken not to make the plate hot, or the film will refuse to develop. Exposure is made under a negative as usual, and the printing will be fairly rapid. Development is effected by gently laving with water. Slightly warm water can be used if the development does not easily progress. When the image is clear in all details, the plate should be dried, and then placed in an ordinary oven on a bed of sand or plaster of Paris. Heat is gradually applied until the proper tint is reached. The resinous powder known as "dragon's blood" could probably be equally well incorporated with the gum solution so as to give a red picture.

Another simple way of forming a kind of enamel picture is to prepare a photolithographic transfer rather "full" of ink. The ready coated paper for transfers may be purchased, and is sensitized on a bath of bichromate of potassium, 1 in 20. When dried, this paper is exposed under a negative or positive in line or in half-tone stipple. The next stage is to black the film all over with a thin coat of photo-transfer ink, applied with a velvet or composition roller. On immersing the print in water, and rubbing gently with a sponge, the superfluous ink will wash away. When quite clean the paper is allowed to dry and is then trans-, ferred in the usual lithographic manner by pressure. If the picture is not too large, it may be transferred to porcelain by damping the transfer until slightly tacky, then attaching it to the object which is to receive the image, laying on top a piece of thin card and rubbing the back strongly with a burnisher, taking care that the transfer paper does not slip. Such a transfer having been secured, it should be dusted with resin, and slightly heated to make the resin tacky. Any finely powdered, vitrifiable color mixed with a little flux can then be brushed on with a soft camel's hair brush, and will adhere to the lines. The plate is then placed in a muffle furnace until the color is fused. A porcelain glaze is afterward applied to protect the image and give increased luster.

The production of purely photographic enamels is a more complicated process than any of the foregoing. One method involves the production of a collodion positive, which is transferred to the plaque or other surface, and then fired in a muffle furnace. The result of the firing is to destroy the collodion film and leave the metallic silver image. To secure richness, the image, while on its collodion support, is toned with chlorides of iridium and gold. After firing, the picture is flowed with a porcelain glaze several times, until the desired brilliancy is obtained. Such a process requires an intimate photo-

graphic knowledge, and especially of that now neglected branch, the collodion process.

For the worker who is not so advanced the following process would promise better. A solution is made up as follows:

| | |
|---|---|
| Gum arabic . . . . . | 7 drams |
| Grape sugar (glucose) . | 3 drams |
| Bichromate of potash . | 5 drams |
| Water . . . . . | 10 drams |

This solution is filtered and used as soon as possible, as it will not keep more than three days. The plaque, which must necessarily be flat, is flowed with clean water, and the solution poured on so as to drive the water before it. The drying requires considerable heat, such as applied by an oven. With regard to the printing, it must be borne in mind that a positive gives a positive and a negative a negative image. The tablet, when thoroughly dry and while still hot, is placed in contact with the positive, which must also be warmed. The printing is exceedingly rapid; in the most brilliant sunshine less than a quarter of a minute. As soon as the tablet is removed from the frame it begins to absorb moisture from the air. It thereby acquires tackiness, so that when powder of any kind is brushed on, the powder adheres in proportion to the action of the light; that is to say, most powder adheres to the shadows and least to the high lights. The powder is kept in motion till the image is fully charged, which should be in about one minute. If the film has become too tacky by development being delayed, the picture will be smudgy. When the image has been fully developed the superfluous powder is dusted away and the film coated with plain collodion. When this is well set, the tablet is placed in water to allow the gum and bichromate to dissolve out. The film is then dried, and, assuming that the powder employed is of a vitrifiable nature, the tablet is placed in a muffle and heat applied until the fusing point is reached. A porcelain glaze is afterward applied.—*Technical World.*

## A WORD UPON POSING

BY CHARLES STILLMAN TAYLOR

THERE are many photographers of skill who stoutly affirm that the art of posing cannot very well be taught; that this very desirable facility is not to be acquired, either with the aid of personal instruction or through the medium of printed text. That this viewpoint is altogether wrong, a little knowledge of the subject will quickly prove and as quickly banish the glamour of mystery which many amateurs associate with the skilful posing of the human figure. Despite the opinions of many able camera workers, who declare that posing is a matter of inborn good taste, or a gift, I shall endeavor to point out, that the pose is really nothing more than a method of expression, quite the same as writing or speaking, and that, by observing certain fundamental forms, it is quite as possible to cultivate a knowledge of how to pose, as it is to become proficient with the pen, or to acquire a pleasant and expressive manner of speaking. At the beginning it may be well to remark that the object of a portrait is to first portray the likeness of the model, then to bring into being the characteristics of that individual, and lastly, to so

arrange the figure within the picture plane, that the effect may be pleasing to the eye. This arrangement of the figure to fit a space is the mission of the pose, while the arrangement of the lines and masses of a figure, together with the distribution of light and shade, is known as composition. Thus you see a portrait should possess three elements: likeness to the original model, an agreeable arrangement of the figure within the picture space, and a harmonious distribution of light and shadow, which will bring out or emphasize the character, beauty or grace of the model.

In nature as in art, we find that the different forms of objects have a deep significance to us and that different forms bring different sensations to our minds. Nearly everyone can appreciate the greater beauty of an oval when compared to a square, and see that a curved line is far more beautiful than a straight one. And this is so, because the curved line appeals more strongly to our imagination and by reason of its greater variety, the circular line creates in our mind a greater number of suggestions or ideas. As a curved line gives us the greater pleasure, so does a vertical line give us the idea of support or stability; a horizontal line the idea of repose; while lines drawn at an angle from the perpendicular, suggest life and action. This brings us to the expression of beauty in lines, and in his "Analysis of Beauty," a rare work published in the year 1752, the artist Hogarth speaks thus of a flowing line: "The serpentine line, by its waving and winding in different ways at the same time, leads the eye in a pleasing manner along the continuity of its variety, which line with the triangle, gives the most expressive of figures, signifying not only beauty and grace, but the whole order of form." This line is often called by painters, the "line of beauty." Raphael was an exponent of this serpentine line and in the reproduction of his Parnassus the grace and elegance of this line of beauty can be observed.

Much of the failure that comes to discourage the photographer who takes up portraiture in a serious way, is due to the ability which the camera has, of clearly delineating both the undesirable as well as the desirable feature of a view. This is one of the greatest obstacles the amateur portrait photographer has to overcome, and too much care cannot be taken to preserve the simplicity of a portrait; that the eye may not be attracted by an overabundance of unimportant detail, but that the interest may at once be drawn to the personality of the model itself. While in the majority of portraits, the centre of expression is usually in the head or face, the other members of the body play a very important part also. The attitude of the body should be given due attention and not ignored as a means to express character and individuality. In every picture there can be but one object upon which our interest is centered and to this objective points all lines should lead, that the eye may not stray along a confused tangle of conflicting lines, but be rather led, without an effort, to the point of greatest interest. It is not at all necessary, as many seem so inclined to believe, to throw all but the principle object of interest out of focus, but it is important to so subordinate the lesser details or accessories of the portrait, that they many not draw attention away from, and so conflict with the principal point of interest. A reasonable amount of detail is a necessary part of a portrait, for without some support the composition would be lacking in variety, and thus simplicity if carried to excess, will produce monotony and dulness, and so defeat our ends.

Variety may be well considered as being one of the principal sources of beauty and, unless carried too far, it is a very important factor in photography, because by the introduction of several forms, lines, or shadows, we give relief to the eye and so furnish entertainment for the mind.

Repetition is likewise an important aid, and by thus introducing repetition to oppose variety, we echo, as it were, the major chord. Yet in our desire for variety we must ever bear in mind, that a pleasant and well balanced composition cannot be had unless there is harmony between the several parts of a photograph, or in other words, we must have variety with unity. Alison in his essay on "Taste" speaks thus pertinently of harmony. "Beautiful forms must necessarily be composed both of uniformity and variety, and this union will be perfect when the proportion of variety does not encroach upon the beauty of unity."

This may be also said of uniformity and symmetry, which if carried to extremes, results in monotony and weariness. In our oval we find a good example of variety in unity, while the outline of a square expresses the opposite sensation, unity without variety.

Stability or support is yet another important element of the pose, expressing the idea of strength and rest. One of the most graceful as well as the most simple expression of support is found in the forms of a triangle, where each line is found to support or balance that of another. This pyramidical form of design we find in many famous paintings and in portraiture. The pyramid or triangle form in its many variations and modification is of the greatest assistance to the photographer. If we have lines running in but one direction, the effect is noticeably weak and one-sided, and to remedy this awkwardness, other lines running in an opposite direction are introduced for the sake of balancing.

As the photographer's chief aim is to decorate a space, the worker should keep in mind those essential underlying principles which have just been mentioned. In the composition of the figure, two methods are at the photographer's command. One method is known as the "decorative line," a form of arrangement which is very popular with many modern painters. This method wherein the line of decoration is both the beginning and the end of the composition, is seen in all its beauty in the works of the Japanese painters, and as a medium for the expression of the worker's individuality, the decorative design, has, perhaps, more scope for freedom of execution, through the more conventional forms of composition.

The other method of arrangement is the better known conventional composition and numberless examples may be seen in the many works of master painters of both the old and the modern schools of painting. In this method the figures are designed to conform with certain fixed principles and while many artists and art critics believe this order of design lacks the freedom of the decorative composition, this conventional design has long been regarded as the foundation of art. This order of form in figure composition is based upon the circular and the triangle line and their numerous variations and from the significance which these lines bear in the arrangement of objects, various art writers have divided these designs into circular and pyramidical compositions.

Circular composition is of value where several figures are grouped within the picture space and by its simplicity and pleasant sweep, a great deal of character is given to the composition. The circle with its variations, such as a circle within a rectangle, oval,

ellipse, and so on, are not so widely used in photographic compositions as other forms. In outdoor portraiture the circular line is of great assistance in combining the landscape with that of the figure, thereby producing a union and balance of masses and shadows, upon which the pictorial effect of the group so largely depends.

The triangle or pyramid is especially adapted to the pose of a single figure and for this reason has been much used by the photographer. The pyramid is capable of many variations and may be lengthened or shortened at its base or sides, inverted and changed in many ways.

The vertical figure in composition can be oftentimes made to express a great deal, but in amateur photography the successful handling of the vertical is not so often seen as other positions of the figure. The vertical line is unquestionably a very attractive line in the portrayal of art, and the greatest drawback to its successful representation is found in the spaces unoccupied by the figure. By a vertical is usually meant, a standing one, where the model occupies considerably more picture space than if the same figure was sitting or reclining. The greatest objection to this vertical line, is that the two oblong spaces upon either side of the subject, show an emptiness or blackness, not at all in unity with the figure. In the full length portraits of women this point is not so strongly marked, as the angular line of the skirt breaks into the regularity of this side space. But in the portraiture of men, the full length figure presents a much more difficult problem, as masculine apparel is not so well adapted for this purpose. To preserve the unity of the vertical figure, the empty side spaces must be broken of their regularity and if this is accomplished by letting the figure encroach upon these side spaces, the unity of the composition is complete.

But whatever form of composition is selected to express our idea of a pictorial photograph, the worker should by no means attempt to closely follow any contour of design, but by keeping fresh in memory those principles already given, should aim to so treat each figure in his composition, that beauty, grace, and character may be represented in the pose. The means employed should not be made too evident, but neither should too much care be devoted to its concealment, which unless very ably done, shows the trouble we have taken to "conceal the art for art's sake." While a multiplicity of directions might be given for posing the body, the head, the hands, and so on, yet it is evident that any set of rules can be of but little if any real benefit, for unless the worker understands the underlying principles of the subject, he can only follow blindly such methods of procedure, imitating the effect without knowing the cause. With this point of view in mind, I shall merely mention the important considerations of the subject and simply suggest to the reader, the points which should be kept in mind when at attempt is made to pose the model.

Formality should never enter into the pose for if a formal pose is selected the greatest bug-bear of the photographer, stiffness usually creeps in to rob the work of its greatest charm. It may be said that women are easier to pose than men, and this is true, not only because the feminine costume is better suited for artistic endeavor, but is also accounted for by the grace of the subject herself. It is a woman's inheritance to look dainty and beautiful, while in a man we naturally seek for character, strength, and ruggedness. A nervous consciousness should be avoided at all times and for this reason

it is a most excellent idea to interest the model in some of the many little things so natural to the subject, and which every-day association so constantly recall to mind. The simple act of buttoning a glove, holding a fan, picking up the skirt, or arranging a vase of flowers, will add a motif and interest to a portrait, often unobtainable in any other way. The sudden suspension of motion which is so admirably seen in statues, is yet another means of obtaining animation in the model. An example of the effectiveness of arrested motion, is seen in the well known picture "A Daughter of Niobe," and which may be represented, photographic wise, by the model picking up a book while passing a table; pausing an instant as she greets an acquaintance; or perhaps it is nothing more than arranging a lock of straying hair. Reading, sewing, and writing also lend aid in relaxing the body, that it may assume a graceful, easy, and natural pose.

The arrangement of the hands in a portrait is often one of considerable difficulty and various methods are made use of to lessen conspicuousness of the hands. The principal reason for failure is due to the feminine subject who invariably complains that the hands appear unnaturally large. This dissatisfaction arises not because the hands are usually out of proportion with the head or other parts of the body, but is principally due to the artist who previously to the introduction of photography, erred in drawing the hands and feet much smaller than the natural size. This error is a traditional one and while the camera has corrected much of the former exaggeration of the pencil and brush, the hands are still the cause of much dissatisfaction. Unlike the painter, the photographer must, for the sake of focus, keep the hands in the same plane as the head, and upon this account the camera worker is greatly cramped in working out his pictorial ideas. If one give an occupation for the hands, their natural disposal is assured, providing they are occupied in a manner which harmonizes with the subject, or motif of the photograph. The two hands should never be occupied separately, doing two things, because attention is drawn and confusion is created. When the hands are brought together care should be taken to avoid having their position form any noticeable figure or angle, which will conflict with the pose of the head or body. In some positions, the hands appear much larger than in others, and this is especially so when the broad back of the hand is seen, or when the hands are brought close together with the fingers interlocked, which under a broad lighting appear like one hand. The light should never fall too strongly upon the hands and seldom with the same intensity that illuminates the face or figure.

Expression in portraiture does not consist in forcing the features to assume an unnatural, intense expression. Many faces are very beautiful in repose, a few appear almost idiotic when a smile is attempted, and a very few indeed can be portrayed when laughing heartily. A smile, if natural, is beautiful, but a made-to-order simper is far from attractive. Animation, is, upon the other hand, suitable for all subjects and fully deserves the closest attention of the camera worker. The attitude of the figure should be in perfect harmony with the face and the expression should be characteristic of the individual, while the scheme of light and shade should bind all together, and if this is intelligently done, the photograph should portray the desirable and agreeable characteristics of the sitter, which is all that portrait photography can be expected to accomplish.

By Ruegge, Milwaukee

By Ruegge, Milwaukee

By Ruegge, Milwaukee

By Ruegge, Milwaukee

By Ruegge, Milwaukee

1. Mlle. Sophie Arnould
2. Girl with Doves
3. Head of Girl
4. Portrait of a Lady

*Illustrating Sidney Allan's Article*

5. Mme. de Porcin

6. Girl with Scarf

7. Mme. de Boisset

8. Girl with Basket

*Illustrating Sidney Allan's Article*

9. Head of Girl

10. Roguery

11. The Winder

12. Girl with Clasped Hands

*Illustrating Sidney Allan's Article*

# MASTERS IN PORTRAITURE—JEAN BAPTISTE GREUZE

BY SIDNEY ALLAN

JEAN BAPTISTE GREUZE achieved an immense reputation as a painter of scenes of domestic life. He worked about the same time as Gainsborough, *i.e.*, during the years 1745 to 1775, and, strange to say, had many of the same characteristics of his great English contemporary. It almost seems as if taste was never local, but always spread over all civilized lands that were in close, even if in slow, interchange.

Gainsborough, true enough, was infinitely superior in dignity of composition; but Greuze had the same suavity of line, the same fondness for flowing curves, picturesque garments, and lavish accessories. He lived much longer than the Englishman, he even survived the French Revolution, but again he could not resist the trend of his time. He forgot the style of his manhood and tried to become in his old age an historical painter like David. He did not succeed, and died in poverty, and only the work of his earlier periods is known to the present generation. Of these, his study heads enjoy the greatest reputation. They are a trifle sentimental in tendency—he tries to play too much on our emotion—but they, after all, are exquisite compositions, no matter whether we fancy that class of pictures or not.

He always tries to say a little too much, as in Figs. 2, 8, 10, and 12. But then again we owe him quite a number of charming straightforward interpretations, as Figs. 3 and 9. The most realistic painter would be proud of painting such a head of a girl as Fig. 9. It is merely the facial expression which makes it unusual, and in this peculiarity Greuze was a master. He knew that people liked pleasant, handsome faces, and so he made them—by no means such an easy task as some people think. Of course, it can be overdone, as by our fashionable illustrators. Also, he is not exempt of this criticism: Comparatively few people, educated up to modern art ideas, could live with pictures like Figs. 2, 6, 8. and 10. But how about the portraits of Sophie Arnould (Fig. 1), and the portrait of a Lady (Fig. 4)? They surely are satisfactory even from the modern viewpoint.

Fig. 1 is an excellent composition. It is pleasing in line, full of contrast, and picturesque throughout. The only fault I have to find with it is that it does not show enough of the figure. It looks cramped, but this is explained by the crouching attitude. If the lady were not leaning forward one of the principal charms of the picture would be absent. The facial expression alone —exquisite as it is— would not save it. It is the way the lady sits, how she holds her head and hand, which make the picture what it is. Besides, the dark shawl and hat with the white feather furnish notes of color and contrast that lend a picturesque appearance to the entire composition. We can easily believe that this lady was the famous actress Sophie Arnould, who played such an important part, not only on the French stage, but also in history.

The least said about Fig. 2 the better, although the drapery to the right is well managed. Fig. 3 is a convincing character delineation of a child, and

this is a rare accomplishment indeed. She looks natural despite her pose as a flower-girl. This is largely due to the facial expression, and the simple way in which she holds the bunch of flowers.

Greuze knew the value of attitude. He could do whatever he wished with the human form. If his taste had been less time pleasing he would have left innumerable masterpieces. As it is, he left but a few. Two of these are Figs. 1 and 4.

The Portrait of a Lady, Fig. 4, is exceedingly simple. The long neck, the arrangement of the hair, and the lines of the shoulders are the principal features of the composition. The face is well drawn and modelled. Few portraitists today will succeed to make such a fine portrait with such simple means. The character of the accessories has changed. That is all. Greuze needed pigeons, bird cages, baskets filled with fruit, to convey his pictorial ideas; the modern portraitist, chairs, picture frames, and cushions. We prefer attitudes that say nothing in particular, while the French took special pleasure in expressing reverie, melancholy, ecstasy, etc.

Madame de Porcin, Fig. 5, excepting the wreath around the dog's head, is worthy of a Sargent. As an oval composition, it furnishes evermore a valuable object-lesson. The whole bust, shoulders, and arms repeat the oval shape. The head does likewise, and so we arrive at the formula, two oval shapes of different sizes surrounded by a third larger oval always produce an agreeable division of space and a pleasant sensation to the eye. The dark shape of the dog and the lady's coiffure balance each other perfectly. We also notice that this painter was fond of using the shadow of figures in his background. We see it in Figs. 1 and 6, besides Fig. 5.

Fig. 6 depicts a pretty face and shows the good use of a scarf. Nevertheless, the drapery effect is a trifle elaborate. The portrait of Mme. de Boisset, Fig. 7, on the other hand, is strangely severe for this painter of elegance and grace. It exemplifies the application of symmetrical forms in an oval. It looks too much like the ordinary miniature. I think this style of composition would be better avoided. The texture of the lace collar and satin waist is beautiful, but does not condone for the lack of picturesqueness.

There is little worthy of recommendation in the Girl with Basket, Fig. 8, and Roguery, Fig. 10. A facial expression which delineates a distinct phase of emotion or fancy of the mind, like "roguery," no matter how slight or fleeting, lies outside the domain of portraiture. Of course, this is meant for a study head, but even in study heads vaguer expressions are more preferable. Fig. 12 is more to the point. This girl with clasped hands would even please a Herzog. It is merely a picturesque attitude with a luminous facial expression, just the theme for decorative experiments.

The Winder, Fig. 9, is an example of Greuze's figure pieces, by which he is best known. They show considerable skill, but the time of elaborate detail and pictorial storytelling has passed, and I believe most of us (except in Milwaukee and Cleveland) prefer a simpler face. I am of the opinion that the interest in Greuze's genre pictures and sentimental fancy heads will steadily diminish, while the beauty of his simple portraits and portrait studies, like those of Sophie Arnould and Figs. 4 and 9, will become more palpable from day to day.

They can teach the modern portrait painter the importance of a pleasant facial expression and an elegant, as well as characteristic, attitude.

# PORTRAITURE

BY HAROLD BAKER

THE photographer who may be expert at landscape or architectural work, will find himself at a loss when he essays portraiture. For apart from the art of managing the sitter (a most important element in producing a successful result), he will soon find that the kind of plate that is suitable for outdoor work does not answer well for portraits, unless the developer is greatly modified, for quite a different kind of negative is required. As a general rule it is advisable to use very rapid plates for portrait work; and in this respect at the present day we are much better supplied than even five or six years ago, and with an extra-rapid plate it is possible to secure a fully exposed negative in half a second, in weather and under lighting that was quite impossible ten years ago. The best expression and pose are generally secured when the sitter is unaware of the actual moment of exposure; and for this purpose a silent shutter working inside the camera is best. The sitter should never be *asked* to keep still, unless in groups and when circumstances necessitate a long exposure; and nowadays an exposure of five or six seconds is a long one. Every effort should be made to put the sitter quite at ease.

A head-rest should not be used unless absolutely necessary, and few photographers are aware how easily it can be dispensed with, and fail to realize how strong an objection nearly every sitter has to it. It is far better to have an occasional plate spoiled by working without the rest than to make every sitter uncomfortable by its use. In fact some portrait negatives are actually improved by a slight movement. In a special kind of lighting when the face is in *shadow* relieved against a light background, a slight movement which produces the effect of diffusion of focus greatly improves the result.

Great care must be exercised in choosing the background even when it is only plain or graduated, and it is well worth exposing three or four plates on the same sitter, in the same position and lighting, and with the same exposure, but with different backgrounds, and then carefully comparing the resulting prints. Even if only one background is at hand its depth can be varied by placing it nearer or farther from the source of light. The background must also be selected to suit the lighting of the sitter, as a background of medium tint suitable for what is called "ordinary lighting" would be quite unsuitable for "Rembrandt" effects, or where strong contrasts of light and shade are used, when part of the face is in dark shadow. For such effects a dark background is usually best, as it gives luminosity to the shadow side of the face. But such dark backgrounds are not suitable for "ordinary lighting" where the face should be full of delicate half-tone, all of which would be killed by the strength of the dark background.

For the Rembrandt effects a much longer exposure is necessary as less light is reflected from the face on to the sensitive plate; they will often need twice or three times as much as for ordinary portraits.

When pictorial backgrounds or accessories are used it must be remembered that the object of the photograph is to secure a portrait of the *sitter*,

not to show what a large stock of accessories the photographer possesses. It is best to use as few accessories as possible; I have heard a lady complain bitterly of a well-known photographer, who, having posed her in a very difficult position, kept her waiting for five minutes while he arranged a screen, a palm, a footstool, a tiger-skin, etc., so that she felt positively ill before the exposure was made. The sitter should not be kept waiting in the pose to be photographed any longer than is absolutely necessary. If accessories must be used they should be simple and suitable.

When portraits have to be taken in ordinary rooms it is advisable to get a friend or assistant to experiment upon, if possible beforehand. Even a few minutes spent in studying the possibilities of light and arrangement of furniture will save a great deal of worry when making the actual exposures, and nothing upsets nervous sitters more than having all kinds of experiments and arrangements made with them. But it is sometimes well worth wasting a few plates on exposures which the photographer thinks will be useless, in order to give the sitter time to get accustomed to the room; it must not be done in a fussy, irritating way, but rather to show that it is not such a very dreadful operation and really "doesn't hurt." This plan often works well with nervous children, who soon become accustomed to the room and the photographer. There is a great deal to be said in favor of the maxim "leave your sitters alone." The photographer must cultivate quick observation so that he sees at once a good pose, and secures it; and here again quick plates are essential, as many of the most charming poses are caught unexpectedly. It has been well said that the best poses the photographer secures are those he *observes*, not those he *creates*. But a spontaneous pose may not be quite perfect, and a slight alteration may be easily made without disturbing the rest of the figure. It will generally be found that a pose that takes a great deal of arranging is not a success.

When taking portraits in an ordinary room it is usual to place the sitter near the window, so that one side of the face is strongly lighted and the other in deep shadow, and then use a white reflector to light up the shadow side. It is often better, when the window is a large one, to place the sitter farther back in the room, almost facing the window, and put the camera near the middle of the window looking into the room; a softer lighting will then be secured. For outdoor portraits a shady corner is best, and, if possible, one where the side light is much subdued on one side; a light head-shade may be used with advantage. A large gray rug out of focus makes a good background; a blanket is too light.

A portrait lens is best for the work; but if the photographer does not possess one, he need not despair of producing good work. A rapid rectilinear lens used at a large aperture will answer the purpose well; it should always be used at full aperture, partly for the sake of quickness in exposure, and partly to prevent accessories and parts of the dress appearing too sharp, and competing in importance with the face. Subordination of parts is one of the essentials of a picture; and if we examine a *good* portrait we shall find that probably no part of the photograph is quite sharp, except the eyes and face. Otherwise the less important details are apt to obtrude themselves on our notice. A stop will generally be necessary, however, with a portrait lens if a full or three-quarter length is to be taken, and it will be found that heads only (as a rule) can be taken at

full aperture. Just as good work, however, can be done with a rapid rectilinear as with a lens specially made for portraits, except where rapid exposures are to be made; but it is necessary to use one of fairly long focus. A rapid rectilinear lens used for landscape work on a half plate, would be much too short in focus for giving good portraits on the same sized plate, for in order to get the figure large enough it is necessary to place the camera so near the sitter as to produce distortion. For portraits on a half plate, a lens of at least 9 inches focus should be used, and for a whole plate not less than 16 or 18 inches, and longer if possible.

The swing back of the camera will be found useful in portrait work for getting parts of the figures into focus that are either too far behind or too far in front of the plane of the face. For instance, a full-length figure leaning back in a chair will have the feet out of focus when the face is sharp, if the back of the camera is vertical, and this applies with even greater force to groups. A side swing, too, is useful, but is not absolutely necessary. Even in bust portraits, the swing back is useful in getting the shoulders in focus when using a large aperture, for although it is well not to have the whole of the figure in *perfect* focus all over, it is not advisable to have the face sharp and the rest so out of focus as to be blurred.

The development of a portrait plate should be different from that of a landscape, because a different kind of negative is required. A rapid plate developed so as to give a soft, delicate image is best; and a developer containing more alkali and less density is good, and it may be considerably diluted with advantage. The image should appear within ten seconds of pouring on the developer, and the negative will generally be developed to sufficient density in from two to three minutes. With a good average rapid plate, the image should show fairly well on the back of the plate, but this, and the time of development will vary so much with different developers, and with the taste of each photographer, that no hard and fast rule can be laid down.

Developers that give a brown deposit or that stain the film, will require shorter development than those of the newer developing agents that give a cold, black color to the negative; another fact to be borne in mind is that the image formed by these latter appears to lose more density in fixing than when pyrogallic acid is used.

A perfect portrait negative should have no clear glass shadows, and no part should be so dense as to give white in the finished print, and some negatives which give the best results may have a decided veiled appearance in the shadows.

The temperature of the developer is another important point; in very cold weather the developer should be kept warm, or if in concentrated solutions may be diluted with warm water. In cases of known under-exposure, the developer may be used quite hot with advantage. A convincing experiment can be made by cutting an exposed plate in two, and developing one half with icy cold developer, and the other half with warm. The difference is really remarkable. If the developer has been used hot enough to make the gelatine of the plate feel "slimy" an alum bath is necessary, unless the fixing bath contains chrome alum.

The question of retouching is a difficult one. There is no doubt that a certain amount of it is necessary on nearly all portrait negatives, and even on those of children. But it is equally certain that the great majority of portrait negatives are over-retouched, so

much so that their value both as portraits and pictures is nearly destroyed. Yet a certain amount is necessary, even for pictorial effect, and perhaps still more when the question of likeness is considered. For, as a rule, the untouched negative is no more a true likeness than the over-retouched one. The truth lies somewhere between the two. Even if isochromatic plates are used, the little differences of color in the face and the incipient wrinkles are exaggerated in an unpleasant way. Under-exposed negatives will show these defects in a very marked manner, full exposure will greatly reduce them. Large, heavy patches of shadow may be lightened by coating the back of the negative with matt varnish, and when it is quite hard "hatching" upon it with a soft lead. Harsh lights may be reduced by scraping away the matt varnish with the point of a knife. In some cases, the matt varnish may be stained with a little aurine or uranine. Exaggerated lines and small shadows must be worked upon from the front, and a retouching desk is necessary. The film of the negative will not take the pencil without some preparation. The best surface is obtained by spreading a little retouching medium with the tip of the finger on the part to be touched. A thin film of soft resin is left upon the plate, which takes pencil marks readily. A hard lead, No. 4 Faber or Hardtmuth, should be used. The loose leads used in what are called the "ever-pointed holders" are most convenient. The point must be very long and fine, like a large darning needle, and is best made by rubbing the lead on a piece of fine glass paper. The pencil must be held very lightly, and the lines touched away with short, *light* strokes; a heavy stroke only rubs the medium up.

The little shadow at the end of the mouth often has to be reduced, often at the risk of spoiling the shape of the lips, but sitters *will* insist upon it being done, and say, "You have made my mouth much too large." Freckled faces are perhaps the most difficult to retouch, as it is well nigh impossible to remove the black patches caused by the freckles without at the same time destroying the modelling of the face. Yet it must be done, for probably the most severe stickler for truth would not insist on the black blotches that freckles produce in a photograph.

A great deal can be done to improve a hard negative as soon as it leaves the fixing bath, by applying a mixture of hypo solution and a solution of ferricyanide (not ferro) of potash with a piece of absorbent cotton to the dense parts. The proportions for this reducing bath are as follows: To each ounce of the ordinary hyposulphite of soda fixing bath add a few drops of a 10 per cent. solution of ferricyanide of potassium or red prussiate of potash, making the whole about the color of pale brandy. By adding more of the ferricyanide solution the reducing action is quicker, but there is a greater liability to stain the film. The work should be done over a sink with a faucet of running water at hand. The solution should be of a deep lemon color (it is almost impossible to give exact quantities), and after a short application must be washed off under the tap, and the negative may then be examined, and the reducer applied again and again till the desired reduction is obtained. It is advisable to make a few trials on spoilt plates. For if any really good work is to be done, there will be plenty of rejected negatives. Probably, of all the plates exposed on portraits by first-rate professional photographers, not more than one-fourth ever get as far as the printing frame.

Moral: Do not be chary of exposing plates, they are cheap enough now. Don't feel, "Oh, this will be good enough. I won't do another." On the other hand, don't expose carelessly and recklessly and say, "It will all come right in developing." Good work is not done that way. Use every opportunity of seeing good work. Study the work of great portrait painters, but don't neglect the photographers. Go to all the exhibitions of pictures and photographs within reach.

Don't be satisfied with what you have done, but make a resolve to do something better next time. Remember, what is worth doing at all is worth doing well.

## PREPARATION OF PAINTED CANVAS FOR CARBON PRINTING

ORDINARY painted canvas, such as is used by artists, or strong linen may be used with special treatment.

The canvas is first stretched tightly on a drawing board, same size as picture required, the greater part of paint removed by scrubbing with soda solution (either nail brush, sponge, or a piece of flannel will answer the purpose) until the surface of the fabric is exposed and little of the paint remains beyond the priming. After drying, the canvas is coated with the following solution, applied with a flat camel-hair brush. Several coats (three in cold, four in warm weather) are given, drying between each and rubbing with fine sand paper if at all uneven.

COATING SOLUTION

| | |
|---|---|
| Cooking gelatine (Cox's soup answers perfectly) . . . | 4 ounces |
| Sugar . . . . . | 2 ounces |
| Glycerine . . . . . | 2 ounces |
| Water . . . . . | 30 ounces |
| 30 grain chrome alum solution | 1 ounce |

The print is exposed in the ordinary manner, developed on temporary support, allowed to dry and transferred to the canvas as follows: The canvas is placed face upward, on a level surface by preference, on a broad board over a large tank. The dry print is placed face upward in a flat dish, the warm coating solution poured over it, air bells removed with the brush, the surface of the canvas brushed over with the solution. The bulk of the solution is then poured on the canvas and before it has had time to run off the print is lowered carefully and quickly upon it and squeegeed to remove excess of solution. After thorough drying, the temporary support is removed, the surface of the print cleaned with benzol or ether or a mixture of both to remove every trace of the waxing compound, and mounted on a stretcher in the usual manner. A print on canvas prepared as above, is perfectly reliable, it will neither crack nor peel, and can be used with perfect confidence as a basis for the most costly form of artistic finishing, as the carbon image rests upon an elastic substratum in actual contact with the fibrous substance of the canvas.

### *To Prepare Ordinary Strong Linen or Calico*

Proceed precisely as for painted canvas (of course without scrubbing), using the same coating solution with half a pound white pigment added, sulphate of baryta answers perfectly. Sand or glass paper must be used pretty

freely as the surface of the unpainted fabric washes up roughly when the gelatine coatings are applied.

*Wood Panels*

Wood panels are prepared by removing the surface of the paint only with soda solution. After drying, a tooth is given by rubbing with fine sand paper and coating with solution as under:

| | |
|---|---|
| Gelatine (Cox's soup) . . | 3 ounces |
| Sugar . . . . . | 1 ounce |
| Glycerine . . . . . | ½ ounce |
| Water . . . . . | 30 ounces |
| 30 grain chrome alum solution | ¾ ounce |

*Note.*—Before transferring to either kinds of canvas or wood panel in cold weather, it is absolutely necessary to thoroughly warm the final support, otherwise the gelatine solution will gelatinize before the excess can be removed from between the surfaces.

## SOME HINTS ON THE PHOTOGRAPHY OF LIGHTNING

At the present time of year, when thunderstorms are of frequent occurrence, the following practical notes on the photography of lightning will be useful to many readers who desire to attempt this interesting phase of work.

The photography of lightning is a simple matter if circumstances are convenient; on the other hand, it may be dangerous, uncomfortable, or impossible if circumstances are unsuitable.

In the first place, lightning can only be photographed at night, because the duration of a fork of lightning is so short that the shutter could not be opened quickly enough to catch its image, so the camera has to be set up and the lens to remain uncovered till the flash has occurred, and then closed. This could, of course, not be done by daylight.

One naturally requires a window with a fair expanse of view. The photographs could as well be taken through the window, provided it has clean, clear glass, when it does not rain; but usually such thunderstorms are accompanied by heavy rain, and then the drops and streams on the glass would blur the image on the plate.

There is usually a considerable amount of sheet lightning between the fork lightning; a photograph of this would, however, not give an interesting picture; it would only appear like a photograph of the same scene taken by daylight with very much too short an exposure, and a sky lightened in places. This sheet lightning affects the plate to a certain extent each time it occurs, but no harm will be done by three or four even fairly brilliant flashes, and when sheet lightning is fairly moderate it can be almost disregarded.

In order, however, to restrain its power on the plate as far as possible, it is wise to use a fairly small stop, say F/11 or F/16. This has the double advantage that it also sharpens the image of the fork lightning, when it occurs, and fork lightning is so intensely vivid that a small stop is quite sufficient.

The camera should be so placed as to include a portion of the horizon, whether landscape, or the masses of houses of a town, or anything else: the impression of terror usually conveyed by lightning is thus imparted to the photograph, especially when the lightning really strikes the ground, and the actual spot can be afterward traced in the photograph.

Unfortunately the lens can only be pointed at random toward the place where one considers most flashes will occur; but by watching the direction of the storm one can usually get the image sufficiently well centred on the plate that by a little trimming of the print it gives a satisfactory appearance. Rapid plates, well backed, should be used, and an average stop of F/11 will be found most suitable, but when the flashes are very close and vivid the lens may sometimes be stopped down to F/22. Several flashes may, of course, be taken on one plate by leaving the lens open for successive exposures; but for record purposes "one plate one flash" should be the rule. A wide-angle lens, by including a bigger angle of view, will frequently produce more striking results, showing apparently a bigger or longer flash.

The negatives will probably disappoint when first developed, owing to so much clear glass, or parts that have apparently received little or no exposure. But the print is the thing, and this will usually be found more satisfactory than would be thought possible at first.—M. HARE in the *Amateur Photographer*.

## POINTS ABOUT FOCAL-PLANE SHUTTERS

THERE are doubtless many photographers who, at this time of year, decide on a change of apparatus, and many of these will feel a desire toward the acquisition of a focal-plane outfit, either of the double-shutter type, with a detachable focal-plane shutter for special occasions and a front diaphragm one for ordinary use, or of the Goerz-Anschutz pattern, with a single extension and the shutter built into the camera body, or a reflex, in which the focal-plane shutter is usually fitted as a matter of course.

The following notes, derived from personal experience, may be of use in enabling such to decide, first, whether the focal-plane type is worth its bulk and cost, and secondly, which of the numerous patterns is likely to prove most satisfactory.

### *Work to be Done.*

Whether it is worth while to invest in one depends entirely on the class of subject the photographer wishes to tackle. For all ordinary hand camera work the diaphragm pattern is quite as convenient, and more so, for it provides a much more useful set of slow speeds, and its braking system enables slow exposures to be given with a single finger pressure. Many focal-plane shutters will give nothing slower than one-fifteenth or one-twentieth of a second, and at these speeds there is great risk, owing to the weight of the moving parts, of a blurred result due to movement.

The extra light-passing efficiency of the focal-plane shutter is of little importance at slow speeds, and some workers assert that at nothing slower than one-hundredth second does this efficiency count. My own idea is that even at one-thirtieth the diaphragm shutter is inferior, the time expended in its opening and closing accounting for a large proportion of the actual exposure. This is shown fairly conclusively by the light diagrams obtained by Mr. E. A. Salt on his shutter-testing machine, and shown to the Royal Photographic Society. Only one diaphragm shutter gave clean-cut

square records, comparable to those obtained with the focal-plane types.

For photographing such subjects as moving motor cars, cycle racing, foot racing, and other athletic events, the focal plane is, of course, indispensable, and if any press work is to be attempted it will, in nearly every case, be focal-plane work. Apart from the question of efficiency, it is the only kind of shutter, with one or two possible exceptions, which gives actual exposures of one-hundredth of a second and less.

### *Accuracy.*

Many photographers who accept the statements of the expert as to the inaccuracy of the diaphragm shutter still believe in the accuracy of the focal-plane. This faith is not justified, for both are equally inaccurate in the majority of cases. These inaccuracies do not condemn the shutter, for the practical utility of the actual speeds is soon ascertained in use and the markings habitually ignored.

The so-called one-thousandth of a second is about as illusory as the one-hundredth usually accredited to the diaphragm shutter; it actually matters no whit what the top speed of the focal-plane shutter may be—it is quite as fast as the plate will stand, even under the most advantageous lighting circumstances. Whether it is labelled 1-1000, 1-2000, or 1-800, it will probably be somewhere in the neighborhood of 1-400th.

### *Tension Spring or no Tension Spring.*

Some focal-plane shutters are described as having no "tension spring" —this statement only means that the tension cannot be altered by the user. In practice, the variable tension is of great utility, and I, for one, would sooner have it than not. If the speeds range down to something usefully slow, the chances are that the spring will only just carry the shutter down on its largest aperture; and a spell of cold weather may slacken off the action so that the slowest speed cannot be used, for the shutter will stop before the end of its travel. On instantaneous speeds, this perhaps does not matter, for the next higher may work quite well; it is in the giving of time exposures that the trouble is serious.

If the shutter is fitted with a time exposure movement, opening half way to the first pressure, and dropping the rest of the way on the second, there will be insufficient tension to close it properly, and the plate will be spoiled. If the full opening could be employed, and the spring tension at the same time increased, there could be no trouble on this score.

### *Distortion.*

Another advantage of the ability to obtain the same exposure with different combinations of aperture and tension is the power which is put into the photographer's hands of using a large opening and a high speed to avoid distortion.

The effect by which a picture, say, for example, of a racing motor taken broadside on, shows the top of the bonnet a foot in front of the bottom is well known. This is due to the movement of the image across the plate during the brief space of the shutter travel. In other words, the wheels of the car are first impressed on the plate; the slit passes downward, and exposes successively the lower part, the hubs, the upper part of the wheels, the car body, and lastly the driver's head, which may by that time be a foot in advance of the position it occupied at the commencement of the exposure. If the photographer, instead of a small

slit, could use one the full width of the plate, and increase the tension of the spring so as to drive it at a very high speed, this distortion might not occur; certainly it would be much less noticeable.

*Efficiency.*

To secure the maximum efficiency of the shutter it should work as close to the plate as possible. The distance between plate and shutter is usually too great unless one is content with a non-reversing back. In cameras fitted with a revolving back the exigencies of design oblige the maker to allow a good deal of space at this point. In cameras of the Anschütz pattern the waste is at a minimum. The loss of efficiency due to this constructive limitation—for one can hardly call it a fault—is partly discounted by the use of large apertures in the blind, combined with the use of the driving spring at a high tension.

At a narrow aperture the vignetting of the blind shadow on the plate may cut off a considerable proportion of the actual width of the band of illumination. The present universal practice of fitting reflex cameras with a revolving back means, of course, that the shutter must be some way in front of the plate.

*Definition.*

It has been said that the diaphragm shutter, opening from and closing to the centre, actually facilitates the securing of good definition and depth of focus by acting to some extent as an iris diaphragm at the beginning and end of its movement. Whatever theoretical truth there is in this statement, I cannot say I have found any practical difference when using the same lens with a front shutter and with a focal-plane on the same camera.—S. J. TAYLER, *in Photography and Focus.*

## EXPRESSION IN PORTRAITURE

WHEN inspecting professional portraits we are constantly hearing this or that picture described as a speaking likeness, while, as a matter of fact, very few are anything like speaking, or even suggest *life* at all, and it is because of this that the writer has been tempted to give his theories as to why they do *not* live and speak, and to suggest a way he has carried successfully into practice himself to remedy these shortcomings.

It is well known to photographers that sitters get that "stock" expression because they *know* they are being "taken." Why? They don't look so wooden when one speaks to them; in fact, directly the photographer addresses some remark to them, if that remark is at all interesting, their faces immediately lighten up, and a living, vivacious expression is the consequence.

I can imagine several readers remarking, "Then that is the time to make the exposure." True! But remember it is not always possible to take snapshots, and, too, the sitter will be looking at the speaker, not at the lens, and the resultant photograph will have what is known as an averted gaze—the sitter will not be looking at the beholder of the picture, and this is certainly not so nice as a photograph looking straight at you. So to obtain this we must employ some other method.

There is no doubt that when we are perfectly natural (I mean not trying to please or be interested in an artificial way) our faces express our innermost feelings. If our companion be

really witty and funny, our faces show an amused expression; if, on the other hand, our companion is uninteresting, our faces assume a bored expression; that is, of course, if we are where he can't see us. In the same way our faces reflect our feelings in regard to things beautiful and otherwise. In a picture gallery our expression shows admiration, but when looking at ordinary, uninteresting things and inanimate objects our faces naturally show a great lack of animation. So that when gazing at a camera and lens in the ordinary way we look lifeless, because there is really nothing to interest us, nothing to bring any life into our faces. We know what it is—a bit of wood and glass, that's all; our features show it; there's no animation, no expectation, just that bored "stock" expression.

Now, there is a way out of this, and that is to appeal to one's sitters' imaginations, to try and bring out any ability they may have for acting.

All people think, all have day dreams, and in their quiet, thinking moments act over again in their minds pleasant scenes that have passed, anticipate pleasant episodes they expect or hope to happen in the near future. Now it is *these* moments that one wants to call into play when a sitter is being photographed.

It is not a difficult matter. This is the way I always appeal to my sitters: In the first place, I ask them not to think of the lens and camera as photographic apparatus at all, but as a window beyond which is a small room, and in that room the people who will eventually gaze on the finished photograph.

In every case there is some *one* in particular that the sitters will want a copy for; some *one* to whom they want to appear at their best; and it is this one you want your sitters to see, *actually see* in that little room beyond the lens. Ask them to disregard you, and call all their imagination, all the ability they have in acting, into play, and see that person (it doesn't matter to you who it is), and talk to that person in their mind.

Now *turn your back* to your sitter, with the bulb-release in your hand ready. Ask him to see and talk to the imaginary one in the room behind the lens, and when he says "yes" out loud to *them* that will be the moment for you to make the exposure, while the sitter works out his own salvation.

The mere fact of turning your back to your sitter is a great help to him; it gives him confidence in himself, it leaves him more alone with his imagination, it does not allow him to feel self-conscious, and, moreover, he feels he can look as he likes because he is not afraid of appearing ridiculous in your eyes. I do believe that, on top of the fact of the man looking at an inanimate object to begin with, followed up by being moved about by the photographer, told to look here, then there, hold head up a little higher, now look a little more pleasant, then to be cognizant of a head peeping first one side of the camera then the other, any thinking man must feel absolutely ridiculous. This reflects itself in his expression; and what could be worse?

This may sound far-fetched from a professional point of view; but this article is written by an amateur chiefly for other amateurs, and as it is nearly always friends we take, we have more chance of appealing to their imaginations, so that we may get the best out of them. At any rate, it works all right with me. I find my sitters take more interest in the whole thing, and I get living expressions. Of course, I focus and get the dark slide all ready before I ask the sitter to disregard me and call his imagination into play.
—A. H. DODMAN, in the *Amateur Photographer*.

## WHAT EVERY PHOTOGRAPHER SHOULD KNOW

On Friday, May 19, about a hundred and fifty members of the Professional Photographers' Association, England, visited the Plantinotype Company's works at Penge, London, and there is no reason to doubt that these workers came away with a much greater respect for this beautiful printing process than they ever had before. They were also probably more able to appreciate why platinotype costs so very much more than other printing processes. It is not so much the fact that platinum is becoming more expensive (at the present time pure platinum costs $40.00 to $45.00 per ounce, as against $6.00 per ounce twenty-five years ago), as the difficulties and refinements of manufacture.

After the visitors had been duly impressed by the sight of thousands of pounds' worth of raw material in the form of chloroplatinite of potash and ferric oxalate enough to serve for millions of sheets of paper, other points in the preparation of platinotype paper began to dawn upon them. The exquisite chemical adjustment, the ceaseless experimenting for the production of the perfect article, and the superlative cleanliness everywhere must have appealed to the imagination of even the most blase among the company.

Mr. Willis, the inventor of the process, later at the tea provided for the visitors, told them how, when he read the result of his original researches before the Royal Photographic Society years ago, he was able then to say that he had the platinotype process before him in a test-tube. But between that stage and the possibility of making the paper in a commercial form was a vast gulf that only incessant research and patient trial were able to bridge. Platinotype paper, differing as it does from the emulsion papers in which a coating of emulsion can be readily applied to prepared surfaces, presented difficulties the mechanical surmounting of which owed much to the work of Mr. W. H. Smith, to whom Mr. Willis paid a graceful compliment for his unceasing activities. Mr. Smith, whose personality is well known at photographic societies as a genial and clever demonstrator of the process, is responsible for most of the remarkable coating and other machinery that has been produced for making platinotype paper. Necessarily, the various phases of the process are kept secret, and when Mr. Willis informed the company that with one exception they were the first "outsiders" who had been over the works the visitors expressed their appreciation in an unmistakable manner

For the purpose of perfecting the process most of the complicated coating machinery itself is made on the premises, and the greatest interest was evinced in the various workshops devoted to the making of the different parts.

The outstanding feature of the entire works, however, is the extraordinary cleanliness and hygienic arrangements introduced for the purification of air and the comfort of the workpeople. Dust and damp appear to have been completely abolished in the different rooms in which the paper is handled, and all air entering the various rooms where the paper is coated, packed, stored, etc., is thoroughly purified and dried.

No sheet of paper passes from the works that is not carefully examined and guaranteed free from flaws, and by these means the Platinotype Company's product has been kept at a high pitch of excellence and obtained a world-wide reputation.—*Amateur Photographer.*

## THE LENS IN THE STUDIO*

ROUGHLY speaking, we may divide the lenses usually employed for studio work into three classes, viz., those which will give only sharp images, those which at their large apertures give only soft images, and those which are adjustable for either sharp or soft results at will. In the first division we find the Petzval portrait lens in its original form, the Rapid Rectilinear or Euryscope, and most of the new rapid anastigmats, such as the Zeiss Tessar, Goerz Celor, Ross Homocentric, and similar lenses. Now, although these lenses are specially designed to give sharp images, it does not follow that such images must of necessity be hard. The picture I now show you was taken with a rapid rectilinear, and is remarkably harmonious and soft in appearance, although on inspection quite sharp in most of its planes. With lenses of this type it is, however, difficult to avoid hardness when dealing with strongly-lighted subjects, and many charming effects are consequently lost.

The second class, consisting of lenses which are specially constructed to give soft pictures, is a very interesting one, and deserves greater attention on the part of professional photographers than is at present given to it. Many purchase or borrow lenses of this type, and after one or two unsuccessful trials discard it, until some other worker's pictures excite them enough to make another spasmodic trial. All lenses of this type want living with for a time, and carefully and continually working until a result pleasing to the artist is obtained. Typical lenses of this description are the Bergheim, the Anachromats of Puyo and Puligny, the Eidograph, and the Smith lens. Many lenses of this class depend upon chromatic, as well as spherical aberration, and in such cases the action of the lens must be studied and careful experiments made until the exact degree of unsharpness can be obtained, time after time.

The third class of lenses, comprising some of the most useful, is well represented by the Dallmeyer Patent Portrait Lens, the Cooke Portrait Lens, and the Beck Portrait Lens. The specimens which I now pass round were taken with a Dallmeyer 4B, and illustrate the flexibility in treatment which is possible with one and the same lens. A is taken in the ordinary way, that is to say, with the back cell tightly screwed up so as to obtain the maximum degree of sharpness. Note the hard shadows and the rough skin texture. B is taken from the same position with the same lighting, but with the back cell unscrewed *five whole turns*. Here we have the maximum degree of diffusion. Between these two extremes we may stop at any point which pleases us; one and a half or two turns usually being sufficient. C is taken with the same conditions of lighting as the two preceding exposures, but from a greater distance. For this the back lens was removed entirely and the front combination used at full aperture. Here we have a very pleasing degree of diffusion produced in the same way as in the complete lens, viz., by the introduction of spherical aberration. D is also with the front lens alone, but with the aperture reduced to about *f*/11, giving the same drawing, but almost perfect sharpness. You

* The following is an abstract of a lecture delivered by Mr. Edgar Clifton before the Professional Photographers' Congress, recently held in London, and is reprinted from our contemporary, the British Journal of Photography.

will not need me to tell you that the negatives are absolutely untouched, and that the prints are purposely made to show the negatives at their worst. I must apologize for not using a more handsome model, but the sitter was the only one of whom I could be certain of not objecting to pose as a shocking example. It was my intention to show these specimens as lantern slides, but I found that when magnified the varying quality of definition could not be judged as well as by contact prints.

I will now touch upon the subjects of rapidity and depth of focus. The rapidity of a lens is, as is known to everyone here, governed by the proportion of the effective aperture of the diaphragm as compared with its focal length. But in ascertaining the rapidity of a lens, we must first find the accurate focal length, and also the effective aperture of the diaphragm. These points I shall deal with later when on the subjects of testing and comparing lenses. The diaphragm which is now upon the screen shows in a very clear way why stopping down a lens increases the depth of focus. This represents an ideal condition in which there is a total absence of spherical aberration. If this is present, the rays no longer converge to one point, but cross at different planes, giving an appearance of depth of focus.

What the scientific optician regards as defects in a photographic lens are in many cases not detrimental to its use for portraiture, and may, in certain cases, prove of great practical value. To start with, spherical aberration, which increases the depth of focus and softens hard outlines and harsh lighting, is a serious defect in a lens intended for scientific work, but invaluable to the artist. Curvature of field is another defect which may be turned to advantage by judicious posing; many a sitting figure may be well defined at a larger aperture with a round-field lens than with one having a flat field. Even inequality of illumination may be pressed into service by bringing the head of the sitter well into the centre of the field, and arranging for the drapery to fall upon the less well illuminated margin. Astigmatism we have no use for. It cannot be cured by stopping down, although it may be minimized in this way. Softness of definition of the character now so popular may be obtained in a variety of ways, viz., by the use of a lens such as the Dallmeyer Patent Portrait, in which spherical aberration may be produced to any desired degree without altering its rapidity, by using a single lens in which the amount of spherical aberration is controlled by the diaphragm alone, or by the employment of a lens of the Dallmeyer-Bergheim type, in which both spherical and chromatic aberrations combine to give an image of great softness which is uniform in quality throughout a deep field. Soft results may be obtained by enlarging from a sharp negative, using a soft focus lens for the purpose or by printing through celluloid or paper, but the results are not to be compared with those obtained directly by means of the lens.

The selection of lenses for studio work depends greatly upon the size of the studio and the class of work to be done. As a general rule a Rapid Portrait lens of 11 to 13 inches focal length for cabinets and an anastigmat of about 19 inches for larger pictures will be satisfactory, the large lens being also available for outdoor work. If many large portraits are wanted, it is better to have a portrait lens working at *f*/5 or *f*/6 of about 20 inches focal length, with the diffusion arrangement if possible. Pictures made with such lenses have a tendency to give more plastic

images than can be obtained with the optically superior anastigmat. When purchasing a lens a good idea of its suitability for portrait work may be got by focussing a candle flame at the distance at which the sitter will usually be placed. This light may then be moved in the same plane until its image is near the edge of the plate and note taken of the amount of curvature of field and also whether loss of sharpness is due to this curvature or astigmatism. This rough test calls for no apparatus and yet gives a practical method of comparing or selecting a lens. Very often a lens by an unknown or obscure maker will be found to be nearly equal to one by a first-rate firm. When buying an old lens the surface should be examined. Scratches, even if deep ones, do little harm and greatly reduce the price, but a general dulness of the surface will give flatness in the negative. It is sometimes possible to have such a lens repolished, but this, as well as all other lens repairs, should never be entrusted to any one but the original maker.

## THE RENDERING OF COLOR CONTRASTS

By orthochromatic photography we intend to imply the use of a fully color-sensitive plate, such as the Wratten Panchromatic, combined with a filter of necessary strength, to give approximately the same tone-rendering as that seen by the eye. It must be remembered in the first place that, to the eye, objects are picked out from their surroundings by contrast, and this contrast may be of two kinds—it may be tone contrast or it may be color contrast. In the case of tone contrast, if we imagine ourselves to be dealing with a monochromatic scene, any plate will render tone contrast within a considerable range as seen by the eye; but in the case of color contrast the question will require more careful thought. Suppose that we have two objects, the one superposed upon the other, and separated from each other to the eye purely by their color contrast; such as a red field containing a patch of green. The contrast between them is marked to the eye, although the tone contrast is very nearly nothing, that is to say, the two are of much the same visual luminosity. If we photograph them upon an ordinary plate both are black to it, and we get our contrast represented by one uniform field of black; the color contrast has disappeared, and we have a totally unsatisfactory rendering of that which we are photographing. If, however, we photograph them upon a green sensitive plate, then the green will be picked out from the red as brighter, and we shall get a certain degree of contrast of a kind; but if we photograph them upon a panchromatic plate with a K3 screen, so that we get a rendering of both colors in their true luminosity value to the eye, the contrast disappears, and the colors are represented by a uniform field of gray.

What then must we do to obtain a satisfactory rendering of this color contrast? Clearly it is not possible to render the color contrast accurately in monochrome, so long as we retain the rendering of correct luminosity values for our colors, and consequently we must sacrifice the correct rendering of either the red or the green. If we use a lighter filter or a greener filter, the green will appear the brighter and the red the darker; if we use a deep orange filter, the red will be brighter,

the green darker; and which we shall do must be governed by circumstances. As a general rule, if we must correct wrongly for the rendering of color contrast, it is usually better to over-correct toward the red, since red is a strong color, while green is a weak. For example, in a field of corn of a deep yellow color, we may have poppies standing out which are nearly as bright as the corn, and it is necessary to decide whether we shall render them as brighter or as darker than the corn. Probably on an actual measurement of luminosities they would be a little darker than the corn, but remembering the way in which the strong red attracts the eye, it would seem that a more faithful rendering would be given by over-correcting and rendering the poppies as brighter than the corn. Again, the top of a yellow haystack against a deep blue sky may give a result with perfect orthochromatism where the haystack is indistinguishable from the background. Here again, I personally should be inclined to over-correct, though the individual worker must decide for himself. A thing to guard against always is the danger of basing one's consideration of monotone rendering upon photographs; few people have been trained in engraving, and photographers are apt to take their conception as to the tone value of bright green grass, for instance, from photographs which invariably show it as dark, if not black. Frequently, in a spring landscape, the hedges and grass are almost the brightest things in the whole landscape, and they should clearly be rendered as light grays; but so uniform is the belief among photographers that grass is black, that a rendering as light gray will almost always provoke the comment that the picture was overcorrected.

The most important case of color contrast occurs in the copying of pictures, and for this purpose I some time ago advised a special method, which it is desirable to explain here.

This method depends upon the use of tricolor filters, the plate being exposed first through one filter and then through another, in order to get the desired color-rendering. It is first necessary to remove a common misconception, which one frequently finds repeated in text-books and the technical press, namely, that the effect of printing from the three tricolor negatives on one piece of paper would be to give an orthochromatic result. This would give an isochromatic result, that is to say, one in which all colors are rendered of equal strength, independently of their visual brightness; this results in an excess of brightness in the red and blue, expecially in the blue, and insufficient brightness in the green, the whole color-rendering taken this way being wrong. Suppose that we put a set of filters in front of our lens, fitted in a slide-past holder, so that we can expose the plate through the three filters in succession without removing camera or lens. Then we may give an exposure through the three filters, in proportion to their ratio upon that plate. Supposing, for example, that we have a plate and a set of filters, such that the blue requires 6 times the normal exposure, the green requires 12 times the normal exposure, and the red requires 18 times the unscreened exposure, if we give through the blue twice the normal exposure, the plate will be $\frac{1}{3}$ exposed. Now, give through the green 4 times the normal exposure—the plate is now $\frac{2}{3}$ exposed—and now superpose on this an exposure through the red screen of 6 times the normal exposure; we have now a negative combining our three color negatives in one; but it will not be correct rendering at all, it will give all blues much too light, and greens too dark, and the results will be unsat-

isfactory. With the Wratten filters and plate, owing to the fact that the green transmits a certain amount of blue, correct color-rendering is obtained by giving $\frac{2}{3}$ of the exposure through the green and $\frac{1}{3}$ through the red. Thus, in the example just given, where the ratio of exposures for the three filters was 6-12-18, the correct rendering would be obtained, together with correct exposure, by giving about 8 times the normal exposure through the green and 6 times through the red. Since this proportion of the mixed exposures of green and red gives a correct orthochromatic result, we can exaggerate red or green by increasing the exposure of the one filter and diminishing the exposure of the other. For instance, if we give nine seconds exposure through red, and six seconds through the green, we shall have exaggerated red at the expense of green; on the other hand, if we give 10 seconds through the green and 3 seconds through the red, we shall exaggerate greens at the expense of reds. If we want to diminish greens altogether, and bring up reds and blues, we can use our red filter and blue filter, and so obtain the rendering that we desire by altering the relative exposures through the three tricolor filters.

This method may sound rather far-fetched, but as a matter of fact it has been adopted by some very skilled picture copiers, and in each case where it has been adopted they have, I believe, been perfectly satisfied, and have never gone back to a multitude of yellow screens. A very important point about this method is that all the while one is working one knows how far one is from correct rendering, so that instead of more or less over- or under-correcting by a screen of which the action is somewhat uncertain, one can say quite definitely: "I exaggerated the reds in that reproduction 50 per cent., because it was necessary to pick out the red against the green in the shadows"—a statement which is more scientific and more useful, both to the speaker and hearer, than a statement such as, "I used a rather dark screen for that in order to get over-correction."

A word of warning is necessary here as to the quality of the filters required for this. It will be seen that the three images are literally superposed upon one another, and that the very smallest shift in any one of these images will produce a double image in the result, consequently a much higher grade of filter is required than for ordinary reproduction purposes. It is not sufficient that the images should be of the same size, but they must actually fall on the same place on the focussing glass. This can only be accomplished by the use of filters cemented in optical flats of the very highest quality, or else by the use of gelatine film alone. It will save disappointment if I emphasize the fact that what are usually known as "first class cemented filters" will not do for this.—C. E. Kenneth Mees in *The Photography of Colored Objects.*

## SEPIA SENSE

### An Inexpensive Paper for an Inexpensive Process—Azo

If you have any call for sepia prints you will naturally be interested in a paper that will give you the finest sepia tones with the least expenditure of time, trouble, and money. The Eastman Company has just perfected

a formula that produces splendid sepia tones on their well-known Azo. There is no need to use a higher-priced paper when Azo and the following formula will produce rich prints, such as the samples that have been submitted for our inspection. You could not ask for anything better, and the price advantage is your gain.

*Azo-hypo-alum Sepia Toning Bath for all Grades of Azo*

Black-and-white prints should be made by exposing, developing, and fixing Azo paper in the regular manner, using the Azo developing formula as follows. Dissolve chemicals in order named:

| | |
|---|---|
| Water | 20 ounces |
| Elon or metol | 7 grains |
| Hydrochinon | 30 grains |
| Sulphite of soda (des.)* | 110 grains |
| Carbonate of soda (des.)* | 200 grains |
| Sat. sol. potassium bromide | 5 drops |

*If crystal sodas are used, double the quantity.

This solution will keep indefinitely if placed in bottles filled to the neck and tightly corked.

Fix the prints in an acid hypo bath prepared according to the following formula.

| | |
|---|---|
| Water | 64 ounces |
| Hyposulphite of soda (crystal or granulated | 16 ounces |

Then add the following acid hardener:

| | |
|---|---|
| Water | 5 ounces |
| Sulphite of soda (desiccated) | ½ ounce |
| Commercial acetic acid, No. 8 (containing 25 per cent. pure acid) | 3 ounces |
| Powdered alum | 1 ounce |

After fixing, prints may be given a short rinsing and are then placed in the sepia toning bath prepared as follows:

| | |
|---|---|
| Boiling water (distilled or rain water) | 120 ounces |
| To which add hyposulphite of soda | 16 ounces |
| When dissolved, add powdered alum | 4 ounces |

Boil this mixture for two or three minutes. Then add 20 grains of potassim iodide which has been dissolved in one ounce of water. Next dissolve 20 grains of potassium bromide in one ounce of water and 20 grains silver nitrate in one ounce of water. Pour these two together and add the mixture to the above bath *while hot* and it is ready for use after standing a few hours.

*Notes*

This bath when heated to a temperature of from 120 degrees to 130 degrees will tone prints in from twenty to thirty minutes.

Stir the bath constantly while adding the different chemicals.

The white precipitate formed in the mixing of the bath may be allowed to settle and the clear solution poured off, or it may be used as it is.

This bath may be used repeatedly and as many prints as can be conveniently handled may be placed in the bath at one time.

Prints should be stirred occasionally to insure even toning. Should any print show unevenness in the first stages of toning no harm is done as the toning proceeds to sepia and stops, making it impossible to over-tone.

Long exposure and short development gives warm tones.

## THE USE OF HALF THE LENS

A GREAT many of the lenses used by photographers consist of two separate glasses, or sets of glasses, either of which may be unscrewed from the mount, leaving the other in position. This other will then be found to give a picture perhaps twice as large in scale from the same standpoint as the

complete lens. So that, if we find that some subject is too small on the plate and is surrounded by a lot of details which are not required in the picture, instead of taking the camera nearer to the subject in order to get it larger, we may unscrew one-half of the lens and use the other. This, of course, is well known to every amateur, but there are one or two facts in connection with this use of the lens that may be not quite so well known.

The advantage of this power of altering the scale of the image is, chiefly, that we get the principal object larger and at the same time we increase the scale of the distance, whereas if we get the principal object larger by taking the camera nearer to it, the distance is hardly perceptibly enlarged at all. This is the cause of the strained or exaggerated perspective often seen in photographs, and is far less likely to be met with when half the lens only is used. At times, also, the nearest standpoint is inaccessible, as, for example, if we happen to be photographing across a river.

The half-lens wants considerably greater extension of the camera than does the complete lens; so that, unless the camera has what is called "double extension," it may not be possible to use half the lens by itself without some form of makeshift.

The effect of the removal is often spoken of as doubling the focus of the lens, whereas it has no such regular effect. It may be doubled, or it may only be increased perhaps by half as much again or less. Different lenses differ very considerably in this respect, and, among the cheaper patterns at any rate, different lenses of the same type may differ.

Lenses of the rapid rectlinear type are often used in this way; and it will be found, as a rule, that neither half of the lens has double the focus of the complete instrument, and that the two halves are themselves of different focal length. This is a convenience, as it allows the possessor to have the use of practically three lenses instead of one, and the photographer who has such a lens should lose no time before seeing to what extent the single combinations differ, so that he may know the capabilities of the instrument.

The use of half the lens in this way is often spoken of and written of as using "the black half" of the lens; but it must not be supposed from this that the front half cannot be used. It is customary, where there is not much difference between the two halves, to unscrew the front lens and to use the back one in its ordinary position, and there is sometimes a slight theoretical advantage in doing so. But in actual practice it will be found to make little or no difference, whether the back lens is used at the back or at the front, or whether the front lens is used in either position. The changes may be rung upon them at the wish of the user.

As already pointed out, these single lenses, being of longer focus than the complete combination, require a greater camera extension; and it may happen that the camera will not extend quite far enough to enable the back lens to be used in its ordinary position. In such a case, if we screw it into the mount in the place usually occupied by the front lens, it will be perhaps an inch or more further from the plate, and this inch may be quite sufficient to allow it to be used. A cardboard extension tube carefully blacked inside, may also be useful at times to give just the extra extension necessary.

There is one point in connection with the use of lenses in this way which is sometimes overlooked. A half lens, having only half the number of reflecting surfaces possessed by the complete lens, ought to give a distinctly brighter

negative; but it is often just the reverse. The reason for this is that on the removal of one lens, the thread into which it screwed is left bright, forming a reflecting surface in such a position as to impair the brilliancy of the negative very considerably. It does more when this is outside the camera, that is to say, in front of the lens in use, than when it is behind; but in either case it is harmful. If there is a ring of bright metal to be seen when the lens is unscrewed, a ring of black paper or some similar covering should be slipped over it for the time being.

Whereas with rapid rectilinear and other modern lenses in which there are glasses on each side of the stops, there is no distortion, straight lines in the subject appearing as straight lines in the picture; this does not hold good when only half the lens is used. In such a case, a long straight line such as is often met with in architectural work, will appear slightly curved should it happen to fall anywhere near the margin of the picture.

This is certainly a drawback in architectural and similar subjects; but if the half lens is only used on a plate the same size as the whole lens, and long straight lines near the edges of the picture are avoided, there is not likely to be any inconvenience from this cause.

The alteration in the focal length brought about by the removal of half the lens will make a great alteration in the value of the stops. It is usual to treat these as if they were doubled, F/8 becoming F/16, and so on; and this would be correct if the focus were doubled, but, as has been pointed out, this is only occasionally the case. The best plan is to find out precisely the change in focus, and to make a little table giving the true values of the stops when the half lens is used.

This may be done quite easily, even if the actual focus of the lens is not known.

The camera is turned toward some distant view, and, in the distance, are chosen two objects, which should be as far apart as possible, but not so far apart that they cannot both be focussed on the screen at the same time, whether we use the front lens, the back lens, or the whole combination. They are then focussed carefully with each, and their distance apart in each case is marked off on a piece of paper. When once this has been done, it is an easy matter to find out the true F numbers.

A simple way for those whose arithmetic has got rusty is to ascertain with a foot rule how many eighths of an inch (approximately) there are in these three different distances. Then, to find what the stop marked F/11 on the scale of the iris really is when, say, the back half of the lens is used, we multiply 11 by the number of eighths of an inch which separated the two objects when we used that back half, and divide the result by the number of eighths of an inch which separated them when the complete lens was used. This will give us the real F number of the stop marked F/11 when the back half is used.

It is only half an hour's occupation, with the three measurements before us, to find out and tabulate the corresponding values of all the different F numbers on the scale of the iris, for the front half and for the back half respectively; and once done it may be noted in the pocket book for all future use.

Other ways of doing the same thing will, no doubt, suggest themselves to those familiar with elementary mathematics.

For many purposes the half lens used in this way will be found superior to the whole. For portraiture, for example, it necessitates a longer exposure, it is true; but it allows the camera to be a good deal farther from the

sitter, and so the perspective of the picture is better. The exaggeration that is often seen in the size of the hands and other parts that are too near the camera is thus prevented.

For landscape work also, the half lens has the advantage that it does not dwarf the distance as much as when the shorter focus of the whole lens is used. For night photography, also, the single combination which constitutes the half-lens will be found to be much less likely to give rise to flare spots or ghost images.—HUGH O'CONNOR in *Photography and Focus.*

## METROPOLITAN SECTION P. P. S. OF N. Y.

THE regular meeting of the Metropolitan Section of the Professional Photographers' Society of New York was held at Keen's Chop House on Tuesday, June 6, 1911, at 8 P.M.

Chairman Falk presided, and twenty-two members were present.

The Committee on Drafting a Suitable Testimonial in Honor of the great American Scientist, Dr. John W. Draper, which testimonial was to be forwarded to the New York University, reported that same had been sent in due time.

Chairman Falk announced that the years of labor of the members of the Legislative Committee had at last been crowned with success, the amendment to the bill in relation to the exhibiting of photographs having passed both Houses and signed by the Governor of New York State.

A motion was adopted to have the law regarding the exhibition of photographs printed suitable for framing, and a copy sent to every photographer in the State of New York, with the request that it be framed and hung in the reception room of the studio; also that a circular be printed explaining the law and advising that, for the good name and honor of professional photography, its provisions be rigidly lived up to; and that the Legislative Committee be instructed to do the work at the expense of the Section.

It was also moved and carried that the members of the Metropolitan Section extend a special vote of thanks to those on the Legislative Committee, viz., Messrs. Pirie MacDonald, B. J. Falk, A. F. Bradley, Theo. C. Marceau, and Floyd F. Baker.

There being no further business for consideration, the meeting adjourned for the season.

I. BUXBAUM,
Secretary Treasurer.

## LOOKING PLEASANT

I VISITED the sharp who makes artistic photographs and said, "I wish you'd drop all other fakes, and make a picture of my head." He pushed some screens to let in light, and I was to a chair assigned, a bughouse palace at my right, a canvas thundercloud behind. He screwed my dome of thought awry, and gave my diaphragm a squeeze, and then I heard him briskly cry, "All ready now—look pleasant, please!" My face had worn a look of gloom, but when I heard his cheery call, I sprung a smile that filled the room and

dimmed the gaslights in the hall. And when the photograph was made, that smile was placed on record there; the years may pass, it will not fade, and folks who see it will declare, "He must have been a pleasant jay! He smiled profusely and with vim; the world would be less bleak and gray if there were more glad guys like him!" I keep the picture on the wall, where I can view it day by day, and when some evil thing befalls, it helps me drive the blues away. "I looked as glad as that one time," I mutter, as I toil away; "and it would be a beastly crime to look less happy any day." A scowling face will gain no friends, nor banish woe, nor heal disease; so, when a cloud of grief descends, say to yourself: "Look pleasant, please!"—WALT MASON in the *Toronto Star*.

## TRADE NOTES

FROM the EASTMAN KODAK CO. we have received samples of Azo paper, grades A, B, and E, toned with their new Azo-hypo-alum sepia toning bath, full particulars of which we are glad to reprint elsewhere in this issue. A better sepia tone could not be desired, nor could it be produced on even a higher-priced paper. This is one of the few things that offer economy and quality at the same time. Get some Azo and try the formula.

OTTO GOERZ, of 39 West 42d Street, New York, reports the theft of the following cameras from his store:

"A 4 x 5 GOERZ Ango Camera with Goerz Dagor lens No. 1, No. 227068, and a GOERZ Vest-pocket Tenax with GOERZ Dagor lens, old model."

If these cameras should be presented to your place please hold same and advise Otto Goerz.

AN EVEN DOZEN DEFENDER OFFICES. Another branch office has been opened by the Defender Photo Supply Company—this time in Los Angeles. The office is conveniently located at 200-209 Broadway Central Building on South Broadway, and will carry a very complete line of Defender papers, dry plates, and chemicals. Martin L. Wolver is manager of the new branch. He comes to the Defender Company from Burke & James, in Chicago, and has been connected with other well-known photographic concerns. The Los Angeles office is located in a country of wonderful growth and prosperity, and will enable the company to take care of trade in southern California with greater facility and promptness.

FROM the Ansco Company we have received a copy of their handsome advertising folder, *Another Helping Hand from Ansco*, showing a series of clever pictorial advertisements prepared specially to help the dealer make sales and increase the number of camera users. Any dealer handling the Ansco line who is not making full use of this advertising service is missing a good helper.

THE Ansco branch office at Minneapolis, Minn., has had to seek larger quarters, and have moved from South Fifth Street to 416 Third Ave., South, where they have a modern and fully equipped depot for the distribution of Ansco products.

THE advertisement of the Morton Print Curver in our last issue contained two errors to the correction of which we wish to draw attention. The No. 2 and 3 Curvers should have read as 3 and 4, and are for 12 and 14 inch prints respectively. The address given as Nineteenth Street and Nineetenth Ave. should have been Nineteenth Street and Second Avenue. Mr. Morton writes that one of the most satisfactory things about the sale of his Curver is the enthusiastic way it is being endorsed by those photographers who are using it.

We have just received from GEVAERT-WERKE, Berlin, one of the largest photographic paper factories in Europe, a copy of their recently revised *Gevaert Handbuch*, a handsomely printed book of information concerning the manipulation of photographic papers, more especially Gevaert papers. It is printed in German and will interest any of our readers who are familiar with the language, A copy can be had by writing CARL HALKC, Lützwostr. 9, Berlin, W., Germany.

IF you have not investigated the Ingento Lock-joint Frames you ought to do so for your own information. With four strips of moulding, size according to your need, and four steel clips, you can make a strong and rigid frame in less time than you could write out an order for a framemaker. The moulding can be bought in any length and style, and for about half the usual cost you have as good or even better a frame than the ordinary framemaker can supply. Send to BURKE & JAMES, Ingento Building, Chicago, for a descriptive circular. It will interest you and may save you money.

# WILSON'S PHOTOGRAPHIC MAGAZINE

A MONTHLY MAGAZINE FOR PRACTICAL PHOTOGRAPHERS

Founded in 1864 by EDWARD L. WILSON
MRS. EDWARD L. WILSON, Publisher and Proprietor
L. WINIFRED WILSON AND T. DIXON TENNANT, Editors

EDWARD L. WILSON, 122 EAST TWENTY-FIFTH STREET, NEW YORK
*Entered at New York Post-office as Second-class Matter*

**Yearly subscription in advance, United States and Mexico, $3.00; Canada, $3.25; Foreign Countries, $3.50. Single copies, 25 cents. Subscriptions begin with current issue unless otherwise ordered. Original manuscripts on photographic subjects are solicited, and, if accepted, will be paid for on publication.**

## EDITORS' TABLE.

WE regret to announce the death of Mr. MILTON BRADLEY, of Springfield, Mass., which occurred Tuesday, May 30th, at seventy-four years of age. Mr. Bradley was best known as the pioneer of the kindergarten movement, and was the largest manufacturer of kindergarten supplies in the world. In the field of education his name has long been known and honored, and though the man is called, his work lives after him, a lasting memorial to his ingenuity, nobleness of purpose, and strength of character, In the photographic field he is best known for the splendid line of trimmers which bear his name.

---

THE following letter has just been received from President Harris:

WILSON'S PHOTOGRAPHIC MAGAZINE.

Gentlemen: I have just learned that the Northern Steamship Company has had some trouble with their boats, one of them being destroyed by fire. They are afraid that their Duluth boat will not be running in July, consequently will you insert somewhere in your columns the fact that the Anchor Line Company has a boat leaving Buffalo, July 12, arriving in Duluth, July, 17, and that anyone wishing to take the trip will find this company a satisfactory one. Their office is in Buffalo, N. Y., where they can be reached concerning staterooms, etc.

Yours respectfully,
G. W. HARRIS.

WASHINGTON, D. C.

---

THE following letter from President Garo is self-explanatory. Further details of the exposition will be found elsewhere in this issue.

EDITOR, WILSON'S PHOTOGRAPHIC MAGAZINE:

The unprecedented demand for space from the manufacturers and exhibitors at the forthcoming Convention of the Photographers' Association of New England has made it necessary for the Executive Board to change its original intention of holding the Convention at the Bridgeport Armory in September. The committee has selected Steeplechase Island, which offers an opportunity for holding a photographic exposition which the coming convention of the Association has actually developed into, and the Board is now busily preparing plans of the Island for the inspection of the members and exhibitors.

This change in plan makes it possible for the Board to assure every manufacturer as much space as he requires and an absolute equality of opportunity to display his wares. The entire Island will be taken over for the purposes of the exposition, and for the first time since the days of Celeron the old-time association spirit will prevail.

I am more than gratified over the showing made by the Association thus far, and the assurance received by the Board convinces me that the coming Exposition will achieve a great success and will establish a new mark in convention work.

An entire building will be devoted to the display of photographs, and from absolute bookings already made I can safely promise the visitors and members the greatest exhibition of photographs ever gathered in America.

Full details of the Exposition and Convention are being prepared and will be sent forward to you in due season.

Cordially yours,
J. H. GARO,
Pres. P. A. of N. E.

---

FROM Texas the following:

Ladonia, Texas, May 31, 1911.

EDITOR, WILSON'S PHOTOGRAPHIC MAGAZINE, NEW YORK.

Dear Sir: You will please announce through your valuable magazine the following change of date: The Convention of the Professional Photographers' Association of Texas will take place at Houston, on August 22, 23, and 24. This change was made as a matter of convenience, and is one week later than originally intended.

Yours truly
A. M. HOWSE,
Sec. P. P. A. of T.

By The Elliotts, Austin, Texas

*Winners of Inter-State Prize, Oklahoma Convention,* 1911

# WILSON'S PHOTOGRAPHIC MAGAZINE

FOUNDED IN 1864 BY EDWARD L. WILSON

VOL. XLVIII AUGUST, 1911 No. 656

## THE ST. PAUL CONVENTION

THE St. Paul Convention of the Photographers' Association of America has added another success to the growing list of national successes. President Harris is to be congratulated on having placed the St. Paul Convention third in the list for attendance, Rochester, 1909, heading it, with Milwaukee, 1910, second.

The official records show that 1450 members were enrolled before the close of the St. Paul meeting. As if proving that St. Paul is the centre of the country, there were delegates from Winnipeg in the North, Dallas, Texas, in the South, Atlantic City in the East, and Seattle in the West; the country generally was well represented.

The splendid program was carried through with but two unavoidable omissions, and as promised, Herr Duhrkoop and his talented daughter carried through an instructive and interesting course of practical negative making.

The Congress of Photography is getting a fuller idea of its possibilities, and becoming more practical every year, and should ultimately become a very useful body with a definite purpose.

In place of the usual presidential address, President Harris gave out a number of suggestions, the best being one for the dividing of the country into two sections, East and West, and alternating the convention each year. This suggestion was discussed and favorably reported on by the Congress, and as a result the 1912 Convention will be held in Philadelphia. Without such an arrangement there is always the danger of one section of the country voting the convention consecutively into that section. But for this suggestion the possibility that Kansas City might have secured the 1912 meeting, making three successive Western meetings, would doubtless have raised the question of the desirability of two associations, an Eastern and a Western.

Some of the other suggestions we will take up in a later issue.

The St. Paul Convention broke the

record for the number of manufacturers and dealers represented, and thanks to abundant floor space and uniformity of booths, an unusually attractive effect was obtained and enhanced by decorative plants.

The Women's Federation was on hand in good force, and provided an excellent lecture, given by Nina Stevens, of Toledo.

The choice of Philadelphia for the 1912 meeting is a wise one. It could not be held much further east, and Atlantic City, with its many attractions, is near enough but not too near to interfere with the business of the Convention. This being Philadelphia's first "National," the local photographers will leave no stone unturned to make it a big success. Philadelphia, photographically, ranks high and has a reputation to maintain.

The officers were elected as follows: President, Ben Larrimer, Marion, Ind.; First Vice-President, C. F. Townsend, Des Moines, Ia.· Second Vice-President, W. H. Towles, Washington, D. C.; Treasurer, L. A. Dozer, Bucyrus, Ohio.; Secretary, Manly Tyree. They are all seasoned convention workers and well able to give a good account of themselves when the time comes.

A detailed report of the St. Paul meeting will be given in our next issue.

## THE NEW ENGLAND CONVENTION, BRIDGEPORT, CONN., SEPTEMBER 11 TO 14

THE Bridgeport Convention of the New England Photographers' Association is beginning to assume national importance, and gives more promise of living up to its slogan of "Next to the National" than it has in many years. All restrictions have been withdrawn from the picture exhibition, and a very fine show is promised. A novel feature, for a New England Convention, will be the demonstration tent where new processes and goods that have not been shown before will be introduced. Inventors are specially invited to show new devices. President Garo has introduced an innovation by the appointment of a number of the most prominent photographers throughout the country as Honorary Vice-Presidents, who will be on hand to assist individual photographers in securing advice and instruction.

The change of plans for the New England Convention, which gives us the Crystal Palace on Steeplechase Island for an art building, makes it possible for us to extend to the photographers of the United States an invitation to put their work on view side by side with the work of hundreds of other photographers all over the country.

In former years there has always been the fear that too many pictures would be sent by individual photographers, or that the space at the disposal of the Association was too small, and in consequence restrictions have been made which frequently prevented members from displaying a full and comprehensive collection of photographs. This year the convention extends to all of its members and to photographers generally an invitation to present a display which will fully represent their best endeavors.

Every picture sent to the convention will be hung if the man who sends it says that the collection represents the best photographic work he can do. All other restrictions have been withdrawn, and it remains for the photog-

raphers of New England and the adjacent territory to coöperate with us in making a display of photographs which has never been equalled on the continent. Ample arrangements have been made to display the collection of "one man" exhibits, which have been promised President Garo by the leaders of photography in every state, so that the members and exhibitors need have no hesitancy in making their exhibit completely representive of the things which they are doing.

President Garo believes that the greatest educational feature of a photographic convention lies in the exhibition of photographs, and for this reason alone the bars have been opened to everyone alike to show his best.

### *Attendance Will Break Records*

Attendance at the New England Convention this year will be greater than at any prior meeting of the Association, and it is the special desire of President Garo that every exhibitor at the Convention be present in person, so that a just comparison can be made between the work of the exhibitor and his fellow-workers.

To assist the individual photographer in securing advice and instruction, President Garo has appointed the following board of honorary Vice-Presidents:

B. Frank Moore, Cleveland, O.; C. L. Lewis, Toledo, O.; Geo. G. Holloway, Terre Haute, Ind,; Clarence Hayes, Detroit, Mich.; F. Scott Clarke, Detroit, Mich.; M. H. Steffens, Chicago, Ill.; S. L. Stein, Milwaukee, Wis.; J. C. Strauss, St. Louis, Mo.; E. E. Doty, Battle Creek, Mich.; Ryland Phillips, E. Goldensky, Wm. Shewell Ellis, Wm. H. Rau, of Philadelphia; Pirie MacDonald, B. J. Falk, E. B. Core, Dudley Hoyt, A. F. Bradley, Oliver Lippincott, Col. Theo. Marceau, of New York; I. Buxbaum, Brooklyn; Geo. W. Harris, Washington, D. C.; Manly W. Tyree, Raleigh, N. C.; Chester Bushong, Worcester, Mass.; H. J. Seeley, Bridgeport, Conn.; H. A. Bliss, Buffalo, N. Y.; J. E. Mock, Rochester, N.Y.; A. T. Proctor, Huntington, W. Va.; F. A. Rinehart, Omaha, Neb.; F. R. Barrows, Brookline, Mass.

These appointees constitute an Honorary Advisory Board of the Association, and will be on hand to give to the members the benefit of their experience and advice in picturemaking.

Pictures may be sent at once to Vice-President J. P. Haley, Bridgeport, Conn., and will be promptly acknowledged upon their arrival.

### *Demonstrations*

A great tent is to be erected on the exposition grounds which will be given over entirely to demonstrations by the various manufacturers represented. Ample opportunity is to be given every manufacturer of photographic material to demonstrate new and improved processes for the making of photographs.

Mr. C. S. Cochran, Bridgeport, Conn., has been appointed to complete arrangements for the demonstrations, and manufacturers desiring to reserve time for the exploitation of new goods and methods should at once communicate with Mr. Cochran, giving full details of the work it is desired to do, together with the name or names of the demonstrators.

### *New Inventions*

To encourage invention the Executive Board has arranged for the free display of any new and novel device

of interest to photographers. *Only* two rules have been made to cover this new and interesting feature:

1. The exhibitor shall become a member of the Association.

2. The device or process shall not be actually upon the market as a manufactured product.

The object of this separate and distinct exhibition is primarily to bring the photographic inventors directly in touch with manufacturers. Bridgeport is a great manufacturing centre and offers splendid opportunites for the promotion of new business enterprises. Mr. H. J. Seeley, President of the Photographers' Club of Bridgeport, Bridgeport, Conn., is in charge of arrangements for the Inventors' Exposition.

### *Buttons Now Ready*

Secretary George H. Hastings is anxious to deliver the 1911 buttons to the members prior to the assembly of the convention, and as there will be a great crush on the morning of the opening members are urged to send in their dues at once.

The button this year is unique. It bears the signature of President Garo and is handsomely embossed in gold and red enamel.

### *Dues*

| | |
|---|---|
| New members (employers), membership, $2.00; dues, $2.00 | $4.00 |
| Old members (employers) dues | 2.00 |
| Employees, no membership, yearly dues | 1.00 |
| Associate members (manufacturers, dealers, and photographers residing outside of the New England States and Maritime Provinces) | 2.00 |

Remit above amounts to George H. Hastings, Secretary P. A. of N. E., Haverhill, Mass.

### *Reduced Railroad Rates*

The railroad associations have granted a rate of a fare and three-fifths to all attending the convention, upon the certificate plan. You pay full fare at your starting point, and insist upon a certificate from the ticket agent, which is to be *deposited with the secretary upon your arrival at the hall*, and when signed by him and the passenger agent, who will be in attendance Wednesday and Thursday, will allow you to get a return ticket for three-fifths regular fare. A fee of twenty-five cents has to be paid to the passenger agent upon indorsing your ticket at the hall. The certificate plan applies to any railroad fare costing seventy-five cents or more for a single ticket to Bridgeport. Attend to this a day or two before starting on your trip.

## A CONVENIENT COPYING STAND

BY A. E. SWOYER

FEW professional photographers, especially in the smaller cities, can afford to neglect the additional income offered by commercial photography; many amateurs would find it profitable to take up. At the present time most photographers handle that branch of commercial photography involved in architectural work or in similar lines, but comparatively few are ready to handle the preparation of advertising cuts, catalogues, or holiday circulars. There should be a field, for example, in the preparation of postals for the

local jeweller showing new additions to his stock at holiday time; an up-to-date merchant would be glad to have such cards, which could be mailed to his patrons with the compliments of the season, and prove not only a graceful acknowledgment of past favors, but a good business getter for the future. Yet how many professionals work up this trade, and how many are equipped to handle it, should it be secured?

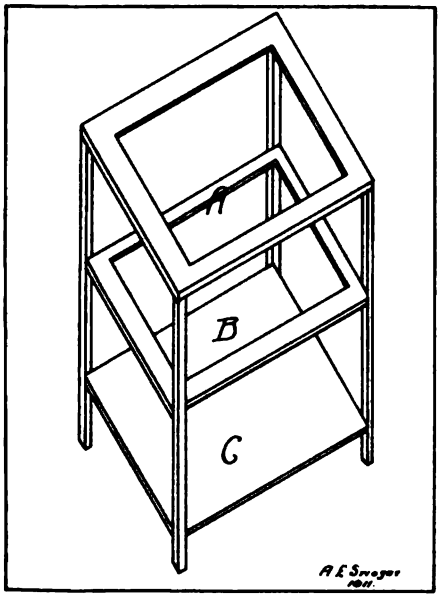


The average workman, if such a problem were suggested, would either advise the customer to send his work to one of the large houses, or would attempt it himself by tacking the article to a board or suspending it by a string, get the illumination as even as possible, and expose. Then in blocking out on the negative, softening shadows, and touching out the spots where string or tacks showed, he would do enough hand work to eat up his profit, or else turn out a job which would be a credit neither to himself nor to the merchant.

A great deal of such work must be done at prices which do not allow for the maximum of fussing over a negative; forgetting the money consideration, it is more workmanlike to avoid blemishes than it is to remove them. Most of the troubles experienced in this class of work are in arranging the object to the best advantage and securing even illumination; it is obvious that it is easier to do both when the object is lying flat than when it is necessary to tack it up.

In order to avoid the use of a tilting head tripod, to secure rigidity and to be able to do such work with the most speed and convenience, the writer constructed a stand as shown in the drawing. This consists simply in a table having a fixed top and bottom, with a movable slide between the two. In the top of this table, *A*, a hole is cut of sufficient size to admit the bellows and running board of the camera, but not the body. The movable slide *B* has a hole cut out also, of such a size that a large sheet of glass may be laid over it. The drawing does not show a method of holding the sliding piece in position; it may be arranged with strips of spring brass underneath, their edges pressing against the legs of the table; or holes may be bored in the legs at calculated distances for various sizes of copy (as full size, half-size, etc.), and the board held by pegs slipped into these holes. The latter method is the simplest, and by its use one is able to effect the reduction desired without calculating each and every time.

The use of the sheet of glass in this stand is a great advantage, as a side light may be used to advantage in imparting an impression of roundness and solidity to the object; with an opaque backing, however, such a light throws objectionable shadows, which are overcome by the use of the glass. The background, which rests on the bottom of the table *C*, is so far removed

from the article to be photographed that its texture is not noticeable. To use the stand, simply place the objects upon the sheet of glass, set the slide *B* for the reduction desired, place the background on *C*, lower the camera bellows through the hole in *A*, and expose as usual.

Since commercial work does not require any unusual skill, and as the outfit required is that common to most studios, the addition of the stand described will enable almost any photographer to turn out good work rapidly, with the minimum of labor and the maximum of certainty.

## THE PHOTOGRAPHIC CONVENTION OF THE UNITED KINGDOM

[The Photographic Convention of the United Kingdom, unlike our Photographers' Association of America, is not a strictly professional photographers' gathering. It was founded twenty-six years ago "for the advancement of photography, and to afford opportunities for personal intercourse and exchange of ideas among those interested in the art, from all parts of the United Kingdom." As shown by the President's address, photography in its broadest sense is thoroughly covered. This year's president is Mr. J. B. B. Wellington, head of a well-known photographic manufacturing concern and also an equally well-known amateur photographer. The twenty-sixth annual convention was held at Exeter, July 10 to 15. We are glad to reprint from our contemporary, *The British Journal of Photography*, Mr. Wellington's interesting presidential address.—Eds. W. P. M.]

### THE PRESIDENT'S ADDRESS

Perhaps the best form for a Presidential address at this time is a brief survey and record of a few of the things photography has done and is doing. First, perhaps, it may be well to remind ourselves of the youth of our art-craft, for a realization of its great advances in less than a century will give us confidence and encouragement in looking to the future.

#### *An Historical Note*

As the beginning of photography must be dated at the time when the knowledge of how to *fix* the sun-image was announced to the world, we cannot put it earlier than Fox Talbot's paper of January 25, 1839, or Daguerre's of February 6 in the same year, though the oldest photographic print now in existence bears date in the autumn of 1835, in the writing of Henry Fox Talbot, who made it. It is important to note that this early print is a negative, on paper.

The energy with which the discoveries announced in 1839 were taken up and developed, is evidenced by the fact that Robert Hunt, Secretary of the Royal Cornwall Polytechnic Society, was able to produce in 1841, *A Popular Treatise on the Art of Photography*, with a positive and a negative photograph as frontispiece. From this book the general interest in photography may be said to have begun, so that our process is exactly seventy years old, and in that time it has, indeed, worked a marvellous revolution in the methods of investigating, recording, and distributing information.

### *Some Recent Achievements*

The advances made in photography are so numerous that one is apt to overlook them, and to accept as commonplaces what ought to be received as marvels. Even within the past twelve months we have had the intensely interesting and important work by Prof. R. W. Wood, of Johns Hopkins University, described in the thirteenth Traill-Taylor memorial lecture on September 27, on photographing with the invisible rays at both ends of the spectrum. Prof. Wood showed, in most striking lantern slides, how different the world would look if man's eyes were sensitive to the infra-red, or to the ultra-violet, instead of to those portions of the spectrum by which they actually are affected.

A work that is in some respects even more striking, though it depended only upon the application of well-known methods, was done early last year at Finmarken, Arctic Norway, by Prof. Carl Stoermer and Prof. Birkeland, of the University of Christiania. They made a long series of studies of the aurora borealis, photographing it simultaneously from two stations nearly three miles apart. Knowing the length of base between the two cameras, and including the same stars (as well as the aurora) in the pair of plates, it became possible to calculate the exact distance of the phenomenon from the observers, the actual area it covered, and its height above the earth, thus helping to solve one of the most controversial questions of science.

Perhaps the most astounding advance of the last year is to be found in the Pollak-Virag system of telegraphy, in which the record is made by throwing a point of light upon a moving strip of sensitized paper. The electric current controls the motion of this pen of flame so that it writes the message, letter by letter, upon the sensitive paper surface. An incidental advantage of this improvement is the immensely increased capacity of the telegraphic system, for it is claimed that with a staff of only two expert operators, forty thousand words—the contents of four ordinary newspaper pages—can be sent over one wire in an hour.

### *Society Matters*

In photographic society life the past few years have seen substantial advance. The principle of affiliation and federation has been developed very successfully, and there is reason to believe that the growth will continue. The establishment and successful working of bodies so specialized as the Society of Night Photographers and the Nature Photographic Society, with a magazine of its own, shows a healthy tendency toward specialization in applied photography; and exceedingly satisfactory progress has been made by the Professional Photographers' Association (whose President. Mr. F. P. Moffat, is with us at this Convention). The P. P. A. has not been content with its good work on old lines, but last year it established, and this year has repeated, a trade conference which seems to have been an unbounded success from the practical and commercial point of view.

If there is anything to regret in the society life of the immediate past, it is that division of forces in the pictorial world which has led to our having three annual exhibitions in London, all aiming to present the best in pictorial photography.

### *Photography in Illustration*

Photography for the press, considered in the widest sense, has become

an important industry. There are about 300 separate plants for half-tone block making in the United Kingdom alone, as well as many firms using photo-lithography, collotype, and photogravure. The photographers who devote themselves entirely, or mainly, to picture-making for the newspapers have become a strongly specialized branch of the profession, and some of their recent work in the way of views, of sports, and interiors with figures, in the dim lights of courts and other halls, is truly marvellous. These men have increased in numbers, so that it has become a question with some of the societies of journalists whether they shall be admitted to membership or not. At first, they came in naturally as descriptive reporters, but whether this shall be continued is a matter of question.

The prejudices of the press have been broken down, so that almost every newspaper now uses topical illustrations occasionally, and the enormous popularity of journals consisting largely of this class of illustration has recently been evidenced by the opening of a London office for the *Daily Sketch*. This paper, founded only a little while ago in Manchester, is now printed and issued simultaneously in Manchester and London.

In book illustration recent advance has been great, both in reproduction by photo-mechanical means and in the use of photographic originals. Not only is every well-equipped exploring party accompanied by a photographer, but every mountaineer, traveller, or sportsman who thinks of writing a book realizes that the ready camera is as essential as the fluent pen. The next great step in this direction should be taken almost immediately, when the Ives Tripak system promises to enable the tourist to expose a set of three-color records as easily as he now makes his monochrome snapshot.

The application of photographic illustration to tradesmen's catalogues, price lists, and advertisements of all kinds has seen much recent development, but our own country is far behind the United States, and perhaps also in the rear of Germany, in the extent to which photography is used in commerce, though the quality of this work in Britain is as high as anywhere in the world.

### *Lantern and Cinematograph*

Photography in teaching has progressed unevenly. If we compare the few rude illustrations in the school books from which geography and natural history were taught in our own young days with the elaborately and truthfully illustrated books of history, nature, and travel that we see today, there is much cause for satisfaction. But if we look to the use of the camera itself in the schools, and of the optical lantern as a means of demonstration, it seems as if the schoolmaster has been far less progressive than the pressman or the commercial advertiser. It must be some twenty years since one of our past presidents, Mr. C. H. Bothamley, wrote a little book upon the lantern in teaching, and it seemed as if all schools would soon take up this invaluable aid. Unless the schools move in this matter very soon, they may lose their opportunity and find a portion of their work of instruction going into the hands of the motion-picture shows.

Photography as a spectacle is suggested by this reference to motion-pictures, and it seems a curious "reversion to type" when we remember that eighty years ago Daguerre was a painter and exhibitor of dioramas, and realize that today the most important

single interest in photography is the popular exhibition. Its turnover is far larger than that of the portrait-making profession, though it is a growth of only a few years. Quite recently the increasing use of non-inflammable film has given promise of still further development of kinetographic possibilities; and good progress has been made with motion pictures in color—the first public display of which was at our Convention in Southamptom in 1906 by Mr. Friese Greene. The method now in use is different, the work of Smith and Urban, and has been a public entertainment for nearly three years in London.

The kinetograph is not only being used as a spectacle, but in many lines of scientific research and demonstration it has proved most useful. Our member, Mr. F. Martin Duncan, has done, and has shown us from time to time, much pioneer work in this field. Now, kinetography is being largely used in the teaching of medicine and surgery, recording and displaying the details of operations, and the study of epilepsy, rhythmic insanity, and other abnormal movements.

*Photography as a Scientific Recorder*

I can only very briefly remind you of the many ways in which a spot of light, playing upon a clock-driven strip of bromide paper, takes notes that would need the services of thousands of trained observers. It does work that would be impossible without its aid, if only because of the cost. The changes of sunshine and cloud, from minute to minute, in almost all parts of the world, temperature, barometric pressure, changes of earth-magnetism, earth-tremors, varying from those which man cannot discern to great historic cataclysms, and many other classes of fact, are recorded by the pen of light on the sensitive paper.

In microscopic work the camera for recording and the optical lantern for displaying are doing more and more important work every day, especially since the single-plate color processes have become available.

Photography in astronomy has made wonderful strides in recent years, especially in the work of the Harvard Observatory, which uses photography much more fully than any other observatory in the world. By tacit agreement with the other observatories it has been given the monopoly of certain methods which it first devised, because duplication of the work would be wasteful.

A striking proof of the value of photography in astronomy is given by the experience of the Harvard College Observatory in discovering new stars and distinguishing variables. In 1863, when Harvard identified its first variable, 113 were known to the world, and in the next five years, while Harvard discovered three, the rest of the observatories found over a hundred among them. In the single year 1901, however, with a systematic photographic survey, Harvard discovered 593, a considerably greater number than had been found by all the other observatories combined in their whole history. In 1905 Harvard discovered no less than 1632 variables, and the total for this observatory up to April, 1910, is 3281, as against a total of 946 for all the other observatories of the world combined.

Three different methods are used, perhaps the most interesting being the superposition, in a sort of retouching desk, of a positive and negative of the same portion of the heavens and both on exactly the same scale. If a positive made today is superposed on a negative made a year ago, any star that

has changed materially in the interval is almost instantly detected by the trained eye of Miss Fleming, who has developed this side of the work under Prof. Pickering, and who can examine a few hundreds of records in a day, covering millions of stars. If the stars were just the same at both times of photographing, the dark spot on the negative would exactly cover the transparent spots on the positive, and when they are carefully superposed, any failure to do this becomes easily visible.

When an unknown heavenly body is discovered by any other observatory, its exact position is reported to Harvard, which photographs the whole of the visible heavens every clear night. The file of negatives of the proper region is then examined, with the result that it is possible to fix the exact night on which that particular object first impressed itself upon the plate.

New stars, or novæ, are not merely stars that have not previously been noticed, but are stars which have appeared in parts of the heavens that were blank. Before 1890 six such stars had been discovered, since then nineteen more have been added, of which Harvard contributed fifteen, while the rest of the world scored four. The detecting of the variables and novæ on the negatives is the work of women specially trained, and was first established by the late Mrs. Williamina Fleming, who personally discovered ten of the Harvard novæ, while her assistants, Miss Cannon and Miss Leavitt, found three and two respectively.

The recent researches into color-sensitising and light filtering, though first intended for photomechanical three-color work, have been followed by Prof. King, who is the head of the photographic department at Harvard, and who finds them useful in many photo-astronomical studies.

Perhaps I need hardly remind you that the cumulative action of light upon the photographic plate has enabled astronomers to photograph myriads of stars too faint to be seen by the human eye, even with the most powerful telescopes.

The study of Mars, one of the most fascinating of astronomical subjects, has recently been aided by photography, and Prof. Lowell, of Flagstaff Observatory, in Arizona, has made large numbers of photographs with a view to deciding whether the so-called canalæ have objective existence. The difficulties are enormous, because the canalæ are so nearly the same luminosity as the surrounding parts, and because the motions of the air interfere with definition. The results are inconclusive at present, for while those who are familiar with the canalæ as seen by visual observation, can trace them and even find much new detail in the photographs, those who doubt the objective existence of the markings are satisfied that the photographs confirm their attitude of scepticism.

### *Professional Photography*

Professional photography has made great progress in the past quarter of a century, and especially in the last ten or fifteen years. The average status and the financial stability of the professional have increased very satisfactorily. And the average profit returns have increased also with improved business methods; though this may be doubted by some who remember a few of the great firms in the "good old days," and forget the many men who struggled and failed.

While some of the modern photographers specialize much more than did those of old time, others have become even more general, or have specilized on new lines. Photography

for the blockmaker and for the manufacturer's catalogue provides much new work; night photography, both in the studio and at banquets, has grown; stage photography, the copying and enlargement of miniatures, daguerreotypes, and old faded originals and many other branches are made the subject of successful specialization.

### *Color Photography*

Photography in natural colors has passed its "boom" of a couple of years ago, but, so far from being dead, is in a state of life and growth. Simplification of the autochrome formulæ and instructions, devising of satisfactory means for copying autochromes by the light of magnesium wire, and the development of autochrome portraiture by flashlight, have all taken place within the last twelve months. In the same time the "Thames," the "Dioptichrome," and the "Omnicolore" plates have become commercially available, each offering special qualities and advantages. Several professional photographers have adopted the single-plate color transparencies in their portraiture, and one (The Dover Street Studios) has recently begun to offer color portraits on paper, at commercial prices, in small quantities, using the autochrome as a basis. The use of the single-plate color process for illustrating lantern lectures has not grown so rapidly as might have been expected, because of the density of the transparencies produced; but great improvements in this direction have been made and others are promised almost immediately, so that developments may be expected even in this direction. Meanwhile, the autochrome has found increasing use in portraiture, in making originals for half-tone reproductions, as a means of advertisement and sale for paintings, objects of art, stained-glass windows, rare flowering plants, carpets, tapestry, and other objects in which color is important.

I have already referred to the Ives Tripak and to kinetography in natural colors.

### *The Progress of the Photographic Industry*

The trade in the manufacture and handling of photographic materials has grown almost beyond conception, so that it is very difficult to form even an estimate of the amount of capital invested, and for the most part earning profits that compare very well with those of any other industrial investments. Of late everything has tended to simplification, to giving the photographer apparatus and materials with which it is almost impossible to go wrong. This has shifted the interest in photogrraphy from the technical side to the applications, so that the amateur no longer studies photography for itself, but uses it as a means to various ends, while the professional, who was essentially a technician, is becoming essentially an artist, or a commercialist, or in some cases a combination of both.

It is a long stride, in effect, from the daguerreotype, or even the wet collodion plate, and home-sensitized paper to the varied dry-plates and the many classes of papers of today; yet so recently as thirty years ago dry plates were as novel as the natural color plates are today, and preserved sensitized paper was quite a new article of commerce. The common print-out papers of today are not twenty, and the development or gaslight papers are only about ten years old.

Lenses have reached great perfection and specialization along different lines, when we can have liquid lenses

using an effective aperture of twice their focal length, the modern anastigmat with its marvellous definition, the telephoto lens available even for snapshots under favorable conditions, and photomechanical lenses made of glass specially manufactured to pass the ultra-violet rays which are stopped by the glass of our ordinary lenses.

The next important development in apparatus seems likely to be in the direction of very small plate cameras, using lenses of two-inch or even shorter focal lengths, with a view to making large numbers of exposures and enlarging from the negatives that are most successful. The great advantage in depth of definition that is given by very short-focus lenses at relatively large aperture has been demonstrated by the kinetograph, and the outfit of the future seems likely to be waistcoat-pocket size, with a fixed enlarging apparatus for artificial light. Probably the developing and enlarging will tend to be more and more done by the dealer and professional, and the standard-size enlargement from the standard-size negative will cost no more than the same sized contact print does at present.

### *A Patriotic Thought*

One of the recent signs of the times has been the growing appreciation of British manufactures, both in apparatus and materials. British plates and papers have always held the foremost place in the open markets of the world, and so has British apparatus in the higher qualities. During recent years some of the Continental lens manufacturers have made great commercial advances in the expensive goods as well as in the cheap bread-and-butter lines, and both American and Continental cameras have captured a large part of the world's market by their ingenuity, attractiveness, and cheapness. Latterly, however, there have been signs of change. There is a growing demand for British plates and papers in the open markets and even in the tariff-guarded markets of the Continent and the United States. The British-made camera, too, is taking a preferred position in many fields, while in Britain and throughout the British Colonies and Dominions this feeling is growing strongly. Nowhere is this shown more than in Canada, where British firms handling certain lines of Continental-made cameras under their own names have been driven to a rather curious expedient. To obtain admission as British-made goods, it is necessary to certify that a certain proportion of the price is represented by British labor, and to do this the cameras are all supplied with British-made lenses, and entered as complete articles, lens included.

I believe that the preference for the British-made goods is based on a correct idea—the recognition of a high standard of quality and workmanship, and I am confident that the next ten years in the history of the photographic trade will see British manufactures more than holding their own.

J. B. B. WELLINGTON.

---

*Retouching Media.*—Many workers like to prepare their own retouching media, and the two following formulas will be found reliable ones for the purpose:

I.

| | |
|---|---|
| Sandarac | 1 oz. |
| Castor oil | 80 gr. (by weight). |
| Alcohol | 6 oz. |

First dissolve the sandarac in the alcohol, then add the castor oil, and shake well.

II.

| | |
|---|---|
| Pale resin | 1 oz. |
| Oil of turpentine | 1 oz. |
| Oil of lavender | 2 oz. |

Either formula will yield thoroughly good media.

# THE QUESTION OF BACKED PLATES

## Some Notes on the Composition of Backings

BY RICHARD PENLAKE

At one of the most go-ahead photographic societies in London recently there was a lengthy debate on the question as to whether backed plates were of any real use, and so much superior to the unbacked variety as the theorist and manufacturer would have us believe. In these days of excellent backings, and commercially backed plates, when one may so easily test them and so "prove the pudding," it may seem strange that persons should be found who have the conscience to condemn them so strongly (as one of the debaters did at the meeting referred to), and to say that backing is not in the least necessary, and further that the idea was just simply a dodge to get money out of photographers.

I was present at the debate (the first, I believe, of its kind in England), and listened with great interest to the debater who slanged backed plates so unmercifully. At the end of the meeting, however, the opponent to backed plates had to acknowledge that public opinion was against him, and that after hearing the remarks made by really clever photographers whose work he admired and hoped to emulate, he would again use backed plates.

The debaters had evidently searched through all the photographic literature for the last half century for statements to support their arguments, and a few grains of wheat were to be picked from the immense amount of chaff. The opponent to backing commenced by quoting a sentence from Dr. Emerson's "Naturalistic Photography." viz. "This (halation) is a bugbear we have had little experience of, though we have taken many interiors. . . . If a large stop be used, and the exposure kept as short as possible, our experience is that no halation need occur." In the opinion of the speaker, backed plates were unnecessary if one chose the proper lighting for the subject to be photographed, took particular care not to over-expose and afterward developed the plate with a modicum of common sense. Many of the most famous photographers of the past—notably Robinson and Henderson—were quoted as being able to get the best of negatives on unbacked plates, and in support of the argument that halation could be obtained on backed plates, many horrible examples were exhibited, an attempt was also made to prove that halation decreased the speed of a plate, but without success. The discussion which followed the two points of view served to bring out several important and perhaps little known points regarding the faulty and halated negatives shown, and said to be on backed plates, points which may be overlooked by workers who use home-made backings and then use cuss words if halation does appear, and proceed to condemn backings, one and all, irrespective of their composition, color, or the method by which they are applied.

It is now fairly well known that backings in order to be effective must be in proper contact with the glass side of the plate. Backings, or more correctly speaking, halation preventatives, were not always placed at the back of the plate. The early backings of fifty years ago were at the back, and it may

be interesting to record the fact that the word halation was first used in the year 1861 (April 2), when a Mr. Marlow read a paper on the subject before the London Photographic Society. About the year 1891, however, experimenters tried putting backing or its equivalent under the actual sensitive film, *i. e.*, between it and the glass plate. It was well known that halation was caused by the light rays going through the sensitive emulsion, then through the glass, through which they came back again and caused halation or blurred outlines. Some workers, therefore, asked why the light rays should be allowed to go through the glass at all, and efforts were made to obstruct or absorb the light before it went through the glass. The early workers on these lines were not so successful as they expected they would be, but later their methods were improved upon, with the result that some plate-makers, notably French and German, now make non-halation plates by treating the film in some way or by placing something beneath it. The drawback to them, in my opinion, in that this "something," a stain, by the way, is a very great nuisance to clear away. After all, the glass side, or the back of the plate is, in the opinion of the majority of practical workers, the best and most convenient place on which to place the backing composition.

Home-made backings are, as a rule, very messy and dirty concoctions, and are not to be compared with the many —secret, so far—excellent preparations used by the bulk of the plate-makers. One of the latest backings is quite transparent and does not interfere in any way with the judging of density while developing. It also completely dissolves away in the developer, as do many other commercial backings, thus doing away with the necessity of clearing off the backing either before or after development, always a troublesome job. Formulæ for home-made backings have undergone little or no revision since their introduction about half a century ago, and it is to be hoped that kindhearted scientists or wealthy amateurs will turn their attention to the making of better and more cleanly backing mixtures than we practical workers are accustomed to get when making them up at home from hoary-headed and bewhiskered formulæ.

A great deal depends upon the composition of backings and the method of application. Only a very few years ago the pasting of red or black paper on the glass side of the plate was widely advocated, and adhesive papers were marketed for the purpose. Even Dr. Emerson, in his book already referred to, recommends the squeegeeing of dark paper (red or black) in contact with the glass, glycerin being used as the adhesive. The advantage of such a method is that the backing paper may be easily stripped off before development; but the disadvantage is that such a backing does not prevent halation so completely as one would wish. Obviously some backings are more effective than others, and the opponent to backed plates, in the debate referred to, used the lazy man's backings, which are backings in name only. Some time ago nine systems of backing were carefully compared, the subject photographed being a very severe one, which could not be taken on an unbacked plate without halation showing. The list is given below with the results (in parentheses): (1) Black and orange papers with water (bad); (2) black and orange papers with glycerin (not so bad); (3) asphaltum with benzole (bad); (4) caramel with water (very slight halation); (5) burnt sienna and water (very slight); (6) boot

blacking (bad); (7) black and red jams (slight); (8) lampblack mixed with Canada balsam and turpentine (no halation); (9) caramel, gum, and burnt sienna or lampblack (no halation).

One of the earliest backing mixtures, and one very often recommended by writers of today, is a mixture of asphaltum in benzole or chloroform; it being fairly easy to mix, apply, and clean off. Such a backing, however, is not so satisfactory as many imagine. When applied to glass the asphaltum converts the plate into a kind of black mirror which reflects some of the stronger light rays instead of absorbing them, and halation often appears. The defect was pointed out before the days of dry plates and at a time when wet plate workers were searching for the best backing, and yet the asphaltum backing is still being recommended by some writers who do not happen to be practical workers. The defective mixture has, in fact, been revived quite recently, because of the great need today of a blackish backing for use with panchromatic and other color-sensitive plates.

The majority of home-made backing mixtures are red or reddish brown in color, and while such colors are effective enough when properly applied to ordinary plates, they are practically useless for isochromatic and panchromatic plates, because of the sensitiveness of these plates to all the colors of the spectrum. The increased use of color-sensitive plates has served to turn the attention of operators to blackish backings, and the warning about the asphaltum backings, to which many will fly, should be taken particular note of.

Authorities who have paid particular attention to home-made backings, and operators who have made it their business to use them, are convinced that caramel is the most satisfactory base to employ. A suitable caramel mixture may then be colored brown or black, according to the type of plate used. A black mixture will, of course, be safe for all plates, but black mixtures are more messy and troublesome than brown mixtures, and many will prefer brown to black when ordinary plates are used. In my humble opinion which, by the way, was endorsed by the majority of those present at the debate referred to, the following mixture, which owes its origin to Mr. J. S. Teape, is by far the most reliable:

| | |
|---|---|
| Caramel . . . . . | 1½ ounces |
| Gum tragacanth (saturated solution) . . . . | 1 ounce |
| Burnt sienna . . . . | 2 ounces |
| Wood alcohol . . . . | 2 ounces |

The spirit is added after the other ingredients have been well mixed. The mixture is applied with a sponge and dries very quickly. This backing is for ordinary plates, but it is not black enough for the more color-sensitive isochromatic and panchromatic plates; it, however, serves as a base. It may be colored to a suitable black by using less burnt sienna and substituting lampblack or Indian ink.

The essential points of an effective backing are its color and its optical contact with the glass. The color must be non-actinic, and optical contact means that the light must pass from the glass to the backing without undergoing reflection or refraction, the two surfaces being in absolute contact. If the surfaces are not in optical contact—as, for example, red or black paper attached to the plate by means of water—halation may be slightly reduced but certainly not entirely eliminated.

## WORKING IN BACKGROUNDS

BY F. S. SMEDLEY.

[In submitting the following practical and helpful note, Mr. Smedley, an old friend and subscriber of many years' standing, writes: "I get so many good things from others that I like to pay back once in a while." A truly commendable spirit that if more often followed would help to make the magazine more helpful and interesting.—Ed. W. P. M.]

Mix a lot of old 8 x 10 and 5 x 7 negatives, cleaned, with some emery flour, water, tin box-cover, elbow grease, and a rainy day, in such a way as to result in a lot of 8 x 10 and 5 x 7 ground glass, which keep as stock.

In place of "working in" a background on ground-glass varnish, with spring clips hold the face of your 5 x 7 negative to the back of an 8 x 10 ground glass, keeping its edges some little way from the edges of the ground glass. Now on the retouching frame, work up with pencils on this ground-glass your background, putting in deeper shadows with vaseline on ball of finger. To print, adjust back of negative to face of ground glass in 8 x 10 frame. Such a background can be kept for use with other similar negatives, and modified in a few minutes to fit each. To print down white draperies, lay ground glass face out in frame. Put negative on this. With vaseline on ball of finger, work over the drapery. In desperate cases use this together with ground-glass varnish treatment on back of negative. You can also modify backgrounds with pencil and vaseline in the same way.

## METHODS AND FORMULÆ.

To include one's self in a group is quite an easy affair, and needs nothing in the way of special apparatus that cannot be fixed up in a very few minutes. The writer wished to do this, and accomplished it quite successfully. The lens was fitted with a little cardboard cap, which in this case consisted of the lid of a pill box, blacked inside. It must be so loose a fit as merely to hang on the front of the lens, and should have a fine black silk thread attached to it, the slightest pull on which will bring the cap tumbling off the lens without shaking the camera. So much for starting the exposure. To cap the lens is equally easy. The focussing cloth is arranged on the top of the camera so that it will hang down right over the lens; a book may be placed on top of it to keep it in position, and then the hanging part is thrown lightly back over the book. A silk thread is attached to this also. When the exposure is complete, this second thread is pulled and the focussing cloth falls down over the lens and covers it up quite well enough to allow the photographer to leave the group and cap it in the usual way. The threads may be taken direct to the group, as they will not show in the finished picture, so long as they are black and are not too coarse.

By The Elliotts, Austin, Texas

*Winners of Inter-State Prize, Oklahoma Convention, 1911*

By The Elliotts, Austin, Texas

*Winners of Inter-State Prize, Oklahoma Convention*, 1911

By A. Krauth
Frankfort on Main

By A. Krauth
Frankfort on Main

By A. Krauth
Frankfort on Main

By Welfausstellung
Brussels

By Heinr, Jr.
Frankfort on Main

By Ostermayr
Munich

By Maiond Tarsa
Budapest

By Gebr Lukel
Munich

By Elfriede Reichelf
Bresiau

By Wilhelm Kunze
Fiume

By Rudolph Lichtenberg
Osnabruck

By Schlasser und Wenisch
Prague

1. The Buffoon
2. Philip IV
3. Æsop
4. Portrait of a Lady

*Illustrating Sidney Allan's Article*

5. Philip IV

6 Philip IV

7. Princess Margaret

8. Princess Margaret

*Illustrating Sidney Allan's Article*

9. Sculptor Martinez
10. Portrait of an Old Man
11. Portrait of a Lady
12. Queen Mariana of Austria

*Illustrating Sidney Allan's Article*

# MASTERS IN PORTRAITURE—DIEGO VELASQUEZ

BY SIDNEY ALLAN

THE art museum of the Prado, Madrid, is considered by the modern art student to be of more importance than the Louvre or the Holland galleries. This is due largely to the number of Velasquezes and Goyas it contains. The Spanish School exercises a deeper influence upon contemporary portraiture than any other.

Velasquez with Rembrandt will probably for all time share the reputation of having been, if not the first, the two greatest portrait painters of the world. If we look at a Velasquez portrait in an unprejudiced way, we are astonished at the awkwardness of his figures, and yet they fascinate us, and we must give in that they are strikingly realistic. They make the impression of truth, of unadulterated facts. It was a time when costume, particularly the court costume, was unusually stiff and cumbersome. It was not pliable and flowing, as during the English School, and Velasquez painted it as it was, with sharp-angled outlines and a confusion of details. But he possessed the rare gift of subduing the elaborate embroideries into large planes, and in that way saved the artistic unity of his composition.

The artist of the day considers Velasquez quite up to date. In his eyes he is *modern*. How can this be explained? Velasquez, who was as true to his time as any painter, who was a medieval courtier of the most unyielding type, and whose canvases are the best records we have of the court of Philip IV. The reason is that our portrait painters have rediscovered him. They derive a certain amount of inspiration from him, and repeat in their compositions what he taught more than two hundred and fifty years ago.

Look at Fig. 1. Does it not remind you of the sharp outlines of Monat, and has the pose not a striking resemblance to Whistler's Philip II? Such things are permissible in art, and they explain the present popularity of Velasquez's art.

Velasquez as a portrait painter had not a great range of motifs. One can reduce it to four favorite subjects —the numerous portraits of Philip IV, full-length male figures, the little princesses in hoop petticoats, and simple bust and three-quarter portraits of dignified personalities of the Spanish court. Their principal charm lies in the directness of expression and the skilful manipulation of dark planes.

"The Buffoon" (Fig. 1) is remarkable for the way in which the figure is placed. It is perfectly distinct and against a light background. Who today would dare to do such a thing? To show two stockinged legs and an arm sticking out on one side in an angular fashion! The pose looks absolutely natural, almost too natural to be beautiful, but it no doubt needed infinite care, forethought, and numerous corrections to make it look so natural without offending the eye. This picture had a very strong influence on modern art. To put a figure in empty space and to make it look as if surrounded by atmosphere has been one of the great ambitions of the modern portrait painter. Velasquez did not lay special stress upon this

quality, but be helped to originate the idea.

"Æsop" (Fig. 3) has to some extent the same characteristics as Fig. 2. It is also a silhouette, but against a graded background. It is an imaginary figure, as archæologically inaccurate as can possibly be imagined. Truly, this can not be Æsop, the Greek writer of fables! You are right, it could be just as well anybody else. It is simply a character study, and Velasquez, like most painters of his time, dressed up his historical or legendary personages in contemporary costume. In this instance it seems to be a sort of overcoat or dressing gown. The "hang" and flow of drapery are superbly managed.

Extremely unconventional also is Fig. 2. Here we have once more the silhouette idea, modified by the dark trunk and foliage of the tree. The pose is a natural one, and the principal charm of the figure consists in the simple treatment of planes. All rather dark, they show sufficient differentiation of texture, and are divided by frankly drawn and pleasing lines.

The other two portraits of Philip IV are not quite as satisfactory. Fig. 6 does not make a good silhouette, and is too profuse in detail. It seems to be more the record of a new costume than of the man. Fig. 5, no doubt, is a good likeness. It seems to have been made for the sole purpose of reproducing the *structure* of the face. Its treatment is almost too simple. The many straight lines of the collar, shoulders, and chains make it look almost as rigid as the Stratford bust of Shakespeare. Fig. 10, also very much like Fig. 5 in composition, is finer, as the lines are more curved and less conspicuous.

The portrait of sculptor Martinez, Fig. 9, lacks virility. It is too much posed, but we must admire in all these pictures (notably Figs. 5, 9, and 10) the frugality of technical means and the clever management of large planes. Nothing unnecessary is admitted. Everything is forged together into a few dark shapes, and only the face, collar, and hands are seen in full light and display the necessary contrasts.

Unique in their way are the portraits of Princess Margaret (Figs 7 and 8). It surely took considerable artistic courage to put these unwieldy and doll-like shapes upon a canvas. And yet one can hardly say that they lack grace. It is a peculiar kind of grace, but grace after all, and for no other reason than through their truthfulness to nature. Velasquez had to paint them, and so he simply painted them in his usual broad manner. There was no use of embellishing the gown, it was elaborate enough, and in a way the main task, and so the painter sat down, made the best of the situation, and painted a delightful still life. Gowns have rarely been painted with such loving care and such keen observation of values as in these instances. The different portraits of Princess Margaret—and there are many—all show the figure in the same position, only differently placed, sometimes with very little, and sometimes with a lot of space above the head, in most cases showing the entire figure to the undulating rim of the skirt, while in some the lower margin cuts into the gown. The different effects produced thereby are worth studying.

That Velasquez did not shrink back from any folly of fashion we see in Fig. 12. The headgear is pictorially almost impossible, and yet the painter made something out of it. And every portraitist could and should do the same, for the vocation of the true portraitist is primarily to be a recorder of facts. He may find fault with the facts, but it is his duty to record them as beautifully as he knows how.

Fig. 4 is an interesting composition within a narrow upright. The parallel lines of the black trimming, the black mantilla, and white fichu produce a delightful sensation of contrast. The silhouette is ordinary, but exceedingly well placed.

In Fig. 11 we have one more opportunity to admire Velasquez's skill in the management of outlines. Apparently he was not afraid of even the most unusual shapes or combinations of lines. The peculiar line formed by the mantle and skirt under the uplifted arm is a most unconventional performance, and it is even repeated by the leaf-like effect of the collar. It is as curious as the line of the mantle to the left in Fig. 1, and plainly proves that an artist who understands his art does not need to be so particular about traditional laws of beauty. He can make his own laws, and if they are practical and convincing, they are sure to be accepted by future generations as new standards of beauty.

## CROOKE OF EDINBURGH

THE following appreciation of Mr. William Crooke, one of Scotland's foremost photographers, is from the pen of "Touchstone," in *The Amateur Photographer and Photographic News*. It is doubly interesting in view of Mr. Crooke's recent visit to this country:

Most books have a sub-title, so have many men—when they reach a certain eminence. The sub-title of a book is indicative of the nature of the work, and is frequently a cause of much cogitation to the author; on some occasions, however, it is so evident that it comes without any exertion. The latter must be the case with the subject of our remarks; he is the aristocrat, or, to be more exact, he depicts the aristocrat in photographic portraiture. It seems almost natural, then, to call him the Gainsborough of photography, as it is to call Edinburgh the Athens of the North.

No matter what his subject—ladies, gentlemen, or children—that portrait is always represented with a certain amount—and an amount just befitting the subject—of majesty; yes, I think majesty is the correct word. One may wonder how such an attribute can be indicated in child portraiture, but that it can is evident from a study of one of Crooke's child portraits. In his portraits of judges, and he is responsible for a magnificent series of these, we have the majesty of the law represented as we have it nowhere else. In his portraiture of ladies there is an aristocratic daintiness, a semblance of the majesty of beauty, if I may so term it, that indubitably stamps the authorship of the work. In his work we have an example of a profession followed with an artistic devotion that raises at once the ambition of the worker, and admiration of the artist.

As to the inherent artistry of the man, we had evidence in his one-man show at the R. P. S. in the days when that body allocated a portion of their space at their annual exhibition to the profession. Crooke's exhibit was always something to ponder over. Not only did it contain good work, but the work was arranged in a way that made the most of the individual items. The pictures were good, but they were displayed in a setting that enhanced, if that were possible, the pictorial value.

If that were possible, did I say? Why question it? That it was possible was evidenced by contrast with some of the other displays seen on the same walls. Crooke's exhibit made the professional section.

What about the man himself? Well, he is a delightful composite of many parts. There is a *soupcon* of the artist proud of his powers and confident of his judgment; but there is another side, the hail-fellow-well-met that we saw during his presidency of the Convention that year at Gloucester. Look at his never-failing endeavors to make everyone feel at home; look at his up-to-date idea of employing the kinematograph to register the portraits of those present. He was the genial president all the time, and no one did more to make that delightful outing a success; many of us old Conventioners recall with pride our association with William Crooke during that eventful week among the magnificent architecture of the district.

He is an Irishman domiciled in Scotland, and unites many of the best qualities of both races; the perseverance of the Scot is allied to the cheery optimism of "the ould countrie," producing an—ach! what better description can we give them?—producing Crooke.

Impressions of his recent trip to America, recounted at one of his only too rare visits to London, showed him to be a man of keen observation. I have no doubt he left as many friends behind him in the States as he left after those trips to town to hang his pictures at the R. P. S. shows at the New Gallery.

At the R. P. S. his portrait studies are no less popular than they are at the Salon of the home of his adoption; and I remember reading with pleasure his speech at the opening of one of the Salons—was it at Dundee last year?—where his whole-hearted praise for the work of the Scottish Federation was a delightful tribute from one of the masters to a national body earnest in its endeavors for the betterment of photography.

The profession cannot have too many men of the caliber of Crooke, of Edinburgh, and "Touchstone" hopes that he may long be spared to grace the profession he adorns.

## STARTING IN BUSINESS

We are constantly receiving inquiries from amateur photographers desirous of blossoming out into professionals, as well as from guardians in search of a career for their charges. Both ask as to the prospects of success in starting a photographic business, the general tone of the writers being so optimistic that we hardly like to dampen their enthusiasm by advising them to try some other walk in life unless their artistic abilities or opportunities for securing business are quite exceptional.

There are many amateurs who have attained a certain degree of proficiency in photographic manipulations of the ordinary sort, who feel that if they can take successful photographs of their friends and their friends' houses they have only to put a brass plate on their doors or showcases in their forecourts to insure a succession of remunerative sitters. This, we need hardly say, is a delusion of a particularly disappointing kind, for the embryo photographer waits for the sitters who do not come,

the friends who have promised him their support, and even the "invitation" sitters through whom he hoped to obtain introductions, until, a "sadder and wiser man," he either gives up in disgust, or, having learned that business methods are more useful than artistic ability, does as any other tradesman would, and goes in search of customers. A photographer who afterward conducted a very successful business told us that at the age of twenty he started in business for himself with the promises of half Liverpool as sitters. He had been popular in another profession, and thought that he had a ready-made connection. In twelve months he had to close down; but, like a wise man, he would not acknowledge defeat. Entering a good studio as an assistant, in a few years he had learned the ropes, and a second venture proved entirely successful. He said with much feeling that the promises of friends had induced him to take a false step, loading himself with debts which he should never have incurred otherwise.

Away from the largest centres of population, the photographer must be able to undertake every class of work, often under difficult and disagreeable circumstances, if any amount of business is to be done, and it is for this reason that some sort of apprenticeship or practical training is absolutely necessary. For this reason, too, the competition prize-winner finds himself hopelessly outclassed. Such an experience is also invaluable should he desire to purchase an existing business, as he is then able to go behind the specious representations of the owner or his agent, and form a true estimate of the value of what is offered to him. As showing the necessity for such knowledge, we may instance a business for which several hundreds were asked, which was making large returns, but only yielded a clear profit of about thirty shillings weekly, without allowing anything for the continuous labor of the proprietor and his wife. Very often, too, a large sum is asked for an accumulation of obsolete and inconvenient apparatus, furniture, and accessories, which will never be anything but lumber to the purchaser, but which make a brave show in an inventory. The oft-quoted advice of Polonius to Laertes is especially applicable to the fitting out of a photographic establishment:

> "Costly thy habit as thy purse can buy,
> But not expressed in fancy; rich, not gaudy,
> For the apparel oft proclaims the man."

Applying this counsel impersonally, we shall follow the practice of the most successful in our profession, and endeavor to make our premises in every way worthy of as good a class of customers as our location warrants us in expecting, and it is for this reason that we recommend the beginner to fit out his own premises in his own style, rather than to take over the worn and faded accumulations of an established business, even at a bargain price. We have examples of this policy in the establishments of Messrs. Speaight and Mr. Turner, on the one hand, and in many of the "American" type of studios on the other. Both the classes and the masses are attracted to a studio which has the appearance of being alive and up to date.

When only a limited sum can be devoted to starting or taking over a business, it is unwise to spend nearly all on studio appliances or fittings. The reception room and show window have equal, or even prior, claims, for they are seen by the prospective sitter before the studio is entered. The stationery used should also be of good quality, a point which, we regret to say, is overlooked by many of our correspondents,

and judicious use should be made of business-drawing booklets. Nowadays the grocer, the dairyman, and the draper periodically circulate artistic little brochures, but photographers may do so with more chances of profit. The question of the personal element has been dealt with by many writers and speakers, so that we need not say more than that in photography it is a very important factor, the sitter to a great extent reflecting the mood of the photographer. "As iron sharpeneth iron, so is a man's countenance brightened by the face of his friend." It should be the aim of every photographer to make each sitter, no matter how exasperating, feel that for the time being he is in friendly surroundings.—*British Journal of Photography.*

## OUTDOOR PHOTOGRAPHY AT NIGHT

No country dweller who has walked out on a dark night carrying a lantern, or who has ridden in a motor car with strong head lamps, can have failed to notice the eerieness of the effects glimpsed by these artificial lights. Trees, bushes, cottages, hedgerow flowers, loom suddenly out from the blackness, in a curious ghostly fashion, unnaturally white against the depths of darkness behind them. Their appearance is almost entirely different, seen thus, from what it is when seen in sunshine; and the chief reason is that they lack background. Color, also, is generally lost, or at most only hinted at.

Now, in outdoor photography in the country, and especially the photography of "bits" such as a tree or so, or a group of tall flowering plants, the chief difficulty is the background. There is always too much background; or, at any rate, it is too spotty. Plenty of naturalists carry a screen background with them when photographing high-growing flowers, and place it behind the flowers to make them stand out clearly. To take flowers in their natural surroundings is indeed far more a matter of getting a good background, against which the flowers will "tell," than getting a good specimen of the flowers themselves.

But when you look at an upstanding bush of flowers by lantern light on a dark night, you see that the night itself provides the background—a black background, yet with no resemblance to a mere portable sheet hung on rollers. And if you go into a wood with your lantern you find that all sorts of graceful tree-trunks close to the path have assumed a strange prominence in the lantern light, purely because you cannot see the forest of similar trunks in the gloom behind them.

Noticing these facts, I have endeavored lately to make use of them photographically, and although the pictures which I have produced are imperfect and experimental, they have a good deal of interest for the amateur in search of novelty, and more especially for him whose aim is to achieve the decorative without too slavish a clinging to truth as seen by the human eye.

Trees can be taken in a position which would be quite impracticable in daylight; for in daylight a tree would not stand out at all pleasingly against the muddle of other trees and hedges and sky-patches behind it. This means, obviously, that one's field of labors is vastly increased by the addition of night-time photography, for all sorts of subjects which are altogether too niggling by day may be made to appear

quite salient and refined by night, thanks to night's simplification.

My exposures have all been made by flashlight—Agfa flash powder used in an Agfa flashlamp held in the hand. At F/8, with an Imperial special sensitive ortho plate and a fairly close-up subject, I find that a gram of this powder, fired close behind the camera, suffices. Over-exposure is clearly not probable in any circumstances, but by using too bright a flash we get a clogged up quality in the near details, which develop up too densely in the negative, and we do not gain much compensating advantage in increase of background details. Indeed, in any suitable subject, one does not want the light to "carry" too far; what one wants is that the object being photographed shall be illuminated, and little or nothing beyond it. It is precisely the fact that the object emerges from a kind of cave of unlit blankness which goes to make the charm of this style of work.

The objects taken by flashlight at night should always have a space of atmosphere behind them, and preferably some sky, which, by its blackness, gives a sense of profundity and helps the total effect. I have photographed, for instance, fruit blossoms on a cottage wall, and got, by flashlight, a picture which might just as well have been taken in sunshine, for the wall to which the blossoms clung was as well lit as the blossoms themselves.

Blossoms hanging from a tree which stood by itself came out splendidly, contrariwise, for they had depth behind in which nothing caught the light.

Nevertheless, one can imagine some cases in which it might be worth while to take subjects of this nature at night, even though the results resembled sunshine pictures—either the weather during the day might be too wet or windy for photography, or the photographer might be too occupied during the day to do any camera work. At night, after rain and wind, the weather often quiets down, and one may do some photography, by flashlight, of subjects which would otherwise have had to be neglected. It is worth noting, however, that the flash of flash powder is instantaneous, so that we can photograph flowers, foliage, etc., in a breeze, and unless the movement is excessive it will not show in the negative.

Focusing is, of course, not so easy as by daylight. Much the best plan is to bring an assistant, who carries a candle or lamp. This light—a small flame is best—is held by the assistant and is placed by him first at the bottom of the subject to be photographed—*e.g.*, at the foot of the tree trunk, in a tree subject. The photographer looks at his ground-glass screen, and if the flame is visible on it he knows that the foot of the tree is included. The assistant then holds up the lamp to the highest point of the subject; then to the right margin and to the left; and the photographer, watching his ground glass, can see that all is properly included. Finally, the assistant holds the lamp at about the centre of the subject, and against it, and the photographer gets his focus by sharpening up the flame visible on the screen. The exposure is then made.

It is highly important that the powder should be fired a trifle farther back than the front of the lens, or a reflection of the glare will get in and cause a flare mark. If the powder is fired a little to one side of the line of the camera's sight there will be deep, and, on the whole, generally unsightly, shadows in the picture.

My own experience has led me to hold that the light should be shining, in nine cases out of ten, dead on the subject, when plain decorative effects

are desired. Perhaps the best position from which to fire the powder is immediately above the camera.

After having wound up the detonator of the lamp, and having aimed it and got a finger on the trigger, the eyes should be closed before firing the charge, for the glare is dazzling. One should see, also, that in firing powder it is well clear of any overhanging branch or other object which might catch fire or be damaged. If the moon is in the sky, it is well to make sure that it is not shining into the lens, or there may be some flare; but, except for this precaution, moonlight nights are preferable to pitch-dark ones, for the sake of saving needless stumblings and fumblings and accidents through lack of light.

It is to be noted, finally, that countless subjects which are quite absurd by day make excellent night themes. Subjects can, of course, be sought out beforehand, by daylight, but it will be found that only after some experience and practice can their night aspect, as evoked by flashlight, be gauged in advance.—WARD MUIR in *Photography and Focus*.

## SOME QUESTIONS OF LAW OF INTEREST TO PHOTOGRAPHIC PRACTITIONERS*

BY FREDERICK C. HANDY

THERE are a number of interesting questions of law relative to the respective rights of photographers and their customers in and to photographs and negatives, or plates, and their uses, which every photographer should know about. I will endeavor, in as brief a manner as possible, to enumerate and to explain them so that the layman, or uninitiated, may understand them. Here are some of the most interesting questions: First, the property right in the photo negative as between the photographer and the customer—(*a*) in the negative made for a *paid* sitting, and (*b*) in the negative made from an invitation sitting.

Second, the right of the photographer to copyright prints from negatives made of subjects (*a*) who have paid or agree to pay for their sittings, and (*b*) those who have been invited for a sitting. These questions themselves raise other interesting ones, some of which I will touch upon. As to the first question (*a*), a review of various court decisions, to say nothing of custom, shows that the photographer is the owner of the negative no matter whether the sitting is paid for or not (Corliss *vs.* Walker, 64 Federal Reporter, 280, U. S. Circuit Court of Appeals, District of Massachusetts), but when the sitting is paid for there is an implied contract between a photographer and his customer that the negative for which the customer sits shall only be used for the printing of such photographs as the customer may order or authorize to be printed (Moore *vs.* Rugg, 44 Minnesota, 141; Levyeau *vs.* Clements, 175 Massachusetts, 376; 50 Lawyers' Reports, annotated, 397 and notes; Corliss *vs.* Walker, 64 Federal Reporter, 280; and Klug *vs.* Sheriffs, 7 Lawyers' Reports, annotated, N. S., 362). The right of a photog-

*Reprinted from the Association Annual of 1911.

rapher to use a negative or print therefrom, in cases where the sitting is by invitation, complimentary, depends largely upon the circumstances of each particular sitting, upon the nature of the agreement at the time of the invitation sitting, also as to whether or not the person photographed is a public character.

In Press Club *vs.* Falk, 59 Federal Reporter, 324, decided by the Circuit Court Southern District of New York, January 12, 1894, it was held that "one who photographs an actress in her public character, *free of charge*, with the understanding that she is to have as many photographs as she wants, is the absolute owner of the photograph and negative and for his exclusive benefit."

I do not think there can be any doubt about the *right* of a photographer to *copyright* photographs taken by him, whether the sitting is paid for or by invitation, and base this opinion upon the decision of the United States Supreme Court in the case of Lithographic Co. *vs.* Sarony, 111 U. S. Rep., 53, 4th Sup. Court Rep., 279. In the case of Falk *vs.* City Item Printing Co., 79 Fed. Rep., 321, Circuit Court E. D. La., and in many other cases, it has been held that photographs showing the existence of originality, thought, intellectual production and conception, entitle the photographer to a copyright. The right, however, to copyright does not, in case of paid sittings, entitle the photographer to the use of the negative without the consent of the customer, excepting where the customer is a public character. In the cases of Pollard *vs.* Photographic Co., 40 Ch. Div., 345, and Moore *vs.* Rugg, 44 Minnesota, 28, it was held that a photographer taking a photo of a public character is the author and proprietor of the photograph and may perfect his exclusive right to it by copyright (citing several cases, notably the Sarony case).

The right of privacy question has been discussed in innumerable court decisions. In the Corliss case, 64 Fed. Rep., 280, already referred to, the Justice rendering the opinion, says: "I believe the law to be that a private individual has the right to be protected in the representation of his portrait in any form; that this is a property right; that it belongs to the same class of rights which forbids the reproduction of a private manuscript, painting, or the publication of private letters, etc. While the right of a private individual to prohibit the reproduction of his picture or photograph should be recognized and enforced, this right may be surrendered or dedicated to the public by the act of the individual, just the same as a private manuscript, book, or painting becomes (when not protected by copyright) public property by the act of publication. The distinction in the case of a photograph seems to lie between public and private characters. A private individual should be protected against the publication of any photo of himself, but where an individual becomes a public character the case is different; a statesman, an author, artist, etc., who asks for or desires public recognition, may be said to have surrendered this right to the public. When anyone obtains a picture or photo of such a person, and there is no breach of contract or violation of confidence in the method by which it was *obtained*, he has the right to reproduce it, whether in a newspaper, book, or magazine." The use of one's photo in a news item may fairly be said to be for a public purpose, and the only restraint upon such use is that the news must not be untruthful. A very interesting and extensive discussion of the right of privacy may be found in the opinion of the court in

the case of Henry *vs.* Cherry, decided June 22, 1909, by the Rhode Island Supreme Court, and reported in 24 Lawyers' Reports, annotated (new series), 991. This case is well worth the reading. This doctrine of right of privacy was never adopted or approved by a court of last resort, that is, the highest court of the jurisdiction in which the question may have arisen, before the year 1905, when in the case of Pavesic *vs.* New England Life Insurance Co., 122 Georgia, 190, 69 L. R. A., 101, it was held that the invasion of a person's right of privacy is actionable regardless of special damages to person, property, or character. This decision was based upon certain provisions of the Georgia Civil Code, 1895, Section 3807. The first case involving the existence of the right of privacy to be passed upon, *but denied*, by a court of last resort was the case of Roberson *vs.* Rochester Folding Box Co., 171 N. Y., 538, decided by the New York Court of Appeals in 1902, opinion by Justice Alton B. Parker. Since Justice Parker rendered the opinion of the court in this case the Legislature of New York has enacted Chapter 132, page 308, of the Laws of New York, of 1903, entitled "An Act to Prevent the Unauthorized Use of the Name or Picture of any Person for the Purposes of Trade,"* which went into effect September 1, 1903, whereby persons offending against its provisions are not only declared to be guilty of a misdemeanor, but also are made liable in civil actions at the suit of persons injured by such unauthorized use of name or picture, to answer in damages, including exemplary damages, for such injury. The constitutionality of this statute has been sustained by the Court of Appeals of New York in the case of Rhodes *vs.* Sperry & Hutchinson Co. (1908), 193 N. Y., 223, 85 N. E. Reporter, 1097. On May 1, 1911, the Supreme Court of the United States also sustained the constitutionality of this statute (the Rhodes cases having reached that court). After listening to arguments against the statute, Chief Justice White informed the attorneys that were about to defend it that it was not necessary.

* This law was amended early in June, 1911, to allow photographers to exhibit in or about their establishments specimens of their work, unless written notice objecting to such exhibition is received from the person portrayed.

## DISCRETION

OBSERVATION and discretion are two requisites that a photographer should possess in a marked degree. Some do possess it, while others are lacking. But, as these things can be cultivated, there is no reason why more attention should not be given to them, especially to discretion. A good workman will see the faults in the technical quality of a negative and will know how to correct them. Pin holes and water marks will obtrude themselves until they are the main features in the negative. Of course these will be worked out before the pictures are made and delivered, but their presence means more work and time, and in consequence greater cost for the work. The lower the cost and the higher the price the greater the profit, so any means that will reduce the cost of production will increase the profit. Many can readily see the more apparent faults in a plate, yet do not observe the minor ones. They are lacking in observation. Poor powers of observation are a species of careless-

ness, or, rather, a condition brought on by carelessness. It is not something that is born in the man; it is something that can be cultivated and brought up to a high point of efficiency. The story is well known of the man who wanted to develop the powers of observation in his children, so he would take them by a store window and when they had looked at it and passed on he would offer a present to the one who could tell the greatest number of things that were in the window. The prizes were so sought after that in order to be always ready they formed the habit of observing everything closely and the accuracy with which they could describe what they had seen made them famous, for they could see more than even their elders, and often would put to shame people who prided themselves on how much they observed.

When photographers fail it is the natural desire to study out the reasons why they fail, and in the light of the number of members of the fraternity who have been crippled by the present period of business depression, we are prompted to compare those who have lost money during the past year and those who have continued to make money, for there are some who have had a prosperous year, even though not up to the standard of former ones. Some have been responsible for the falling off of trade while others are the victims of their own lack of discretion. One photographic stock dealer makes the asesrtion that the customers who have continued to discount their bills during the past year are the ones who have always done it in former years and are just as well prepared to meet obligations now as they ever were. We would not put it that strong, but we do believe that there is some truth in it. The result of a very critical observation of the photographers and other business men who have suffered most in this little panic is that a large part of the trouble has been caused by a deplorable lack of discretion. This has acted in different ways. Some became reckless when the business was easy to get, and they spread themselves out over too much ground and were easily cramped when money became tight. Others had bolstered their business up with catch penny schemes that will work when people have money but which they will have none of when they are short of funds. Others have followed a false lead and have been catering to the wrong kind of trade with the wrong kind of work.

It takes all kind of people to make the world, and no doubt there will be people to come who will make the same kind of mistakes that others have made before them and nothing will teach them that they are doing wrong but the experience of finding themselves tied up by a panic every six or seven years and having to begin all over again. Everyone has to get their experience, and every panic finds thousands of victims, but while there is no particular disgrace in getting caught in a panic, there is a great deal of disgrace in getting caught by the next one. As the old saying very aptly puts it, "Anyone is liable to get bit by a dog, but only a fool will get bit twice by the same dog in the same place." It is up to every one who has been "bitten" to observe the causes and reasons and to use discretion to the end that he may never get caught again.

The selection of the patronage is of prime importance. By this we mean that the photographer should feel out each customer and find out the kind of work that he or she prefers, and then get as close to that as is possible. It is all very well to turn out the kind of work that some other photographer does and to try fancy lightings and

different finishes. It is wise to know all about these things, but the greatest discretion must be exercised in the use of them. To get the best paying trade do the kind of work that appeals to the great majority of the class of trade whose patronage you are seeking. Show more of the popular kind of work than any other and give the customers who have limited means the idea that when they come for a certain price work that they will be able to get it without bickering. But when the enthusiastic and more wealthy customer comes in, then is the time to change tactics and have a few cards up the sleeve wherewith to lure the order into the higher price grades. This is discretion.

Then, too, discretion must be used in the treatment of customers when they are deciding on the relative merits of the different proofs, and are about to place the order. People are all different—some are born to be led, and others are, or think themselves, born leaders.

The timid can be helped and advised in their decision, and will be more than likely to take the photgorapher's word for it as to which is the best negative. But there are customers who know their own minds, and to try to offer advice to such, is to arouse antagonism at once. It requires fine discretion to determine which customers may safely be advised, and which should be let strictly alone, but any shrewd operator should be able to size up the different types after a few minutes' work with them under the skylight.

But in the pose should be spent the greatest amount of discretion. Here, too, the personal equation is strong, for vanity and modesty are so closely mixed up that it will require a quick wit to discover just which trait is predominant. The lady who wants to be considered dignified and steady, does not want to be posed in a coy attitude any more than the giddy young school girl wants to look like a hard-worked, frowsy old woman.

And yet there are men and women who are frivolous and shallow who want to be considered deep and steady, while some others who are narrow and prosy wish to be considered wordly and dramatic.

If the operator can discern the desire of the sitter, and can give the effect that is desired, the popularity of the work is assured. It can be almost stated as an undisputed fact that everybody wants to be flattered, man or woman, but discretion must be used as to what will flatter them. If a young lawyer is posed and lighted so that he will appear as a strong character of much dignity and experience; if the slender man is made to look broad-shouldered and big; if the young matron is given the mature beauty of a well-poised social leader, this is flattery more subtle and effective than to depend on the retoucher to smooth out all wrinkles and add beauty of feature.

Observation and discretion will make the handling of customers easy. It will lighten the work. It will please more people. It will show better results. It will yield more profits. It will make more reputation. And it can be acquired with such a little thought and attention that it should be a life study for every photographer. Of course it means that "self" must be placed more or less in the background, and that the mind should be centered on the wants and tastes of others, and this is one reason why it seems so hard to a great many. They cannot get their minds off themselves. That is a great indiscretion.—*Trade News.*

# CONTACT PRINTING ON BROMIDE PAPER

BY W. ETHELBERT HENRY

It is well to bear in mind at the outset that bromide paper is extremely sensitive to light, almost as much so as is a rapid dry plate. For this reason, it is obvious that it must not be carelessly exposed to actinic light. All manipulations except the actual printing must be conducted by red or yellow light, such as is allowed to pass through glass of these colors.

For evenness of result, it is better to use a lantern than daylight, because the fluctuation in intensity of the latter is very misleading and liable to lead to failures through over- or under-development.

The actual color of the light, also, is of far more importance than one would suppose; ruby light tends to give one the impression that development is complete long before that is the actual case; it is also somewhat more difficult to handle the paper satisfactorily by this light than by a good yellow.

For these and other reasons I strongly recommend the use of yellow light, a thoroughly safe one being given by gas or lamplight passing through one sheet of yellow glass and one thickness of "canary medium."

This light, while being absolutely safe, gives such perfect illumination that it is as easy to control and estimate results as it would be by ordinary unfiltered gaslight.

If a ruby glazed lantern is already in use for negative work, it can readily be prepared for bromide printing by merely removing the ruby glass and substituting the yellow and canary medium. With these brief hints as to illumination, let us consider the entire process in its various stages.

*Unpacking the Paper.* The sensitive paper is generally packed in envelops sufficiently opaque to protect it from the admission of light. The packet must be opened in the dark-room from which *all* light (even stray streaks beneath the door) is excluded, excepting only that given by the yellow glazed lantern. The outer envelop being carefully undone, an inner cover will be found and these wrappers should be placed on a dry table while a sheet of the paper is removed.

It is a good plan to have a "light-tight" box (obtainable from any dealer) in which to put the paper after unpacking it; this prevents loss of time and awkwardness of handling in having to replace the paper in its wrappers each time a piece is withdrawn for use.

When several prints from one or more negatives are required, it is an excellent thing to have two of these boxes, one for the unexposed paper and one in which to put the prints as made until all are ready for development.

*The Class of Negative.* Bromide paper gives us a great command over results; in fact, so vast is the control we may exercise that it is possible to secure good results from almost all classes of negatives, from mere ghosts to those with density almost equal to that of a brick wall. But there is, of course, a class of negative that gives a good result with the least expenditure of skill, such a one is generally known as of average density, having a full scale of gradation with high-lights dense, yet not so opaque as to prevent you seeing a window clearly defined

when looking toward it *through* the densest parts of the film, such as the sky, for instance. Another way to test the density is to put the negative, film side down, on some large print on white paper, the large letters should be just visible through the sky, but the smaller print should not be readable.

That is the class of negative usually considered in instructions for use as an "average" negative.

*The Sensitive Side of the Paper.* A difficulty sometimes occurs in telling which is the sensitive side of the paper; this may be easily ascertained by the appearance of the edge, which turns slightly inward *toward* the sensitive side. This is quite apparent to the sense of touch as well as sight. Some people moisten their finger and thumb and squeeze the paper and see which sticks (the sensitive side), but that is a dirty method and quite unnecessary.

*Printing from the Negative.* Having unpacked the paper after making sure that all but the yellow (or ruby) light has been excluded from the room we are ready to print.

For this purpose, different workers favor different classes of light; one prefers gaslight, another swears by magnesium ribbon, and some even prefer the light of day.

Personally, I favor ordinary gaslight passed through a No. 5 Bray's burner, because it is quite rapid enough for all practical purposes and is perfectly under control and free from serious variation.

The burner should be within easy reach of the work table, and should be fitted with a byepass to obviate the necessity of continually striking matches. Several years ago I had my bromide printing rooms fitted with an excellent lantern of this class in which the byepass was connected to two jets (one inside and the other outside the lantern) in such a way as to turn down the white light with the same movement that raised the colored light, and *vice versa*. By this means no gas was wasted and the simple action of pulling or pushing a lever operated either light at will. By placing the same lever "amidships," both jets were lowered to the point of invisibility and could so remain for days at a time, yet always ready at a moment's notice.

If the dark-room is small, and space is an object, the sink may be fitted with a wooden cover and this may be used as a table for printing the paper, but care must be observed to avoid the slightest moisture upon it or satisfactory work is impossible and the negatives may be ruined. In a large room, it is much better to have an ordinary kitchen table removed some distance from the sink; with this and a comfortable chair bromide printing is a very pleasant occupation.

We unpack some bromide paper and put it in its box and then put a negative of "average" density in an ordinary printing frame. On the film side of the negative we must now place a sheet of bromide paper with its sensitive side in contact, replace the back of the frame and it is ready for exposure. Before exposing it, *make sure that both boxes are shut* or their contents will be ruined the moment the white light is turned up.

Upon reference to the instructions that accompany each packet of bromide paper, you will observe a certain number of seconds' exposure is advised at a certain distance from the light.

When all is ready for exposure place the printing frame upright opposite the lantern at the mark indicating eighteen inches, note the time on the seconds hand of the clock, and throw the lever over for white light

for four seconds and then reverse it. Remove the paper, and if many are likely to be required from that negative it would be well to develop the first print in order to judge as to the accuracy of the exposure. If over- or under-exposed, the time must be reduced or lengthened as required. When the best time and distance has been ascertained for a certain negative, mark it with a narrow strip of paper bearing full particulars for future guidance, such as: "4 sec., 18 in., No. 5 Bray;" in this way absolute correctness of future exposures is assured. Of course, if gas is not obtainable, magnesium ribbon may be used instead. In this case the negative would be marked "1 inch (or more) ribbon, 3 ft. distant," as the case may be.

*Using Masks and Disks.* Prints are sometimes required with an oval (or square) centre and white margins: this is effected by interposing a black mask of the desired size and shape (obtainable from all dealers) between the negative and the sensitive paper. The black paper prevents the passage of light and leaves white margins to the print. If gray margins are required, a disk (to fit the mask) is attached to a sheet of glass the same size as the negative and arranged so that registration is easily effected; the print is first made with a mask and is then placed in contact with the disk and plain glass (the negative being removed from the frame), and again exposed for a second to the light. If a black border is required the exposure of the margin must be extended three or four seconds.

*Vignetting.* To vignette bromide prints, the printing frame must be covered with a piece of cardboard in which a small hole (about 1½ inches by 1 inch for a cabinet head and bust) is pierced. The hole *must* be covered with a sheet of white tissue paper which will diffuse the light and cause it to travel without harsh lines beneath the opening, and make the print with perfectly gradated edges. It is sometimes an advantage to move the negative while printing vignettes; but it is not absolutely essential if the hole in the cardboard is not too large and if the card is removed some little distance from the negative. If the card is too close to the negative, the gradation will be abrupt and the vignette will not look well.

*Cloud Printing.* This requires some care in order to avoid harshness and sharply defined lines. If the sky of the negative prints white, the addition of clouds from another negative is not difficult; but if it is at all thin, the entire sky must be carefully painted out with a deeply opaque pigment in order to make it quite dense and unprintable.

As a bromide print cannot be examined while in progress; that is, cannot be seen at all before development, careful registration is desirable in order to prevent printing the clouds across the landscape instead of above it. To do this an opaque mask should be made thus: Make a print from the negative on P.O.P. and, without fixing or toning it, cut it carefully in two parts following the horizon line as nearly as possible, then expose to light, until quite black, that part representing the landscape. Attach this to the glass side of the cloud negative (with the paper side of the P.O.P. in contact) and see that the bottom edge and the right corner of the paper and glass (viewed from the glass side of the negative) exactly coincide. To make use of this arrangement, you first make a print from the landscape negative, making sure that the negative and paper are firmly pressed against the bottom and left-hand side of the printing frame when looking toward the film side of the

negative; mark the registered corner with lead pencil in order to prevent mistakes in the second printing.

To print the clouds, you put the negative in the frame and press it well home to the left-hand corner and the base of frame (looking at the film side, of course), and then put the print in contact with the same precaution and replace the back. Now take a piece of brown paper with one edge roughly torn in shape of the horizon line of the mask, and cover the entire negative on the glass side. Hold the covered frame in your hands at a distance of (say) four feet from the gas and turn on the white light. Directly the light is up, draw the paper slowly downward until the horizon line is just passed, and then *immediately* begin to slowly push it upward toward the top of the sky. Do this steadily and slowly for (say) four to six seconds, according to the density of the cloud negative. With a good thin cloud, four seconds should be quite enough, but you can easily settle this point on developing the first print.

*Printing from Dense Negatives.* Dense negatives require much longer exposures than those of "average" (or ideal) density. This may often be prolonged to twice or three times the normal exposure at the same distance. A yellow colored negative increases the exposure greatly, as much as ten to thirty times the normal frequently being requisite to get a decent print. An over dense negative that gives very harsh prints by other printing processes can be made to yield prints of exquisite softness on bromide paper by giving a full exposure at a *short* distance from the gas.

*Printing from Thin Negatives.* Thin negatives, on the other hand, require quite different treatment. In order to get plucky prints from very thin negatives, useless in other processes, we must give a very brief exposure at some distance from the gas; and here it may be well to note that removing the negative to a greater distance from the light is equal to decreasing the actual time of exposure and has other advantages in connection with thin negatives with which theory does not seem to agree. To print from a very thin negative, then, instead of four seconds at eighteen inches, let us cover it with a sheet of tissue paper and give it four seconds at a distance of three or four feet and note the result on development. If it appears to be over-exposed, we may reduce the time of exposure to three seconds at the same distance and modify the developer, as will be explained later on.

*Development of Prints.* I shall presently describe the use of several well-known developers, but it must be well understood that, whatever formula is adopted, a preliminary soaking of the print before development must be done.

When we are about to develop a number of prints we must first soak them in plain cold water until quite flaccid, otherwise the application of the developer would cause the dry print to cockle and curl, and the development would not be regular. This rule applies equally in the case of one print only as when a hundred are ready for development; a prolonged soaking in plain water having no ill effect.

*The Iron Developer.* This is one of the developers most frequently recommended for bromide work, but personally I never advise its use (especially by a novice) because the use of the acid clearing bath, which is an essential part of the process, is so frequent a cause of disaster and yellow prints. The formula is as follows:

A

| | |
|---|---|
| Potassium oxalate | 1 pound |
| Potassium bromide | 5 grains |
| Hot water | 48 ounces |

B

| | |
|---|---|
| Iron sulphate | 1 pound |
| Citric acid | 4 drams |
| Hot water | 32 ounces |

To six ounces of A add one ounce of B; this order of mixing must be observed or a dense precipitate of ferrous oxalate will be formed.

Place one of the soaked prints face (which may be distinguished by its "slippery" surface) upward in a clean porcelain dish and pour the developer over it as evenly as possible. With this developer, the image comes up very rapidly, so that it is not advisable to try and develop more than one at a time. If the first print of a batch appears to be over-exposed, that is, if it flashes out instantly and the high-lights become rapidly clouded, add to each ounce of mixed developer from 10 to 30 drops of a 10 per cent. solution of potassium bromide which will act as a restrainer, retard development, and keep the high-lights clear while the shadows acquire density. Underexposed prints can rarely be made to give passable results with ferrous oxalate. The addition of a trace of hypo to the developer has been recommended for bringing up their detail, but the result is far from good.

As soon as development is complete the prints must *not* be put in clean water, but must be transferred direct from the developer to the following acid bath:

| | |
|---|---|
| Acetic acid | 1 dram |
| Water | 32 ounces |

After an immersion of one minute, the operation must be twice repeated in similar baths that have not been previously used; this is to remove the iron from the print. A thorough washing must next be given to remove the acid and the print may then be fixed for at least fifteen minutes in

| | |
|---|---|
| Hypo | 2 ounces |
| Water | 20 ounces |

After fixing (no matter what developer has been used) the prints must be thoroughly washed in several changes of water for at least two hours.

The chief reasons against the use of ferrous oxalate are lack of control over development and the necessary use of an acid bath. Unless the acid bath is used the prints will be yellow because of the iron in them, and if the acid is not entirely removed before fixing the prints will be yellow owing to the decomposition of the hypo by the acid in the print, which causes deposition of sulphur.

*Metol Developer.* With this, and the other developers I shall mention, an acid bath is not necessary, and so one cause of failure (and extra work) is obviated. I have somewhat amended the following formula to meet the needs of workers on a small scale, and have also arranged A and B to balance each other without disturbing the relative proportions of the ingredients.

A

| | |
|---|---|
| Metol | 120 grains |
| Water (cold) | 24 ounces |

Dissolve *completely* and then add

| | |
|---|---|
| Sodium sulphite | 2½ ounces |
| Potassium bromide | 15 grains |

Shake until completely dissolved but do not apply heat.

B

| | |
|---|---|
| Potassium carbonate | 350 grains |
| Water | 8 ounces |

For use, mix three parts by measure of A and one part of B.

With this developer and a normal exposure, the image should appear in a few seconds and development should be complete in about two minutes. As fast as the prints are developed they should be immersed in

| | |
|---|---|
| Salt | 2 ounces |
| Water | 20 ounces |

to stop development. When all are developed, they must be rinsed for a minute or two in clean water and then fixed. Over-exposure is remedied by the addition of potassium bromide solution (as in the case of ferrous oxalate); under-exposed prints should be developed in a weak solution such as

| | |
|---|---|
| A | 3 parts |
| B | 1 part |
| Water | 4 parts |

Development will take longer, but the weaker solution will help to bring up the detail without the harshness of the shadows that would be the case if the normal developer was used.

*Hydroquinone and Eikonogen.* The advantage of combining eikonogen with quinol lies in the fact that one provides what the other lacks, the eikonogen tending to give detail without density and the quinol (in inexperienced hands) giving density without detail. The following formula will be found very satisfactory:

A

| | |
|---|---|
| Quinol | 40 grains |
| Eikonogen | 120 grains |
| Sodium sulphite | 480 grains |
| Citric acid | 20 grains |
| Water to | 20 ounces |

Dissolve the sodium sulphite and citric acid in 15 ounces of water, then add the other ingredients and enough water to make a total bulk of 20 ounces.

B

| | |
|---|---|
| Sodium carbonate | 60 grains |
| Sodium hydrate | 30 grains |
| Potassium bromide | 5 grains |
| Water to | 20 ounces |

For use, mix one part of A, one part of B and two parts of water. The same remarks as to over- and under-exposure apply as in the case of metol.

*Toning Bromide Prints.* The "tone" or color of the deposit depends largely upon the accuracy of exposure and the developer employed. Ferrous oxalate gives a rich black deposit, but to my mind metol and the combined eikoquinol give tones at least as beautiful with pretty gray half-tones.

But some people prefer warmer colors, brown and red for instance, and some get brownish blacks (through over-exposure and the use of bromide) which they would like to change.

The color of the deposit may be changed in various ways by treating the print in baths of different metals. I will give a brief outline of the methods employed, leaving readers to modify them to suit each particular case.

*Black and Blue-black Tone.* Brownish black prints can be much improved after fixing by immersion in a strong bath of gold chloride; the following is the strength used by me:

A

| | |
|---|---|
| Ammonium sulphocyanide | 20 grains |
| Water | 1 ounce |

B

| | |
|---|---|
| Gold chloride | 2 grains |
| Water | 1 ounce |

When quite dissolved add B very gradually to A, shaking almost continuously. The fixed print should be washed for at least fifteen minutes before toning, and should then be placed in a clean tray while the toning bath is poured over it. The solution must be kept moving and the print

must be removed and washed directly the desired tone is reached. Prolonged immersion will cause the print to acquire a deep blue tone.

*Brown and Red Tones with Uranium.* Prints immersed in the uranium toning bath gradually become warmer in tone, changing from black to brown and brownish red until they assume a deep red nearly approaching the well-known Bartollozzi chalk.

Prints to be toned by this process must be *thoroughly* free from hypo or stains will be the inevitable result. The toning bath should be made up as follows, and it must be used at once, as it will not keep after mixing A and B:

A

| | |
|---|---|
| Potassium ferricyanide . | 20 grains |
| Water . . . . . | 20 ounces |
| Glacial acetic acid . . | 1 ounce |

When quite dissolved add

B

| | |
|---|---|
| Uranium nitrate . . . | 20 grains |
| Water . . . . . | 1 ounce |

Immerse the print and keep the solution in motion until the desired color is produced, then wash the print for half an hour in several changes of water acidulated (1 dram in 30 ounces) with acetic acid. Weak, under-developed prints are much improved by this method of toning.

At the end of half an hour, if the whites are at all yellow they may be cleared by immersing the print for a minute or two in the following bath:

| | |
|---|---|
| Ammonium sulphocyanide | 20 grains |
| Water . . . . . | 10 ounces |

After immersion, rinse the print for five minutes and dry.

*Intensification.* It sometimes happens (especially when too little light has been used to properly judge development) that one acquires a collection of prints that, owing to under- or over-development, are useless; let us see how they may be rendered serviceable.

An under-developed print, though weakly looking and "washed out," simply needs intensification to give it the requisite pluck. The foregoing uranium bath acts as an intensifier while conferring a ruddy tone on the deposit. A black deposit can be obtained by intensifying the well-washed print with mercury. The print must first be immersed in a saturated solution of mercuric chloride until the image disappears; it must then be again thoroughly washed to remove all traces of free mercury and may then be redeveloped by flowing over it an old ferrous-oxalate developer. If ferrous oxalate is not at hand, an old metol developer may be substituted, but the former is the more reliable.

When the image is sufficiently intense, the print must once more be thoroughly washed. All the toning and intensifying operations may be conducted by daylight.

*Reduction of Density.* Over dense prints can be made fit for many purposes by means of a "reducer" capable of dissolving part of the deposit. The best for the purpose and the one least liable to cause stains is known as the Belitzski's; it is prepared thus:

| | |
|---|---|
| Water . . . . . | 60 ounces |
| Potassium ferric oxalate | 3 ounces |
| Sodium sulphite . . . | 3 ounces |

Dissolve and add to the red solution so obtained:

| | |
|---|---|
| Oxalic acid . . . . . | 1 ounce |

Shake until the solution turns green and then immediately pour off the solution from any crystals remaining undissolved. To this solution add

| | |
|---|---|
| Hyposulphite of soda . | 15 ounces |

and shake until dissolved, when it is ready for use.

The print to be reduced need not be free from hypo, but should be rinsed for a few minutes after fixing (or soaked until limp, if previously dried) and may then be placed in a tray and flooded with the reducer. The tray must be well rocked and the print, when sufficiently reduced, must be removed without delay and rapidly washed in running water.

*Some Cheap and Useful Trays.* If large-sized prints are made, the cost of suitable trays becomes a very serious item. The expense of these may be reduced to a mere nothing, without loss of effectiveness, by the substitution of home-made ones. All that is required to make a tray of any size is a thin wooden confectionery box (or the bottom part of a larger case) lined with the shiny white marbled oilcloth known as "American mole-skin." This is fitted inside the box (the corners being turned under) and secured by a row of tacks around the top edge. No further lining or preparation is required and the tray will stand all sorts of ill treatment. As for durability: I had three such trays made out of old herring-boxes picked up at Calgary and lined with mole-skin that had already seen service as cover to a wash-hand stand and chest of drawers in a Canadian boarding-house. For upward of a year those trays were used daily and travelled many hundreds of miles by mule and dog train, and were not worn out when I returned home. My porcelain trays were smashed by a fall from a refractory mule, but the rough and ready makeshifts were a priceless boon.

It seems to me that by practising economy of this kind and in various similar ways (*i. e.*, where economy is necessary, as, unfortunately, it sometimes is) the cost of practising our pet recreation is very materially reduced.

## AN INTERESTING NEW BOOK

*The Artistic Side of Photography: Theory and Practice.* By A. J. Anderson. Illustrated with 12 photogravures, 12 halftones, and numerous line drawings; 360 pp., cloth, gilt top. Price, $4.00, net. New York: Dodd, Mead & Company, 1911.

Mr. Anderson has produced the most enjoyable book on photography that we have yet had the pleasure of reading. Not only is the book vastly enjoyable, it is also most helpful and instructive. It is not a book for the beginner, but practicing photographers, amateur and professional, will enjoy every page of it. If they are open minded they can learn much from it.

The book is divided into six sections: (A) "The Medium of Photography," with chapters on (I) Is Photography a Fine Art? (II) How to Approach the Subject; (III)Artistic Quality of the Medium; (IV) Artistic Use of the Medium. (B) "The Handling of the Medium": (V) Secret of Exposure; (VI) Secret of Development; (VII) Orthochromatic Rendering; (VIII) The Print. (C) "Some Artistic Principles of Photography." (IX) Perspective and the Lens; (X) An Agreeable Perspective; (XI) Composition; (XII) Composition in Photography. (D) "Working in Tone": (XIII) Tone and Key; (XIV) Values; (XV) Emphasis. (E) "The Choice and Treatment of the Subject": (XVI) The Influence of Japanese Art; (XVII) The Subject in Photography; (XVIII) An Essay on

Nature; (XIX) Sympathy; (XX) Impressionism; (XXI) Some Essentials of Expression. (F) "Some Practical Suggestions on Photography": (XXII) The Rendering of Color into Monochrome; (XXIII) Additional Hints on Landscape Work—The Pinhole. (XXIV) Some Elements of Portrait Work—Amateur Portraiture; (XXV) Artistic Portrait Work; (XXVI) Flower Photography; (XXVII) Some Suggestions on Architecture; (XXVIII) Technical Hints; Index (5 pp.).

In view of the article on Velasquez elsewhere in this issue, the following quotation from the chapter on artistic portrait work, showing Mr. Anderson's style is interesting: "When Velasquez set himself to paint a portrait he set himself the task of painting a likeness and not a "composition"; he does not appear to have worried much about the posing or lighting, but he seems to have devoted his whole energy to the interpretation of character and the portrayal of likeness. . . . Mr. Bernard Shaw may have gone a trifle too far when he insisted that if photography had been invented in the seventeenth century Valesquez would have used the lens instead of the paint-brush; but the Spaniard certainly forms an ideal guide to the photographers. The pose of his figures always appears natural, and we are almost tempted to believe that he allowed his subjects to pose themselves; at any rate, his portraits are always characteristic, from the carriage of the head to the carriage of the hands, and from the expression of the features to the position of the feet. In artistic portraiture, naturalness, truthfulness, and individuality are everything; and the planning of Rembrandtesque effects of lighting or Reynoldesque effects of posing is to fling away the substance for the shadow. . . . Assuming that the photograph is to be taken in a studio, all possible arrangements, such as the placing of the seat, background, and camera, rough focussing, and the elementary part of the lighting should be made before the sitter's arrival—a surgeon should not display his knives before an operation—and the sitter should be treated as a welcome guest. . . . Velasquez is a very good guide as to the rendering of hands; there is always a tremendous amount of character in his drawing of hands. First, it will be noticed that he gives his sitters something to hold; in the second he allows them to arrange their hands for themselves. . . . The attitude and employment of Æsop's two hands tell quite as much about his character as his features and expression. . . . Speaking of lighting, the light reflected from a newspaper, from a white dress, or from a First Communion veil, may often be employed with advantage; but the source of the reflected light should be shown, so as to make the lighting appear natural."

Running through the book is a series of conversations with *Monica* that are delightfully humorous as well as instructive.

The illustrations are from pictures by Coburn, Hill, Demachy, Stiegletz, Kasebier, White, Day, de Meyer, Steichen, and others. They are well chosen and very finely reproduced, and quite a valuable addition to the book. These are too few good books on photography, but this one goes far toward filling the void.

---

*Numerous parallel vertical lines* on a negative are produced by using decomposed pyro developer and acid in an old fixing bath cutting the pyro stains out in streaks when precipitating. The remedy would be to use fresh developer, also a new acid hypo bath.

## GEORGE GARDNER ROCKWOOD—1832-1911

AFTER a brief illness, George Gardner Rockwood passed away at his country home in Lakeville, Conn., on July 12, in his eightieth year. In his death, American professional photography has lost its oldest and most respected practician.

Born in Troy, in 1832, he received his early education there, later he received his degree of Ph.D. from Columbia University. He began his photographic career in St. Louis, Mo., in 1853, and in that year produced the first carte-de-visité made in the United States. This desire to keep abreast of the times, if not ahead of them, was a passion with him to the end, only a few weeks before his death he sent out invitations for a demonstration of a new flashlight apparatus to be given in his studio.

In 1857 Mr. Rockwood came to New York, and in partnership with his brother, opened his first studio at Broadway and 13th Street, moving later to Union Square and 15th Street. It was here that he made his greatest successes and photographed all the celebrities of that time, including such national figures as Horace Greeley, William Cullen Bryant, William M. Evarts, Martin Van Buren, President Hayes, N. P. Willis, Ole Bull, Bayard Taylor, Major Anderson, and General Dix, with many of whom he formed a strong friendship. It was Mr. Rockwood's proud boast that he had photographed more prominent Americans than any other photographer.

Mr. Rockwood was a writer and lecturer as well as photographer, and was the author of many magazine articles. In 1886, when WILSON'S PHOTOGRAPHIC MAGAZINE, then the *Philadelphia Photographer*, moved to New York, Mr. Rockwood, then at his Union Square Studio, was at the height of his fame and manhood, and when famous people from all parts of the country were flocking to him, he found time to actively support the magazine, and to the end he was always glad to give to his fellow workers the fruits of his experience and ceaseless activities. In him we have lost a very loyal friend and ever ready helper.

In his younger days Mr. Rockwood was a singer of some note, and tenor in Plymouth Church Choir, Brooklyn, and later a director of music in one of the New York churches. He was a firm believer in associations and conventions, his last public appearance being at the annual banquet of the Professional Photographers' Society of New York, in February, when he told from the floor some of his interesting anecdotes of which he had an unusual fund. In his home life he was unusually happy. The death of his wife some few years ago was a heavy loss to him, and in the death of his favorite son in February of this year the blow was more than he could bear, and undoubtedly hastened his end. He was a man among men and leaves a name that will be held in affectionate remembrance by all whose pleasure and privilege it was to know him.—T. D. T.

---

*Spots.* The subject of spots is an endless one, and when this difficulty occurs it is usually necessary to consider each case individually. Some of the most frequent causes for spots are, however, as follows:

*Round transparent spots with sharply defined edges* are due to air bells in the developer which adhere to the surface of the plate. This may occur either in tank or tray development.

# TRADE NOTES

THE Taylor-Hobson Company of New York have placed on the market a single achromatic lens known as the Cooke Achromatic Portrait lens. This is really the old Rapid View and Portrait lens made twenty years ago by Taylor and Hobson, of Leicester, England, and known then as the R. V. P. For many years the lens has been used by artists like Mrs. Kasebier, Clarence White, and Alfred Stieglitz, and has been preferred by them to the modern anastigmat. It has been marketed as the result of numerous enquiries that have been received for a lens of that type. Whoever expects sharp definition will be disappointed, but the photographer who desires softness and roundness coupled with fine modelling and a true perspective, will be both astonished and delighted.

Each Cooke achromatic portrait lens is furnished in an English sole-leather carrying case, and shows the same fine workmanship that characterizes Cooke anastigmats. The lenses work with a full aperture of F. 7.5. Full particulars will be mailed on request, by The Taylor-Hobson Co., 1135 Broadway, New York.

---

CAMERAS FOR THE PROFESSIONAL is the title of an unusually good catalogue just issued by the Ansco Company, in which the splendid line of studio outfits manufactured by this company is fully described and illustrated. The catalogue also contains the best and generally approved type of apparatus for photo-engraving, such as enlarging, copying, and reducing cameras, plate holders for plate and halftone screen, etc. The Ansco studio cameras are the result of many years of painstaking labor in design and workmanship, and can be relied upon as most efficient and complete studio apparatus. Every camera user should secure a copy of this catalogue, more especially if he is contemplating a new camera.

---

VOIGTLANDER & SOHN, 240 East Ontario St., Chicago, have just issued two neat catalogues, one devoted to Voigtlander cameras and the other to Voigtlander lenses, which they will be glad to mail, either or both, to any of our readers. The name of Voigtlander has stood for quality for a great number of years. Their cameras, a later product than the Voigtlander lens, are splendid examples of the finest camera construction, and while not in the cheap and popular class, they offer splendid value and will interest the man who is in search of the highest efficiency in the camera line.

---

WE recently read of a photographer getting a pound of metol at about half the regular price. This aroused suspicion and the powder was analyzed and found to contain only 15 per cent. of metol, so that even at "half-price" this bargain hunter paid very heavily for his metol. In buying a standard article like metol you can always make sure of getting the genuine article by specifying Metol-Hauff; you get the best and are sure of good results at a minimum cost.

---

WE show below a line-cut of one of the strongest and most attractive posters ever designed to advertise and sell photographic goods. This poster, a lithographic reproduction, possessing an exceedingly pleasing color combination, is bound to attract in most forceful manner the attention of the public wherever it is displayed. The size of the original is 12 x 18¼.

We may add that this poster is also shown in a large scale on the outside wall of the factory premises of the C. P. Goerz Am. Opt. Co., in New York, and as the same poster is used extensively by the other branches of the C. P. Goerz Co., all over the world, the traveling public will soon be familiar with the "Man with the Camera" and will know that the world-famous Goerz products may be had wherever this poster is shown.

# WILSON'S PHOTOGRAPHIC MAGAZINE

A MONTHLY MAGAZINE FOR PRACTICAL PHOTOGRAPHERS

Founded in 1864 by EDWARD L. WILSON
MRS. EDWARD L. WILSON, Publisher and Proprietor
L. WINIFRED WILSON AND T. DIXON TENNANT, Editors

EDWARD L. WILSON, 122 EAST TWENTY-FIFTH STREET, NEW YORK
*Entered at New York Post-office as Second-class Matter*

Yearly subscription in advance, United States and Mexico, $3.00; Canada, $3.25; Foreign Countries, $3 50. Single copies, 25 cents. Subscriptions begin with current issue unless otherwise ordered. Original manuscripts on photographic subjects are solicited, and, if accepted, will be paid for on publication.

## EDITORS' TABLE.

WE were sorry to learn of the death, which occurred on July 18, of Joseph L. Douglass, of Columbia, Mo. During the last twenty-three years he never failed, when renewing his subscription to the magazine, to write us a few lines of appreciation and news of his progress. He was well known and highly respected throughout Boone County, Mo.

---

WE have seen various announcements of a "gymhanka" to be held in connection with the New England Convention, and wondered what sort of a thing a "gymhanka" is. We have heard of Jim Evanoff, Jim Crow, and Gimcrack, but never Gymhanka. Possibly it's going to be a Gymkana—field games more or less cn horseback.

---

SPEAKING of platinum reminds us that No. 115 of The Photo-Miniature Series issued a few weeks ago is devoted entirely to platinum paper and its manipulation, and is the most up-to-date and complete guide to this process. No photographic library is complete without it. No. 116 of the same series, and issued a few days ago, is entitled "Hand-work on Negatives," and is an expert's account of the various methods of improving a negative by mechanical means. Much useful information is given on the methods of removing figures from groups and work of a similar nature often demanded of the professional photographer.

---

WE read strange things in the advertising pages of the photographic press occasionally. Recently in an English contemporary an advertiser of enlargements reproduced in his advertisement a letter from a pleased customer, who, writing from New York, is made to make the following statement: "The 8 x 10 enlargements are turned out of the mill here daily by hundreds, at the rate of $20 and $40 apiece, and are justly in a class by themselves." At this price they certainly ought to be in a class by themselves. Evidently the English printer did not have a cent sign and thought the dollar sign would do as well.

Another advertiser, this time an American one, announces a series of new mounts 12 x 14 for "square" photographs 8 x 10. We always understood a square to be composed of four equal sides and four equal angles. What is the matter with oblong?

---

THE Second Annual Exhibition of the London Salon of Photography will be held at the Galleries of the Royal Society of Painters in Water Colors, 5ª Pall Mall, East London, S. W., from September 9 to October 21. This was the old home of the Photographic Salon for many years, and it is undoubtedly the finest gallery of its kind now in London. The work of every photographer is welcome provided it comes up to the standard the Selecting Committee will set. No other exhibitions are scheduled for the autumn, and it is anticipated that the best work from all over the world will be entered. Work from the United States and Canada may be sent unframed. We have a supply of entry forms with full details and will be pleased to forward copies to those interested. We will undertake to receive prints at this office to be forwarded to London in one shipment.

---

WE have "photographers of men only," and "children only," and judging from the following clipping, will soon have "photographers of thoughts only." Dr. Max Baff, psychologist and investigator of the Polytechnic Institute at Worcester, Mass., says: "We have light rays and sound waves, and the question does not seem far fetched if we ask whether we also do not have mind rays. We hear that such experiments have brought surprising results when carried on by Japanese savants, and it seems to me that the next thing is for us to go into the matter in this country. As a method of taking such thought photographs, I would suggest that the best way would be to expose the film in a vacuum tank, and to have the subjects whose thoughts are to be photographed placed near the tank, even with their heads against it. To develop the film roll, after it had been unwound in the darkness, with a pair of subjects thinking on a given subject while it was being unrolled, might show some extremely interesting results."

V.P. FOR RHODE ISLAND
B. C. HORTON

V.P. FOR CONNECTICUT
G.-S. NORTH

V.P. FOR MARITIME PROVINCES
J. Y. MERSEREAU

V. P. FOR MAINE
L. G. GERRY

PHOTOGRAPHED BY H. H. PIERCE

PRESIDENT J.H. GARO

V.P. FOR VERMONT
A. ALLYN BISHOP

SECOND V.P.: J.P. HALEY

TREASURER W.H. PARTRIDGE

SECRETARY GEO. H. HASTINGS

OFFICERS PHOTOGRAPHERS' ASSOCIATION OF NEW ENGLAND,
1911-1912

# WILSON'S PHOTOGRAPHIC MAGAZINE

FOUNDED IN 1864 BY EDWARD L. WILSON

VOL. XLVIII SEPTEMBER, 1911 No. 657

## PHOTOGRAPHERS' ASSOCIATION OF AMERICA

### National Convention Held at St. Paul, Minnesota, July 24 to 29, 1911

TUESDAY, JULY 25

THE Convention was called to order at 10.35 by President Geo. W. Harris.

President: Ladies and Gentlemen, fellow photographers: It gives me great plesaure to call you to order for the Thirty-first Annual Convention of the Photographers' Association of America.

Before we go ahead with any of the program, I would like to call for Past President Cramer and Past President Holloway to escort Mr. Dührkoop to the platform. I would like Past President Vandeventer and Past President Proctor to escort Miss Dührkoop to the platform. I would ask Past President Stein and Past President Medlar to escort the Governor of Minnesota to the platform. (The several people are escorted to the platform.)

Mr. Cramer: It affords me great pleasure to introduce to you our illustrious and famous guest, Mr. Dührkoop. It affords me great pleasure to introduce Miss Dührkoop.

President: I would also like to ask the chairman of the Local Entertainment Committee, our great helper, Mr. Ben Golling, to escort Dr. G. L. Morrill to the platform. I am going to leave the introduction of Dr. Morrill until a little later.

I am going to ask our First Vice-President, Mr. Ben Larrimer, to bring to the platform the President of the Women's Federation, Miss Carnell. You know I always call Miss Carnell Aunt Mary, because we all love our aunts, and it seems to me that she is the biggest aunty I have ever had. The attendance of this Convention would be only one-half of what it is if it had not been for the ladies, and she has directed that part of the work, and it gives me great pleasure to introduce to you Aunt Mary Carnell.

If there are any other past presidents of our Association in the audience that I have failed to mention, I would like to have them come forward.

Mr. Cramer: I should like to appoint our ex-president, Mr. Frank Medlar to escort our worthy Mrs. President, Mrs. Harris, to the stage.

President: It now gives me pleasure to do the next little act, because I don't think that this Convention, or the members of it, have ever been

addressed by a man of this kind. We have listened to mayors and we have listened to doctors, and I remember once we listened to a preacher, who gave us an address of welcome to his city. So, fellow photographers I am more than glad to introduce to you our Governor photographer, because I made him a photographer this morning—the Governor of Minnesota, Governor Eberhart. (Applause.)

Governor Eberhart: Mr. President, Papa Cramer, Mamma Cramer, Ladies and Gentlemen: It may be said that there are honors both ways, and I feel that it is the greatest honor that I have had conferred on me, that of being permitted to welcome such a distinguished gathering to St. Paul and the State of Minnesota—the honor you have conferred upon me this morning. I had the pleasure of being here last night and of being admitted as the youngest of Papa and Mamma Cramer, and I have just one ambition, and that is that I may be a worthy son. I don't blame your President, Mr. Harris, for wanting to sit by his aunty, if the aunties that we sit by are just as good as the one that he presented to us. (Applause.) He certainly cannot hold any better hands than that. I think it is but proper that the ladies should come with the photographers. I have met so many of the photographers, and I regret to say that we never do have an opportunity to know the distinguished helpmates that they had, and which makes it possible for them to attain the attainments that they have. I am sure that you will go away from this city feeling that you have never been better and more loyally and more kindly and hospitably entertained than here. I think the wives should come along.

You come to St. Paul, and it is a good thing to get together, and no one takes more pride on this occasion, not merely on being adopted by your famous Papa and Mamma Cramer, as I do, but to meet with all of you as I met last night, and I have never met a more kindly and generous and agreeable and charming lot of people than I did last night. I take great pleasure in welcoming you. I hope you will feel, when you go away, that you want to come back, and I am sure that your visit to us will be profitable to us all, and a lesson to us all. I wish every man and woman in the State could come here and see this practical display. It would be something that would be of interest to them, and teach them what the photographer could do in bringing out so many beautiful likenesses. I hope you will go away feeling:

"Let fate do her worst, these are moments of joy."

You will have the pleasure of being addressed later on by Dr. Morrill, of Minneapolis, a man who does more or as much as anyone to bring sunshine and joy to the people in this and other cities. I shall not keep you any longer but wish to extend to you, in behalf of my position in this State, and in behalf of the photographers here, the best wishes for success, hoping that the Thirty-first Convention of Photographers here may be the best in your history, and result in the good of the art and the good of the people in this State and this Nation, and this city itself. I thank you.

Mr. Cramer: In appreciation of the great honor and kindness that the Governor of this State, the Hon. Mr. Eberhart, has bestowed upon us, I wish that the Association might confer upon him an honorary membership for life of this Association. Motion seconded and carried unanimously.

President: It gives me great pleasure

to extend this honorary membership to you.

Governor Eberhart: I appreciate it and shall value it as long as I live.

President: There are a few telegrams and announcements, and I will ask the secretary to read them.

Secretary: I have a night letter from Mr. J. C. Abel, who is very ill in New York City:

NEW YORK, N. Y., July 24, 1911.
MANLY TYREE,
Secretary Photographers' Association,
St. Paul Armory, St. Paul, Minn.

Dear Sir: To be lying on my back fifteen hundred miles away while your convention opens is a new experience to me. Words cannot express how deeply I regret not being with you. I know that my presence could add nothing to the success of the St. Paul convention. I am only glad that my small share of the work was completed before I was put down and out. I feel that this northwestern convention will be one in which many things for the good of the craft will be enacted, and I hope all records in attendance will be broken. My love to the boys of the northwest and to President Harris and his brother officers, and success to the good old P. A. of A.

Cordially,
J. C. ABEL.

BOSTON, MASS., July 24, 1911.
GEORGE W. HARRIS,
President Photographers' Association of America,
St. Paul, Minn.

Dear Sir: The photographers of New England send cordial greetings through you to the Photographers' Association of America. May the splendid progress of the Association continue under your wise administration, to the end that the photographers of America shall become a universal brotherhood and prosperous members of the professional community. Kindly extend to your members a cordial invitation to be present at the Bridgeport Convention and Exhibition of the New England Association during the week of September 11. I can promise every attendant a display of photographic work unequalled in extent and variety and a hearty greeting from the entire membership of the old New England.

Fraternally,
J. H. GARO.

BOSTON, MASS., July 23, 1911.
GEORGE W. HARRIS,
President P. A. of A.,
St. Paul Hotel, St. Paul, Minn.

Dear Mr. President: Find myself physically unable to take this long trip; send all officers and convention members best wishes, and personally regret not being with you, as I am always happy when with the boys. May your convention be the best ever, for your hard work truly entitles you to the best possible success.

Cordially yours,
CHARLES WESLEY HEARN.

President: I wish to say in behalf of Mr. Abel, the man has given us more time and more help than any other person for the success of this Convention. There was never a time that I needed him in any capacity, to run from any city where he lived, but he was ready to go, and he has really helped me personally more than any other one man, and helped the board more.

Mr. Cramer: I cannot let this occasion pass without offering a resolution that we send a telegram to Mr. Abel, clothed in the most sympathetic manner, and wish him a speedy recovery. In 1888, when this Convention was in Minneapolis, the only one I have missed, I was sick in bed, and the Convention sent me a telegram, which was so full of good words that it helped me materially in my recovery. I make a motion that we send a telegram to Mr. Abel wishing him a speedy recovery.

Mr. Proctor: There is nothing that would give more satisfaction to Mr. Abel than this telegram. He has his heart and soul right in this work, and everyone of you knows that he goes from one State association to another. It gives me great pleasure in supporting this motion. Motion carried.

President: The next is the President's address. I am not a very good speaker and am not going to tire you with any talk that would tell you how fine the Association is going and how well we all look, but I am going to give you a paper which I have called the President's Suggestions; it is more on the order of something that I can give you from my experience in the last year.

I have visited every convention, I think, except one, that has been held recently in the different States, and I have got the consensus of opinion from those States that I bring to you as a national association. Some of them, perhaps, will be forced through or carried through at this meeting; others you may want to hold over. I have placed them in the best possible way that I can give them to you, and I am going to ask you when this is complete that you send it to the Congress of Photography and have them thresh it out.

### *The President's Suggestions*

I feel in duty bound to make a few suggestions to the Convention for the general good of our organization, as the result of my experience as President of the organization for the last year.

The first is the distribution of expenses among the officers, which I consider all wrong as at present conducted.

The outgoing President should be allowed his railway and hotel expenses for his attendance at the following convention. First, because of the help that he could render in advancing and finishing plans that have no doubt been started when he was President.

Second, because of the added dignity and standing it would bring to the ex-President, and third, because of his usefulness on committees and the help he would be able to render from the floor.

The incoming President should be allowed $100 to pay for a stenographer and typewriter during his term of office. He would have then no excuse for neglecting the correspondence of the Association.

The First Vice-President should be allowed the same amount for a like purpose.

The Second Vice-President has been designated of late years as the gatherer of advertising for the Annual. I think that 5 per cent. of the amount collected from this source for the Annual should go to the one who makes the collection as a just reward for the hard work he does. The advantages of such an arrangement are too obvious to require discussion among business men.

The Secretary should receive 5 per cent. of the total for all floor, wall, and desk spaces that he sells, or on any other earnings that he makes for the Association, exclusive of membership and Annual.

The Treasurer should continue to receive the same as he is allowed at this time.

The foregoing plans would result in a great deal more good to the Association, as far as the service is concerned, than anything else. As it is now, the Secretary is very much overpaid compared with what his fellow officers receive.

The Treasurer is obliged, five or six times a year, to address envelopes to the members of our organization. I recommend for his use the purchase of an addressing machine as a time, labor, and money saver.

The Congress of Photography is a success, as you all know. But it could be made a much bigger success by being brought out along improved lines.

I have attended many of the State conventions held this spring, and I am satisfied that if we could devise a plan that would do away with the per capita tax, and make our State Associations' representative to the Congress upon the basis that we are to have two representatives from each State Society, then we would have no trouble in getting every State in the United States and Canada interested.

The adoption of this plan would be to make the Congress like the Senate

of the United States. No matter how large a State organization might be, two men would represent that State organization.

In working out such a plan along these lines, all States would be sufficiently interested, provided we made the Congress work along a given line, and make that line of work something of importance.

To carry out this idea, I have divided the Association and the Congress into two parts, making the Congress convention a place to decide where this Association should meet next year, and also that they select and elect the officers, and transact all other business of the Association.

Allotting such duties exclusively to the Congress, there would be left for the Association the educational features, such as the School of Photography, Demonstrations, Lectures on Art Subjects, etc., and all entertainments of various kinds.

A few words now as to how we can best help the State Associations. The dues should be rearranged, to some extent. My suggestion would be that the dues be made three dollars a year for photographers who are members of any State organization, and five dollars for those who are not members of a State organization.

The initiation fee should also be abandoned. It often happens that a man will pay his initiation fee and then drop out for a few years. It should not be necessary for him to pay a second initiation when he wants to rejoin, as is now the case.

Another plan that should be taken up this year is the one which I have been suggesting to all of the State societies that I have attended, namely, that a line be drawn through the United States running north and south, dividing the country into a western division and an eastern division, so that a convention city could be chosen on alternate years, first on the east side, and the next year on the west side of that line.

Such a plan would effectually do away with the idea that any part of our country is getting any the best of it as regards conventions.

I have given considerable thought as to where this north and south line should be drawn.

I think the Mississippi River should be followed northward to the Ohio River; thence along the Ohio River to the Indiana-Ohio State line; thence to the Ohio-Michigan State line; thence along that line to the Great Lakes.

Such a line would divide the country so as to give us about the same number of large cities on each side of the line. This would put cities like Detroit, Indianapolis, Chicago, and Milwaukee in the western division, and Louisville, Memphis, and New Orleans in the eastern.

Special from Washington, D. C., July 17: The centre of population of the United States is 4¼ miles south of Unionville, Monroe Co., Ind., according to the census bureau announcement today.

In reaching this conclusion I found that the States on the Pacific slope, which include Washington, Oregon, California, Idaho, Nevada, Utah, Arizona, and Alaska, are all west of the Rockies. They have a total of 1696 photographers, and with only six large cities, can hardly be taken into consideration in deciding this dividing line.

That leaves the West with the following States: Arkansas, Colorado, Iowa, Illinois, Indiana, Kansas, one-half of Louisiana, Michigan, Minnesota, Montana, Missouri, Nebraska, New Mexico, North Dakota, Oklahoma, South Dakota, Texas, Wisconsin, and Wyoming—18½ States, with a total of 6135 photographers and twelve large cities.

In the East we have the States of Alabama, Connecticut, Delaware, Dis-

trict of Columbia, Florida, Georgia, Kentucky, one-half of Louisiana, Maine, Maryland, Massachusetts, Mississippi, New Hampshire, New Jersey, New York, North Carolina, Ohio, Pennsylvania, Rhode Island, South Carolina, Tennessee, Vermont, Virginia, West Virginia—23½ States with 6395 photographers and twenty-two large cities.

Looking backward over the conventions of the past, the dividing line I have suggested would give us, since 1881, fifteen cities in which conventions have been held on each side of that line. This proves that the East has not had more than its share. To my mind, it has been equally distributed East and West, when you consider the number of photographers in these different areas, with a balance in the East of only the small number of 260.

Another phase of the question that comes to my mind is that a few of our members fear that this convention may some day be carried to the western coast, and if so, that there is a probability of its being kept there.

The adoption of the suggested plan would destroy this feeling held by a few members, for then it would be safe to send this convention out even to the farthest city in the West, because we would have a positive assurance that it would be back east of the line the following year.

Personally, I desire to go on record now as being in favor of San Francisco for 1915, the World's Fair year out there.

I have devoted a great deal of time to a careful and thorough consideration of these ideas, and my recommendation now is that we pass this year, if it finds favor with the members, the north and south line proposition.

All the other ideas embodied in the foregoing suggestions should be submitted to every President and Secretary of all State Societies of this country and Canada, with the request that they give the suggestions and ideas their careful thought and consideration and return the results of their repective judgments to our Secretary, to be threshed out in convention the ensuing year.

There is no immediate rush for the adoption of these ideas, and I think it would be preferable first to receive the recommendations and suggestions from the different State organizations before taking any definite action.

President: The next on our program will be the report of the academy committee, by Mr. Lewis. This academy committee was appointed last year to carry out the suggestions laid down by us.

*To the President and Members of the 1911 Convention:*

Gentlemen: Your committee of ten, appointed for the selection of names for the formation of the proposed academy, begs to report as follows:

Since appearing before you shortly after our appointment at Milwaukee with a report of progress only, the committee held a meeting in January last in Chicago, at which time a careful consideration of names was made and the chairman instructed to ascertain what number of those considered would accept such a responsibility.

The replies subsequently received proved there was not enough among the eligibles who were willing to serve to make possible ultimate success.

The result, therefore, in the minds of your committee points to the fact that the academy project is not looked upon with sufficient favor to warrant further consideration.

We therefore urgently request that with the acceptance and adoption of this report the committee be discharged.

Respectfully submitted,

C. L. Lewis,
Chairman.

Mr. White (New York): I move the adoption of the report as read, and that the committee be discharged.

Mr. Medlar: I second it. Motion carried.

President: The motion is carried and the committee discharged.

I have what I consider the best surprise of the day on hand at this minute. We have a man with us here who, as the Governor told you, has been doing nothing but good in these twin cities. He did me more good when I was up here at the holiday time than any other one thing, and I take great pleasure in introducing to you our friend and helper, Dr. Morrill, of the People's Baptist Church.

Dr. G. L. Morrill: The glorious day in Minnesota, upon which the sun smiles in pleasure, when nature seems alive in every step and every thing, and praising God from whom all blessings flow, and the music mingles with my own country on the banks of the Mississippi, I greet you, etc.

President: If there is no further business to come before the meeting, we will stand adjourned until tomorrow morning.

## Wednesday Morning Session

President: We shall now hear the Treasurer's report.

Mr. President, Ladies, and Gentlemen: I am pleased to report as follows:

This report of the financial condition of the P. A. of A. is the report that is made at the annual board meeting in January, and it represents the condition of the treasury at the beginning of the calendar year, after all collections are made and bills paid for the previous convention. While it is a true condition of the treasury, the report is made at the most favorable time, when surplus is greatest, as expenditures begin immediately following the board meeting, and receipts are light until convention time. However, I am pleased to report that your treasurer has, in addition to the formal report herewith submitted, about $150 of accrued interest to be added to the funds of the Association. While I have the floor I would ask that the members assist the treasurer as much as possible when remitting dues and send the proper amount. The new constitution with its varied memberships and dues multiply the duties of your treasurer, and if when remitting you send your membership card or the full amount of statement you can save the treasurer a great deal of unnecessary correspondence. If you are a member of an affiliated State association and have no card, write your State treasurer. If the per capita tax has been paid into the national treasury, he has them and you are entitled to yours. I would ask that you do this and lighten the burdens of your next national treasurer, whoever he may be.

The financial report is as follows:

SUMMARY OF TREASURER'S ACCOUNT FOR 1910

*Receipts*

| | | |
|---|---|---|
| Cash on hand Jan. 1, 1910 . . . . . | | $6,483.22 |
| Received from memberships and dues | $3,284.00 | |
| Received from Chicago day buttons . . | 114.50 | |
| Received per capita tax affiliated societies . . . . . | 296.00 | |
| Received per capita tax affiliated societies (1911) . . . | 62.00 | |
| Received from sale of ladies' pins . . . | 116.50 | |
| Received from sale of background, membership list, etc. . | 15.00 | |
| Received from sale of space in convention hall . . . . . | 3,125.00 | |
| Received from advertisers in Annual . | 1,150.00 | |
| | | 8,163.00 |
| | | $14,646.22 |

*Expenditures*

| | | |
|---|---|---|
| Paid out on vouchers Nos. 933 to 1021, inclusive . . . | $7,613.53 | |
| Cash on hand Jan. 1, 1911 . . . . . | 7,032.69 | |
| | | $14,646.22 |

President: I wish to call the attention of the members to two statements in that report. One is that this is the very highest and not the lowest ebb of the treasury, and it is a disadvantage to the Association that we have to give that report at the very height, because it looks as if we have all this money in the treasury continually, and we have not. Another thing I want you to notice is that the treasurer has earned for us the sum that he stated as interest. It is the first time in the history of the Association that we have been able to collect interest. I don't mean by that that the other treasurers would not do it, but the money has been enlarged since this treasurer has been in, so that we can get interest from him. He places it in such shape that we can get this little interest.

President: Is the auditing committee ready to report?

Mr. Townsend: I did not know this committee was to report at this time, but am glad to say that we have audited the books and found them correct. I wish to compliment the treasurer on the way those books are kept by the treasurer of the Association. This report is signed by Tyree and Townsend.

President: We will hear from Mr. Lewis on whatever he has to give us this morning.

Mr. Lewis: Mr. President, Ladies, and Gentlemen: The deliberations of the Congress on the matter of the division of the United States into an eastern and western section as presented to you by the president in his report resulted in a unanimous vote for the adoption and recommendation to this body that we have it drawn as described. If anyone has any doubt as to what the exact detail of the matter was, I could again read some part of the President's report here and refresh your memory. However, I believe every one is thoroughly familiar with it, as he went quite into detail, so if there is no request of that kind, we will simply leave the matter as I have stated it.

President: As I understand, this committee will have to put this in shape as an amendment to the Constitution, or at least a change in the Constitution; consequently we will take this up to-morrow morning, and will now give notice to the members that there will be this change proposed to the Constitution. There are other things also that the Congress have in mind that they wish to change; for instance, they have accepted, as I understand it, the difference in the payment of the board. I wish also to give warning for that, and then the whole matter can come up tomorrow in its different sections.

President: Any other new business?

Mr. Rau: I would like to call the attention of the members of the Photographers' Association to the Copyright League of America. This matter of the Copyright League has been drifting slowly along since the passage of the last copyright law, and many of the members have dropped out or forgotten about it, and we want to awaken interest, and I just want to call your attention to the new executive board, all of the members of which are generally very much interested, and those who are here will probably say a word or two about the matter. In the first place, the object of the League is to protect photographic copyrights, to suppress piracies, and to generally promote the interest of the profession.

The names of the executive committee are: J. C. Strauss, St. Louis; George W. Harris, Washington; Henry Havelock Pierce, Boston; S. L. Stein, Milwaukee; J. A. McCormick, Seattle; Frank Scott Clark, Detroit; William L. Koehne, Chicago; E. Goldensky, Philadelphia; President, B. J. Falk, New York; and W. Rau, Secretary and Treasurer. I would like Mr. Goldensky to say a word or two about the value and importance of the Copyright League.

Mr. Goldensky: We have made great changes for the benefit of the photographers in the last Congress, by which we will all greatly benefit in years to come. We represent in this country a body of men and grand factors in the progress of civilization. Our occupation is such an instrumental responsibility for the uplift of the mental development as well as the industrial success of this and other countries. We have in our hands a power to demand acknowledgment and protection by the mere fact that among other incidental conditions we have in our hands the gun and the cartridge that can arrest a certain event of life. It is of tremendous importance in civilization and the history of the country that we are fortunate enough to be instrumental and responsible for it and think the law acknowledged it and gives us certain privileges for it. The copyrighting of photographs is not understood as it should be by photographers. Very likely it is due to the fact that it is rather complicated; when a man gets a record of some event with a photograph that he wants to protect, by the time he gets that protection the interest is somewhat lost in most cases in photography. Now, since the Copyright League has recognized and has on the board as useful and energetic men as the Secretary and Treasurer, Mr. Rau, of Philadelphia, and as earnest a worker as Ben Falk, of New York, you can be assured of all the legal and moral support if you will coöperate with this movement, and it will considerably lessen the difficulties of obtaining copyright protection. All that you have to do is to send a dollar, or be kind enough to get out those who are interested and want to become members of the League, and then in case you get yourself in trouble through copyright complications you will have a body of governing board that will take interest in you and put it and help you out and protect your rights. And besides this you will get all the forms, receipts, etc., that are necessary, together with transfers, so that in case you have a copyright privilege, in case some one wishes to buy it or purchase it from you, you will have legal blanks, and all you have to do is to fill out your name and the party to whom you transfer the copyright, and that binds it as a legal document, and you have no further troubles on this, and it is only due to the fact of the energy of you men that spend your life to give us something that we are by force of circumstances to have the right of possession. Now, the membership fee is only one dollar, and Mr. Rau is the man who will take your subscription, if the chair has no objections to it, and anyone who pays us a dollar in the treasury receives all the blanks and contracts sufficient to obtain the privileges of copyright and transfer. I thank you.

Mr. Stein: I would like to just add a few words to this business. It is nothing of the kind. You get blanks furnished which you can send in with your picture to the Librarian of Congress, and all it costs is fifty cents, and if you pay a dollar they will send you a certificate back showing that this protects, although it is just as well protected without the certificate. Some of you, maybe, never use a copyright,

but if you get occasion once in a while to get somebody of prominence whom the magazines, journals, or the newspapers want, they will pay you any sum for the publication of that picture. They have got to have it, and when they don't pay it, you have the easiest thing in the world; if they go to work and ignore your copyright and publish it, you send down to New York to the President and tell him all about it, that the copyright has been infringed on by so and so, and they at once take hold of it. They have an attorney who is versed in this, and he will go to work and take it off your hands, and you have nothing more to do with it, and inside of no time he brings these parties to time and they pay whatever is called for. There is no "settlement" made. Only recently I had trouble with the *Ladies' Home Journal*, who copied one of my pictures. Seven days from the time I sent my matter in the thing had been settled; they paid the whole price, lacking 25 per cent. for their work, and I got 75 per cent. out of the proceeds; so that one instance only will pay for many, many years dues, which is just a nominal sum. I recovered $250. Originally they could have had it for a small sum if they had asked for it.

President: Do I understand you got $250?

Mr. Stein: I got $250. I hope you will all go to work and sign up.

President: I would like to say a word on that line. We in Washington copyrighted over 700 pictures last year, just to keep track of everything that we did, and if you photograph your Governor or anybody of any prominence in your town or State, and some day they might get prominent, if you join this League it shows you the way to do it, and when the time arrives you don't have to write to Washington or somewhere else to find out how to do it. You have got what the boy on the street calls the "dope" for doing it right in your drawer, ready to do the thing. I would advise every man and woman who are photographers here to see Mr. Rau on this proposition.

Secretary Tyree: Another thing. I have no doubt but what many of the members of this Association have received very subtle, flattering letters from the magazines and newspapers, asking for a contract to cover pictures, covering everything that you may make, say for 1912. You want to be very careful about that, because they flatter you very much and make you think that it is an honor for them to use your pictures and give you credit for it. I have received many of these letters, and I have no doubt many others have also received them.

President: I would like now to appoint the committees. Committee for Selection of Next Place of Meeting: L. B. Jones, New York; Fred Hammer, Missouri; Will Towles, D. C.; Mr. Goodheart, Georgia, and R. C. Nelson, Nebraska.

President: I would say to that committee that I have a lot of matter relating to the next place of meeting, communications from those who invite us to places next year, and I wish they would take charge of these letters.

The next committee is the Resolutions Committee: Mr. Stein, Wisconsin; Mr. Hollsinger, Virginia; Mr. Golling, Minnesota; Mr. Rice, California; and Mr. Hoyt, New York.

Nominating Committee: Mr. Lewis, Ohio; Mr. Proctor, West Virginia; Mr. Medlar, Iowa; Mr. Holloway, Indiana; and Mr. Harden, Kansas.

In my committees I have tried to cover the whole country, and not to have any two members from any particular locality.

I wish to announce that we have Mr. Allen Williams on the program for

tonight also, but I have just received a cablegram from Mr. Williams that he had a very serious operation on his ear last month, and he had to have another one last week. It has stopped his trip to this country. He tells me that he is very sorry and wishes to be—not kindly remembered, but something to that effect—to the Convention. I am more than sorry about this, because he is one of the most brilliant men I have ever talked to.

I think all the business is through for the morning, unless some one has something for the good of the Association. We are anxious to make this Copyright League stronger, and when Mr. Rau is through with his lecture, and anyone of you want to join the League, come forward and give your names and get your application blanks from Mr. Rau.

Mr. E. B. Core: I would like to enter a plea for the great advantages of organization. Some might be led to wonder why they should contribute a dollar, and perhaps they won't have to use the service of the League, or even copyright pictures, but we have had a very strong illustration of the advantage of organization in the State of New York, and now we have a very strenuous law on the statute books in regard to exhibition of pictures. Even in your own place, you are liable to be arrested and not only fined for damages, but are also liable to imprisonment, because it is a misdemeanor to exhibit anyone's picture in a showcase, or on the street, without their permission. They don't even have to notify you that the exhibition of such picture was obnoxious, but they can begin a suit, and in that way it was an additional menace. We got it through both houses, and it was vetoed by the Governor, and owing to the persistence of one man and our organization we had it passed again and now the Governor has signed it, and we are free from this—all due to the fact of organization. A little dollar spent once in a while is a great protection in the long run.

President: I am sorry that dear old Papa Core was not here yesterday. We made all our officers get up here yesterday, and we will make you get up here tomorrow.

There will be recommended a change in the Constitution tomorrow, and perhaps we ought to have it read today. We will have to read it before we introduce the next paper.

Mr. Lewis: A part of this is recommended by the Congress for adoption, but it does not necessarily imply that it has got to be inserted in the Constitution, or that the Constitution has to be changed in any part, but a part of it can. I will read it:

"The incoming president should be allowed $100 to pay for a stenographer and typewriter during his term of office. He would have, then, no excuse for neglecting the correspondence of the Association.

"The first vice-president should be allowed the same amount for a like purpose.

"The second vice-president has been designated of late years as the gatherer of advertising for the Annual. I think 5 per cent. of the amount that he collects from this source for the Annual should go to him as a just reward for the hard work that he does. The advantages of such an arrangement are too obvious to require discussion among business men.

"The secretary should receive 5 per cent. of the total for all floor, wall, and desk spaces that he sells, or on any other earnings that he makes for the Association, exclusive of membership and Annual."

You will notice that some of this would necessitate some alterations to the Constitution, and others would

necessitate inserting new clauses, while other parts can be passed on without any reference whatsoever. I think everyone understands it well now.

### Thursday Morning Session

President: The meeting will come to order.

Mr. Bucklin (Boston, Mass.): This question was brought up before the Professional Photographers' Association of New England: "Shall we maintain the old style size ($4\frac{1}{4}$ by $6\frac{1}{2}$), or shall we adopt the larger size (8 by 11). The question comes up, shall we re-establish the album size on a new foundation, using as a card an 8 by 11, putting on that small or large pictures. This establishes a large factor as a basis of all collections, which will be standard collections, which will be in all of the smaller mounts at least? When you use a large card and they see a small picture on it they will say, That looks pretty small on that card, give me the next size larger. That gives you a chance to raise your price, because you have a larger card. The manufacturer will like this, because he will give you a new line of goods; the man who gets his collection of photographs, the ordinary, every-day man, will like it because he does not have to throw all his pictures into a box to be destroyed. The photographer will like it, because he will have less mounts of various sizes, making something more standard, and the manufacturer of cards will like it, because in the larger sizes they, of course, get more money, and the cheap men will make the odd sizes which will so differentiate them from the man who is trying to be standard in work that I think this question is well worth your consideration. I make a motion that the size 8 by 11 be adopted by this Convention as the album size to take the place of the $3\frac{7}{8}$ by $5\frac{1}{2}$.

Mr. Dyer: I second the motion.

President: Before I even recognize that motion it seems to me that that is a question to come before the Congress and not here. I don't see that we have any business to take anything like this, and I think a motion to refer it to the Congress would be more in order.

Mr. Leschinsky: I move you that it be referred to the Congress, as a substitute motion. Motion seconded and carried.

President: I think Mr. Lewis is ready to present the matter which was adopted by the Congress, and we will hear from him.

Mr. Lewis: Mr. President, Ladies, and Gentlemen: Yesterday you heard the first reading of this proposed amendment to the Constitution by the insertion of a clause "that a line through the United States running north and south, dividing the country into a western division and an eastern division, so that a convention city could be chosen on alternate years, first on the east side and the next year on the west side of that line."

Mr. Holliday: I move that we adopt the recommendation of the Congress.

Mr. Boss: I second the motion.

Mr. Croft: I think the dividing of the United States into two factions by establishing a line is not a good thing for the Association in a general way. While the object of the line being drawn is to alternate the places of the convention meetings from the East to the West, giving all the members of the Association and all the photographers in the country an opportunity to attend where it will be within means of the pocketbook to attend, the establishment of that line where it is proposed, or establishing the line at

any one place, and especially as it is proposed, is undue and unfair.

President: I beg pardon, we are not discussing where that line will be. We are discussing whether we have a line or not.

Mr. Croft: Where the line is drawn is immaterial. The line being drawn would be a division of the United States into two factions, and when we adopt that line you will have an Eastern and a Western association. We do not want a division of the Association; we want it to remain as it is. When you establish a line you divide that east and west. It is also proposed that when the Convention is held east of the line the State associations would disband and would attend the National in a body, and when the Association would be west of that line the State associations in that section would disband again. That would make it a hardship. When you establish a line, regardless of where it is, it is not right. When that line is in the West, as it is, we have, according to this line, I consider eight States in our end that have been eliminated, with one-tenth of the photographic population of the United States; they have been eliminated in considering this line. It seems to me that they should have an opportunity of being represented as well as any State in the East. The conventions for twenty-seven years have been held on the Mississippi River, or east of that, which is within reach of the photographers in the eastern half of the United States. Those in the West have not had an opportunity of having the Convention within reach so that enough of them have been able to attend and be fairly represented. When the Convention goes East year in and year out, which it has for twenty-seven years, we have had it two years west of the Mississippi River. Now the Eastern photographers want to bring this back East, as they call it. Those in the West consider this east, the same as those in the East consider this away west, and for that reason the extreme eastern photographers are not attending this Convention as they have in the past. They are disbanding, or not considering coming here, but to go to the New England or New York or larger Western conventions instead. Why not plan for the Convention to take place where it is convenient for all?

President: Talk to the question. You are talking about where that line should be, and not on the line. Please confine your remarks to whether we shall adopt the line or not, and not where that line shall be drawn.

Mr. Croft: When you establish a line, regardless of where it is made, you have a division of the two factions and create a faction. It may not be convenient for the Convention to be held alternately from one year to another; there may something come up that it would be policy to hold a convention twice east or twice west of that line, wherever it might be drawn, and when the Convention should come up against that proposition, you have it in your Constitution. Then comes the problem, again, of changing the Constitution. That line, to my mind, is a bad proceeding, wherever it might be placed, and the boys I believe in the West will join with me that it is an injustice to them as it has been proposed, or as it may be proposed.

Mr. Zwifel: In reply to that I will say that I look at that from an altogether different view, and I believe the drawing of the line will bring the two factions together. As it is now, it makes a faction, and the sooner we get rid of that faction the better, and I think the drawing of the line will eliminate that.

Mr. Holliday: Mr. President, I cannot help but disagree with the member

on the other side, and in my opinion, and this I am judging by observation upon the attendance of the conventions in the past—and I have not missed but one or two in a long time—I don't think that any State association will disband on account of its being either East or West, so-called. Only the local association, such as you have right here. I have never noticed it anywhere. This has no intention and should not have the effect of disbanding any State association. That is up to them entirely; if they want to do it that is their business and not the National. The sole purpose, aim, and object of this movement is to bring the National together, united, more solid than it has ever been before, and raise it higher and higher each year, as we go along. There is no other aim and object of any member here, I think, but to uplift the association and carry it forward as high as we can. We will eliminate any faction, any fight, among us. It is a prearranged thing that we go to one section one year and another section the next year. In the Western section it is up to the Western boys to decide where they want it. If they want it away west, it is there; they have the opportunity of carrying it away west if they want. I cannot see but for the good of the Association this is a good thing.

Mr. Holsinger: Mr. President, Ladies, and Gentlemen: I fail to see where there could be any objections raised to the establishment of a line. It is done in a spirit of fairness to all members, and to obviate all danger of any division of the Photographers' Association, and as long as this line has not been mentioned on the floor this morning, I fail to see why any man could object to the establishment of that line. If we were passing upon the line, then I can see where a gentleman on the other side might have something to say, that we came too far east. That is not before the house, and I call for the original question.

Mr. Boss: I was going to move that we stop discussion and proceed to take a vote.

Mr. Holloway: If all of you would eliminate from your minds the section idea, for your own individual interest; in other words, I wish you would look upon this in a broad light, not for your interest for your section, nor where it will be handier for you to come to the Convention, but for the good of the Association. I will tell you, my friends, that I have been on the Board, and I know, in the year of the Convention in Boston, there was one man came from the Pacific coast up to the Treasurer's office and paid his five dollars besides his initiation fee, besides the many hundred dollars it cost him to come there, and there was a man from out fifteen miles came on a street car, who objected to paying his initiation. That man from the East looked upon it from a selfish point of view, and the man from the West looked upon it for the good of the Association. That is the way we must look upon this matter. I would like to have it in Indianapolis, but I will go to the end of the world if I can dig up the money. I would go to Toronto, San Francisco, or any place, for the good of the Association. That ought to be looked at in that light. Unfortunately, we are looking at it from the way it affects us individually for the present. I venture to say that if this Convention was held at this spot six years, many of these fellows would put off attending it until another year. They would all say, I have been there, I don't want to go there; a new place, and entirely new conditions is what catch us, and I want to say to you one more word—it is only those who

are really interested in the welfare of the Association that go to the Association year after year, and I wish, my friends, you would look upon it in that light. This matter has been brought up for the good of the Photographers' Association of America, as some of the gentlemen on the other side of the floor have said.

Mr. Lewis: Our friend from the West cited the factional idea. Now, how can you men so misinterpret the efforts that have been made along this line for so many years, trying to do away with that same thing. He states it as establishing a faction. It is just the opposite, and is to do away with the faction.

President: The question is called for again. Remember now, we are only voting as to whether we shall have a line or not; the idea is to have the Convention each year across that line; no two years in succession along one side of that line. Motion carried by rising vote.

President: I am sorry that we will have to close this meeting. It is now half-past eleven. The Women's Federation lecture begins at 11.30, and I see nothing but to postpone this meeting until later.

Mr. Holliday: It takes but a few moments to get the next, and I move you, sir, we extend this session at least ten minutes longer.

Mr. Leschinsky: I move you that we substitute, that we adjourn and not interfere with the ladies. Motion seconded and carried.

Mr. Holliday: I move that we adjourn until this afternoon at 3.30. Motion seconded and carried.

President: At 4.30 this afternoon, in the room to the right going out, the Treasurer will meet with all the officers of the State societies. At two o'clock this afternoon the school will be conducted under Prof. Dührkoop and Miss Dührkoop. At eight o'clock the illustrated lecture by Mr. Leslie Miller, of Philadelphia, will be given, and I will guarantee you that we have never heard, up to this week's meetings, a better lecture on Art in your life. We have, no doubt, the best lecturer of the kind in America to hear this evening. It is different from any other line that we have heard, and I hope you will be here on time tonight. After the lecture we will have an impromptu dance, as we had last night. The boat ride for the ladies begins at 10.30 at the foot of Jackson Street.

### Thursday Afternoon Session

President: We will call the meeting to order, and take up some of the matters that have been recommended by the Congress,

Mr. Ackerman: The Congress has considered (reading):

### *Amendment to the Constitution and By-Laws of the P. A. of A., Providing for the Appointment of a New Standing Committee*

As a practical recognition of the services rendered the P. A. of A. by our distinguished fellow worker from Germany brings to us still greater evidence of the existence of an international fraternity among photographic people and a cordial relationship between the earnest workers of all nations,

*Be it Resolved*, 1. That the Photographers' Association of America, in convention assembled, does hereby create a new standing committee to be known as the Commission of Foreign Affairs.

2. This Commission shall consist of three members to be appointed forthwith by the chair, the first appointed member to hold office for three years; the second, two years; and the third

one year. Thereafter one member shall be appointed by each succeeding president for the full three-year period, so that there shall at all times be experienced members of the Commission in office.

3. The duties of the Commission shall be to correspond with photographic organizations and people all over the world, with a view to the betterment of the members of the Association, to establish reciprocal relations between photographic interests everywhere, and to furnish an annual detailed report.

4. The Commission shall serve without compensation, but shall be reimbursed for such incidental expenses as are incurred for stationery and postage, and the Treasurer is hereby authorized to pay such vouchers after proper audit; providing, however, that such expenditures shall not exceed the sum of $10 per annum.

5. All portions of the Constitution and By-laws of the Association in conflict with these provisions are hereby repealed.

*Amendment Introduced by Carl E. Ackerman*

I now move you, sir, the passage of this amendment. Motion seconded.

Mr. Reuvers: An amendment to the Constitution will have to be laid over until the next meeting.

President: I don't consider it as such, as it is only the matter of adding another to our other standing committees. Motion carried.

President: We will now take up the matter of the Tariff Commission, which was adopted by the Congress. Mr. Holsinger, will you present that?

Mr. Holsinger (reading):

*Whereas*, The United States Congress is soon to consider the revision of the Payne-Aldrich Tariff Bill; be it

*Resolved*, That this Congress recommend that the National Association appoint a committee of five whose duty it shall be to get in touch with the Tariff Commission and Congress and see that our interests are properly protected from an excessive tariff or too low a tariff.

Now, there is no class legislation in that. We photographers are the consumers of the photographic material and apparatus, and therefore it is no more than right that we are represented, or heard, at least, when this matter is considered, as it no doubt will be. I have nothing to say in regard to the tariff today, but I do think that we should go on record before the public as having enough enterprise and ability to take care of our own interests, as the other organizations do. Think of the farmers, how they came forward when the reciprocity bill came up, how they blocked the amendment for their own benefit. I think we ought to have a voice on photographic apparatus and materials of all kinds. I move that we adopt this resolution. Motion seconded.

Mr. Core: Considering this matter, there are two or three things that also should be taken into consideration. It is all very well to appoint a committee to look after this, but I want you to understand that it takes money. If you are willing to spend the money, I don't know of any better cause in which you can spend it, perhaps, but you must make up your mind that it is going to cost some money. That does not mean that this committee can stay in their homes and write a few letters to a few men in Washington, and have them recognized, but it means somebody must be on the spot, it means a legal mind, and a paid lawyer, or somebody who can give their legal advice. Now I have no particular objection to this motion. I

don't know but what it is a very good thing, but you must make up your mind that it is going to cost some money.

Mr. Holsinger: I would say that I realize that it requires much work and it is necessary to employ legal talent and have somebody on the ground at all times, and I doubt if we have the money to do that at this time, and since the tariff commission are men whom we cannot reach with money, men who will take this matter up on the merits, and consider it fairly, all they will need is facts, in plain figures, and this committee can urge to these commissioners and lay the matter before them, and any officer or committee which has the power of delegation from this Association will have as much influence before that commission as a man with a pocket full of money. I know one man personally, who is a personal friend of mine, and there is not enough money in the United States to bribe him.

Mr. Sellers: What is the object of taking advantage of this resolution?

Mr. Holsinger: We are not trying to take advantage of anybody. We just want fair play, and to see that no one takes advantage of us. The resolution says: "Looking after the interests and protect us against too high or too low a tariff." I think it is just as necessary that we are protected against a lot of trash coming into this country as we are to be protected from too high a tariff.

Mr. Holsinger: This particular tariff is not to keep photographs out of this country at all—it is a duty on arts, and not photographs. Now this duty is on photographic apparatus and materials. All I want is a voice in this matter. You asked me what good we could derive from it. I will ask you, What harm could we derive from a committee like this to look after our interests? No strings are attached to it, or anything else. Where can the Association be harmed by a committee of five to look after our interests and lay the matter before the tariff commission?

Mr. Ackerman: Gentlemen, the appointment of this committee comes to you recommended by your Congress. The advisability of appointing a committee of investigation to report to you was fully threshed out. To go over the same ground here is useless. The appointment of this commission certainly can do no harm, and may result in great good, and I therefore call for the question.

Mr. Sellers: I beg leave to inform the brother that I never saw a man big enough in my life to think for me, and I don't want the man to think that I am not big enough and have to have another man to think for me, and if this Congress thinks they have to think for me, they are mistaken. I will think for myself. If that is all we are going to do, to hear the report of the committee, to think for us, I can make more money in Muncie.

Mr. Ackerman: I am not very much interested in the mental processes of the gentleman from Indiana, but I assure him that this commission was advised by the Congress, in the full belief that it would do the Association good. Does the member understand that it is a committee to investigate the conditions surrounding the tariff on photographic manufactured articles? This commission or committee cannot act at length, it cannot change the law; it can only investigate and report and advise with the Association or commission and report back to the organization.

Mr. Sellers: May I ask the member one question?

President: I think that the discussion is getting too personal.

Mr. Sellers: It is not personal with me at all, because I think just as much of the brother now as I ever did in my life. Here is a bit of information I want, and there is nothing personal to it. Is it understood when the Congress acts upon it, that is the finality of it?

Mr. Ackerman: Why has it been brought up here?

Mr. Sellers: That is the point.

Motion carried.

Mr. Ackerman: I will now ask for the consideration of a resolution introduced and passed at the Congress yesterday afternoon covering the admission to membership of editors of photographic publications. The substance of this recommendation was to the effect that certain words which now permit photographic editors to become active members be stricken out—that we strike from Article III, Section 1, the words "and editors of bona fide professional photographic magazines (trade organs excepted)."

In moving the adoption of this, I desire to ask that my remarks at the Congress at that time, be printed in the minutes of the Association.

With the words stricken out, the section would then read as follows:

"Sec. 1. The active members of the Association shall be owners, part owners, or managers of studios—active members in good standing of State Associations paying the per capita tax provided for in Article IV, Section 1—and such photographers, owners, part owners, or managers of photographic studios . . . not members of affiliated State organizations who shall pay the initiation fee and annual dues provided for in Article V, Section 1."

Mr. Ackerman's remarks at the Congress:

"Mr. Ackerman: Speaking for the Photographers' Association of New England, I desire for the sake of the record to express the sentiment of the President of the Association, and in doing so I may inject a few remarks which represent my own personal views upon the matter. These views you will please permit me to make in spite of the ruling of the chair that no speeches were to be made. The President of the New England Association, in a discussion, or rather in giving me my instructions, conveyed to me very strongly the idea that a photographers' organization of the size and scope of the present national organization should be comprised of professional photographers only. In doing this, Mr. Garo, in my opinion, has voiced the sentiments and opinions of every professional photographer now a member of the New England Association. It is not within the province of an organization comprised of men in one line to admit within its ranks men in another line. The profession of photographic journalism, as I understand it, or journalism in its broadest sense, constitutes an entirely different phase of operation, an operation which characterizes a meeting of men engaged in working for their living in an entirely separate and distinctive field.

"I wish to explain to you now at this time the relationship which exists between the press and members of the press and the organization which you have at this time in session. The press is the sponser for many things; it is the censor for many things; it stands as a guardian not for the things which you may do or the things which you may not do, but for the things which are embraced in and which you act for as the representatives of all the photographers of the nation, and certainly, quoting Mr. Garo, newspaper men, press men, or magazine men are not qualified for membership in your organization. They are not qualified for membership in the Congress be-

cause the things which you do here they may have to criticise. The photographic journalistic field is a narrow field, and if you get them all here working with you, what protection have the members got who are represented here? Who shall criticise? Who shall stand guard for the men outside? (Applause.) No one. Motion seconded."

Mr. Dozer: In explanation. At the present time, editors of bona fide photographic magazines and publications can, on payment of dues, become active members, which entitles them to all the privileges of the Association, including the right to hold office. Now then, by the elimination of these words in the Constitution, these men are not members at all. If we make them associate members of the Association, they have no right to the floor, no right of ballot. They are on the same footing as the representative of a manufacturing concern or a dealer. Now, we want to hear from these editors. There are men among us that we are glad to hear from; we want them to take part in our meetings. I think it would be a mistake to make them associate members, so that they will have no part in our meetings, and yet I think it is wrong to make them active members of our Association, so I think by eliminating these things—and another thing, we can give these men the privileges of the Convention, by giving them buttons free of cost, and if they want to talk on the floor it is up to the chair whether we want to hear from them or not; but I think we should not give them all the privileges.

Mr. Golling: I think in handling this question we ought to have a full representation of the editors, and unfortunately one of the best workers among the editors is not with us this year. I would like to refer this motion for the next year, and have it laid on the table until next year.

President: For your information, I am glad to inform you that Mr. Abel, one of the editors that you are talking about, is fully agreed with this proposition, to remove this part of the paragraph from this article or section, and move it to another one, and I think that would be a better way, Mr. Delegate from New England, would be to put this in shape so that we can carry it to another paragraph if you wish.

Mr. Ackerman: This will necessitate another amendment to the Constitution, which will have to be acted upon tomorrow, and the whole day tomorrow, as I understand it, is pretty well crowded. It would not do the editors any harm to remain out in the cold, cold world one year. Motion carried.

President: The editors have no membership in our Association at this time.

We are now ready for you to give us the dividing line proposition, Mr. Lewis.

Mr. Lewis: The suggestion made by the President yesterday—before you at a former session—passed upon by the Congress unanimously, suggests that the line, as you saw it on the map the other day, as given here in this copy, which is:

"I think the Mississippi River should be followed northward to the Ohio River; thence along the Ohio River to the Indiana-Ohio State line; thence to the Ohio-Michigan State line; thence along that line to the Great Lakes.

"That leaves the West with the following States: Arkansas, Colorado. Iowa, Illinois, Indiana, Kansas, one-half of Louisiana, Michigan, Minnesota, Montana, Missouri, Nebraska, New Mexico, North Dakota, Oklahoma, South Dakota, Texas, Wiscon-

sin, and Wyoming—18½ States, with a total of 6135 photographers and twelve large cities.

"In the East we have the States of Alabama, Connecticut, Delaware, District of Columbia, Florida, Georgia, Kentucky, one-half of Louisiana, Maine, Maryland, Massachusetts, Mississippi, New Hampshire, New Jersey, New York, North Carolina, Ohio, Pennsylvania, Rhode Island, South Carolina, Tennessee, Vermont, Virginia, West Virginia—23½ states with 6395 photographers and twenty-two large cities."

Mr. Holsinger: I move the adoption of the line as proposed. Seconded and carried unanimously.

President: It is carried unanimously. That will take effect immediately. I would like to instruct the committee on selection of location to go to work so that they can report in the morning, and to take this line into consideration.

The next suggestion as proposed by the Congress, Mr. Lewis.

Mr. Lewis: This particular suggestion it is proposed to be put in the form of a resolution, to become active and remain active until rescinded at some other time, and does not necessarily call for an amendment to the Constitution at all, as the matters stated in this are not constitutional matters.

"The incoming President should be allowed $100 to pay for a stenographer and typewriter during his term of office. He would have then no excuse for neglecting the correspondence of the Association.

"The First Vice-President should be allowed the same amount for a like purpose.

"The Second Vice-President has been designated of late years as the gatherer of advertising for the Annual. I think that 5 per cent. of the amount collected from this source for the Annual should go to whoever makes the collection, as a just reward for the hard work he does. The advantages of such an arrangement are too obvious to require discussion among business men.

"The Secretary should receive 5 per cent. of the total for all floor, wall, and desk spaces that he sells, or on any other earnings that he makes for the Association, exclusive of membership and Annual."

President: We changed that a little bit. We did not use the word "Annual" in the second place, and left it open to the Board to decide whether the Vice-President or the Secretary should do that.

Mr. Lewis: Mr. Harris' correction there was with reference to this matter when we were considering it as a constitutional matter. Later, I decided that without a great deal of change and ripping up things it was going to become a constitutional matter, and therefore we presented it as a resolution, and I read it as the Annual, which originated a few years ago and has never become a matter of the constitution at all. Therefore I presented this matter and included the Annual in this resolution.

Mr. Sykes: I move the adoption of the resolution.

Mr. Rau: I second it. Carried.

Mr. Lewis: Another resolution that was to be submitted to you, which was passed unanimously by the Congress, is the Treasurer:

"The Treasurer should continue to receive the same as he is allowed at this time."

Now this:

"The Treasurer is obliged, five or six times a year, to address envelopes to the members of our organization. I recommend for his use the purchase of an addressing machine as a time, labor, and money saver."

Mr. Townsend: I move the resolution be adopted and the Treasurer be

requested to purchase the machine. Seconded and carried.

Mr. Fish: Does that resolution carry that the addressing machine becomes the property of the Association?

President: There would be no question about that.

Secretary: It is so considered, without question.

Mr. Holliday: Some one has asked me—some members have been able to buy round-trip tickets up here and back and some have not. Can we gain any information whether we will get any reduction on the return trip, with a certificate? The agent would not sell me a round trip; said he had no information in any way, shape, or form. I got a certificate.

Mr. Harris: We are in a part of the country where most of the States have a two-cent fare, and the railway association in this particular part would not give us any rates unless we guaranteed one thousand people; that is, one thousand return tickets. We have never been able to reach, since I have been on the Board, more than six hundred, not even in Rochester, because so many people came from within the State of New York and consequently do not travel on round-trip tickets; they travel on mileage, and things of that sort, and it was no use to tell the members if you would buy a round-trip ticket you could get one-third off; we knew better than to guarantee anyone that we could get a thousand, consequently we are sorry to say that we could not make any arrangements with the railroad companies to give you any rates.

Mr. Sellers: There is one thing that is absolutely wrong; in our annual conventions we are not treating the women right. Last year we had one of the women to address the convention, who only had a few minutes, and this morning the lady had only a small attendance, and she never did half justice to her subject on that account, and I think, in all due respect to the women who are laboring very hard and assisting the convention, that we ought to honor them very much, and respect them enough to give them ample time to deliver their lecture, because they work hard. The lectures are usually good and instructive, and the way it was last year in Milwaukee, and this year—it is always twelve or one o'clock, and then half-past one, and the members always drift out, and I think we ought in the future to try, even if we have to adjourn without doing any business at all and meet as we do this afternoon, to give these women a chance. (Applause.)

President: I was ashamed of myself and of every member who was not present. It was a wonderful lecture. The reason I could not be here was that we were having that trouble on the floor. When I got back there was about one-third of the members that there are here now, and still it was a good lecture. Perhaps there was a mistaken idea that the men could not attend, but I advertised the fact that this was as much for the men as it was for the women. Perhaps next year we can fix it up in a better way. We adjourned this morning at exactly half-past eleven, and gave the meeting over, because I took a vote on the proposition.

Mr. Sellers: She ought to have at least three-quarters of an hour.

President: She had an hour.

Mr. Holloway: I wanted to hear that lecture very much this morning, and the meeting was closed, and we shut off business here; we closed, although we had business to transact, and the lady did not speak when her time came; there was other business came up which kept the speaker from speaking, and it was not the Association's fault at all.

President: I know we closed at exactly half-past eleven, and she had five minutes then to get ready.

Mr. Koehne: I don't know that this is the right place to bring this matter up and make a resolution, but Mr. Dührkoop was in the city of Chicago a few days ago, and was honored by quite a good deal of newspaper notoriety. The papers seemed to fall over each other to come to him and interview him, and get great big cuts about him and his work, and write a great deal of nonsense that he never said, and misquoted him very seriously. When a foreigner comes to this country and criticises anything in this country, it gives the newspapers a chance, and the American press took up this question and quoted Mr. Dührkoop, in all the large cities, entirely different from what he said. He did not mean one word of criticism, but the newspapers quoted him as saying that the American ladies did not know how to pose, and the newspapers went to the photographers and quoted each one. Now then, these two gentlemen that were quoted as having been interviewed were here in St. Paul, and they were never interviewed by any reporters. The whole thing is a fabrication, and I am sure that there is nobody feels that more than Mr. Dührkoop himself. He did not ask me to say this, but I felt that I should assure you all that Mr. Dührkoop never said or meant any word of criticism toward the American women and toward the American photographers. He is a man that loves them both more than anyone can express. He admires everything in this country, and I am sorry that it happened.

Mr. Lewis: I think it a most excellent opportunity for our trade journals and photographic magazines to see to it that we photographers at least are well informed of what Mr. Koehne has told us, that we can set right as far as the photographers are concerned; the outsiders would not make so much difference, and I hope the journals will take this opportunity of making public the statement that Mr. Koehne has made.

Mr. Sykes: I wish to say that I was one of the men supposed to have been interviewed in regard to Mr. Dührkoop, and I would say that I was in St. Paul at the time the interview was supposed to have taken place.

President: I don't think anybody takes the American newspaper seriously on interviews. I was interviewed three times, and out of the three times I was quoted wrong twice.

Tomorrow morning at nine o'clock we have, I think, Mr. Larrimer told me, the last session of the Congress of Photography. Don't forget that. At ten, of course, is the regular meeting again and the selection of place of meeting and election of officers. We must stop this meeting at twelve o'clock tomorrow, because at one o'clock we leave for a trip through St. Paul and Minneapolis.

We have on the program tomorrow the presentation of the past president's life membership to Mr. Proctor, but he is called away tonight, so it will be done at this time.

Papa Core will now present to dear old Proctor his life membership.

Mr. Core: I feel very much like the Mayor of Detroit, when I introduced him to the Convention, and he welcomed us to Detroit, who said I must be an Irishman, that I threw a blanket over his whole talk and I introduced him in such a way that he never could live up to the reputation. I think that is the trouble with our good President, Mr. Harris. But I have a pleasant duty to perform, and I always like to do a pleasant duty, and I was afraid a while ago that I would have to talk

to empty benches, but am glad to see that there is a string of faces on these seats. We have all, I suppose, or many of us, travelled over the rough mountains of Virginia, and we have noticed that the vegetation was composed mostly of timber that could hardly be used for anything, and flowers seemed few and far between, but I do want to say that she has produced one flower in photography which is worthy of our deepest respect and our heartiest consideration. I am sure I voice the sentiments of everyone present when I say that we all honor ourselves in honoring him and placing him in the category of life member of this Association. I feel that I voice this as a member of the Association, and as a member of the life membership class I take pleasure in honoring him to the midst of the "has beens." (Applause.)

Mr. Proctor: My friends, you know it is a joke to ask me to make a speech, because I have attempted so often and fallen down that I know it is useless to try. But seriously, in accepting this I feel that it is an incentive to me to try and do better as I get older, and as the years pass by. If what I have ever done for this Association has been of any good to the members, I assure you that it has been the most pleasant memory of my life, and I can certainly say that all the benefits that have been showered on me by this Association have doubly paid me for any effort that I have put forth to try and help the good work along. I kindly thank you for this and all other courtesies of this Association, and I assure you that my heart and soul will always be in this work for the good of the old P. A. of A. I thank you. (Applause.)

### Friday Morning Session

President: I will first ask if there are any communications from the Secretary. (Secretary reads communication from Frank W. Tracy.)

Mr. Core: You have heard me say a few words on the value of organization, and my heart swells with pride as I look around here and see this congregation of intelligent, bright faces that have been called together for this great cause, Photography. I feel that we have hearts full of thanks for this great Convention, and we have hearts full of gratitude to the executive officers, all of them, and particularly have we the thanks, with hearts full, to this President who has presided over us and steered this craft of state so safely into this grand harbor of a beautiful grand Convention, and many of us that I see here have known this President in his photographic swaddling clothes; we have watched his growth to a photographic manhood; we have felt his growth in our estimation and respect. We have welcomed his love in our hearts, and it is my pleasant privilege today to give a small token of a material evidence of our appreciation, love, and esteem. In behalf of the Association I take great pleasure in presenting this beautiful cup. (Applause.) May this bowl hold pleasant memories of good cheer, and may its polished surfaces ever reflect bright scenes and pleasant thoughts all through his life. And now I want to say a word for the ladies, and I am going to get real fatherly and confidential, and I am going to say "girls." They love you, and have just said so; and I know you all do. You love him, no matter what kind of clothes he wears. We would love him if he was a little Johnson running around. But have you ever seen him in a dress suit? We have seen him in a dress suit among the chivalry and beauty of New York City, where every girl felt that he was a "dream," and wished that she might put her arms around him and tell him so. But there

he stood, as pale as marble and as beautiful as Adonis, and would not allow one of them to touch him. (He had a boil on the back of his neck.) (Laughter.)

Mr. Harris: The only thing I can say concerning this is I hope everyone of you will come to Washington some day, and when you are down I will try and fill it up and see if we can empty it together. I thank everyone of you for this. It is beautiful, and I shall be very glad—and I know my good wife will—to take care of it and put it in the best possible place in our home. I shall remember everyone of you by looking at it, although I do not need such a thing. I don't know whether I can say it in the same way, but Papa Core says you all love me. You cannot possibly love me more than I love everyone of you. I have done my best with my Board to make this a successful convention, and I am a whole lot like George Holloway right now; George said he would never quit, and I don't think I will ever; I am going to fight George until I die; he and I cannot agree in anything, and we cannot agree from now on; that means that I am going to fight just as hard for the success of this Association from now on as I have. I thank you.

President: We will have now the report of the Committee on Resolutions:

Mr. Stein: Mr. President (reads):

*Report of the Committee on Resolutions*

We, your Committee on Resolutions, present this as our report and ask the adoption of the several recommendations by rising vote.

The Photographers' Association of America, assembled for its Thirty-first Annual Convention, desires to express its deep-felt thanks to all who have contributed to the success of the gathering. We have appreciated to the fullest extent the courtesies extended to the Association and its members, and acknowledge our lasting indebtedness to the hard-working men who have expended time and effort in arranging the details of the Convention.

Especially does the Association thank the Twin City photographers' entertainment committee, which is composed of manufacturers, local dealers, and Twin City photographers, for its forethought, its uniform consideration for the wishes of the members, the wonderfully pleasant time it has given to every visitor, its liberality and splendid exhibition of fraternal good will.

We express our unbounded admiration for and appreciation of the newly elected fellow, His Excellency, the Governor of Minnesota, the Honorable A. O. Eberhart, and in the same terms the Reverend G. L. Morrill, both of whom brought to the Convention the good wishes of the State and municipality which have entertained us so well.

To the City Fathers of St. Paul and Minneapolis we extend our congratulations upon the beauties of the Twins and the hospitality of the citizenship. Seldom has the Association met with such a comfortable and delightful people.

In extending to the Association the use of the commodious armory the city of St. Paul has given to us unequalled facilities and a magnificent opportunity to properly display the pictures and the appliances of our great profession. Then we wish to tell the Armory Board and its genial members that the Association is grateful for the consideration shown it and its people. Nothing could better portray the high standing of the military organizations of our country than the consideration shown us by the Board and the individual members of the National Guard of Minnesota.

To Herr Dührkoop and Miss Saxe-Dührkoop the Committee expresses its profound admiration, and desires to place upon the records a real appreciation of the things which they have accomplished.

We also wish to record the thanks of the Association to Mr. J. C. Abel for his valuable services in preparing the material for the Annual and the aid and assistance he has rendered the President. We also express our thanks to the press.

Lastly, the Committee desires to thank the manufacturers and dealers for the splendid support given the Association by them, and also the officers of the Association, and the stenographer who has so efficiently reported our proceedings. Stein, Golling, Holsinger, Rice, and Hoyt, Committee.

Member: I move that these resolutions be accepted and spread on the minutes.

Mr. Medlar: I second the motion.

Mr. Lewis: I move that each individual mentioned in this resolution be notified to this effect.

President: That is understood; the Secretary does that anyway. Carried.

President: We will hear from the nominating committee.

Mr. Lewis: Your committee on nomination, after due consideration of all the facts and circumstances in the case of which they have any knowledge, beg to submit the following:

President, Ben Larrimer; First Vice-President, Charles Townsend; Second Vice-President, Will H. Towles; Secretary, Manly Tyree; Treasurer, L. A. Dozer.

C. G. Lewis,
A. T. Proctor,
Geo. Graham Holloway,
Frank W. Medlar,
Homer T. Harden.

President: I think the best plan would be to take up each one individually; it is the only way we can do this. What shall we do with this report?

Mr. Ackerman: I move you, Mr. President, that we accept the report of the committee as read. Seconded and carried.

President: Nominations are now open for President.

Mr. Core: Mr. President, Ladies, and Gentlemen: In view of the fact that the next convention is going to be held in that great and glorious city of brotherly love, Philadelphia, and in memory of the many pleasant times I have had there, and that spirit of the photographic profession, their open hospitality, and the many things that are worthy of our consideration, I think it is but fitting that a man from Philadelphia should grace the President's chair. I have no personal feelings of animosity toward anyone, but I have a personal feeling of great preference in some directions, and this direction in this particular instance happens to take a direcct unhesitating course toward that man who has been the head of the Pennsylvania Photographic Society for the last year, Mr. William Rau. I wish to place in nomination Mr. Rau.

Mr. Goldensky: Mr. President, it seems to me that I am a logical member to second the nomination of Mr. Rau as the President of this Association. The evolution of this Association is rather unusual and peculiar. For instance, in the history of this Association, successful as it used to be, there have been some radical changes. It seems to me that this is a time when this Association is going to take another higher step in its progress. While I am not so very old a member of this Association, I never knew to my recollection a President to be elected who was not a photog-

rapher. Mr. Rau represents the commercial photographer of America. In other words, Mr. Rau represents the commerce of the photographic industry. Everybody is a commercial photographer, but he stands ahead of all the photographers for this reason, that his photography is not only commercial but scientific. His position as a photographer is a greater honor than the portrait photographer. The portrait photographer sits in his own quarters and waits for somebody to call upon him to serve; the commercial photographer makes it possible; he goes out into the world; he brushes against conditions; he creates business. He demands evolution. He establishes a progress. He is a manufacturer of the photographic arts. Mr. Rau has done greater things, scientific things, to photography than any portraitist or any photographer, or all photographers combined. Mr. Rau has just finished a monument of his work that you gentlemen may not know about; he finished a set of lantern slides as big, I don't know, larger than I myself, larger than me and Harris together, if he spreads from one side of the table to the other. They are transparencies, I may say, in oil colors, so successfully executed that there is a monument of photography, and it will be known throughout the world and in Philadelphia as the most artistic photography that has ever been done, and come to notice. It is a remarkable credit to Mr. Rau, as well as a monument to New York, because these slides will be placed conspicuously at the new Pennsylvania Station in New York. Now, as a man, I have many friends, but I never had a friend like Rau, and I sincerely and heartily endorse him as President, and I know he will make the biggest success that has ever been, outside of Mr. Harris' administration. He will do more than anybody else ever did do. (Applause.)

President: I want to say one thing before you begin, I did not expect a speech from Mr. Goldensky. Now let us keep this to two minutes.

Mr. Rau: Mr. President, Ladies, and Gentlemen: I feel very much honored and pleased with all that has been said, but I don't think it is right for me to accept the nomination. These men have worked up, and I have not, and I have a growing business, and it is going to take an awful lot of time, and I could not serve in the chair, and I would not. I have been asked to and I refused, and I don't think it is right and fair to stand for the nomination.

President: Mr. Rau declines the nomination.

Mr. Holsinger: Is it accepted?

President: It is accepted; I accept it.

Mr. Holsinger: I move the nomination be closed.

Mr. Holloway: In view of Mr. Rau's withdrawal, I move you that the Secretary be instructed to cast the ballot of the Association for Mr. Ben Larrimer as President. Seconded and carried.

Secretary: I hereby cast the vote of this Association for Mr. Ben Larrimer for President for 1912.

President: I declare Ben Larrimer elected President of the Association for the next year. I want Mr. Core and Mr. Goldensky to bring Mr. Larrimer up here.

Mr. Larrimer: My dear friends: I appreciate the action of my friend, Mr. Rau, and I think he is as good a friend of mine as I have, and I am to him. With all that, I really believe that Mr. Rau, if he had seen fit to do so, would have made a better president than it is possible for me to do, but I will say, for your pleasure, that if this Convention goes to Philadelphia, or Toronto, or Honolulu, or Kansas

City, that Mr. Rau will be on the job to help all he can. I take that to be absolutely sure. I have no speech to make. Wherever the Convention goes, I will do my best to make good. I thank you.

President: Should there be any necessity of balloting, in order to not make any mistake, I wish to say that the care of the ballots shall be handled by Mr. Holliday, of Indiana, Mr. Frank Moore, of Ohio, Mr. Voiland, of Minnesota, and Mr. Hunt, of Virginia.

We will now take up First Vice-President. Are there any further nominations?

Mr. Reuvers: Being that there are no other nominations, I move that the Secretary be instructed to cast the ballot for Mr. Townsend, of Iowa. Seconded and carried.

Secretary: I hereby cast the vote of this Association for First Vice-President for Charles F. Townsend, of Iowa.

President: I declare Mr. Townsend First Vice-President of the Association for the coming year.

Mr. Townsend: Mr. President, Ladies, and Gentlemen, Fellow Photographers: I assure you that this is an honor that I greatly appreciate. The experiences I have gained during the last year, together with four years on the Iowa Board, have given me a fair idea of what is expected of an officer of this Association. I must say that I tremble a little when I think of the responsibility you have placed upon me, yet I trust you will be charitable in your criticisms and liberal with your assistance. I shall bend every energy to make the Congress of Photography a real live spot in the 1912 convention, as it has been this year. My greatest ambition is to make our beloved profession a place it should occupy in the professional world, and to this end we meet in State and national conventions yearly. Each of these meetings should be a step upward, bringing us ultimately to the position we desire. Let us not go home and forget the lessons we have learned this week and in some unguarded moment do something to bring discredit rather than credit to the community, but let us go home with our hearts full of enthusiasm, our minds full of new ideas, and put them into practice, fully determined to go back to the convention next year with one picture, and with the consent of the board I shall advocate that one picture be brought up to the next convention and a harmonious display be the result. I wish to thank you, my friends, and assure you that with your coöperation and assistance the board will make next year's convention a hummer. I thank you.

President: The next is Second Vice-President. Are there any further nominations?

Mr. Worsackman: I don't want to take up much time in eulogizing the man I place in nomination for this office, but want you to know what he has done artistically for the Association, both national and State, a man whom all of you respect and love, and I want to place in nomination brother E. A. Doty, of Battle Creek, Michigan, as Second Vice-President. Seconded.

Mr. Holloway: I want to second the nomination of Mr. Towles, for various reasons. Mr. Core made a few remarks, likewise supported by Mr. Goldensky, that as long as the Convention was going East we should have the balance of our power on the executive board Eastern men. With all due respect to Mr. Doty, he happens to be on the other side of the line and is classed with Western men, and I believe for the best interests of the Western organization we should elect Mr. Towles, and the following year when the Convention goes West, the

balance of the power should be in the hands of the West, and let us then take up the name of Mr. Doty. I believe that is for the best interests of this Association—that we have more Eastern men to look after the interests of the Convention next year, and for that reason I heartily endorse the nomination of Mr. Towles. Seconded.

Mr. Doty: I wish to withdraw my name from the nomination. I believe the balance of the power should be on the Eastern side, and my name was placed in nomination against my judgment, and while I would greatly appreciate the honor, the good of this Association is my first desire.

President: Mr. Doty withdraws his name.

Mr. Core: I want to rise to make a remark on one thing, if I may be permitted. It is a little out of the line. I would like to voice the sentiment, when I say that I don't like to hear the members picking out those from the East and those from the West. This Association is too big; it knows no east and no west. This Association represents the photographers of this great nation. The East is a part of the West, and this line that we seem to be drawing, and seem to be accenting here every minute of the time, will grow and grow, until it will be a faction, and we don't want any faction. We want this great body of men united, with one common interest, and that common interest the best good of all. There is not any East and there is not any West, and we are all for convenience, and in order that representation may be proper we have drawn this imaginary line, and that is all. It does not mean that the East and the West are divided. I hope they are more firmly united.

Mr. Hunt: I move that the nominations be closed and that the Secretary cast the ballot for Mr. Towles for Second Vice-President.

President: I now declare Mr. Will H. Towles, of Washington, D. C., as Second Vice-President.

Member: It is with great pleasure that I move that the President cast the ballot of this Association for Manly W. Tyree as Secretary of this Association, who is my best friend and my worst competitor. Seconded and carried.

President: It gives me lots of pleasure to cast this ballot of the Association, and make it unanimous, for Mr. Tyree for Secretary of this Association for the coming year. I declare him elected.

Mr. Tyree: I was afraid you were going to make me official bouncer instead of Secretary. I am glad that you held to it, and I will do the best I possibly can for you next year, and I thank you very much for the honor. I don't know that I can say anything more. You know I am not much on making a speech unless I get a little bit riled, as I did yesterday, and then I can tell what I think. I appreciate the honor very much, and shall be glad to serve with the officers that you have elected. You have a man in the chair, Mr. Ben Larrimer, who will make you a crackerjack president, and he handles the club, as I happen to know from attending the executive board meetings during the last year. I thank you very much for the honor, and will do the best I can.

President: Once in every three years we come around to this treasury job, and this year the committee has nominated Mr. Dozer. Seconded.

Mr. Medlar: I move that the nominations be closed and the Secretary cast the ballot of the entire convention for Mr. Dozer for Treasurer. Seconded and carried.

President: I declare Mr. Dozer elected Treasurer of this Association for the next three years.

The committee on selection of the next place of meeting are evidently

absent from the room, and so will the Secretary read the report.

Secretary: "Report of the Committee on Location for the 1912 Convention of the Photographers' Association of America.

"Your committee on the selection of a location for the 1912 Convention was relieved from a consideration of the Western cities by the arbitrary line which has been established dividing the United States into two sections, for alternate meetings.

"We recommend for your consideration, Philadelphia, Pa., and Atlanta, Ga."

Member: I move that we accept the report, and it be placed in the minutes, and that we proceed to ballot.

Mr. Holloway: I would like to amend that report by moving that we accept these reports and take a ballot, without any remarks. (Which amendment is accepted by the maker and seconded.) Motion carried by a rising vote.

President: There will be no talking on the two cities in question. Only those with blue and green buttons can vote. Of course, the ladies may vote. Only active members may vote.

Mr. Lively: I would like to move that we give Philadelphia and Atlanta two minutes each to present their propositions.

President: I declare that motion out of order.

Ballots were distributed and collected, and Mr. Holliday, on behalf of the tellers, reported as follows:

There were 289 votes cast, of which Philadelphia received 181, Atlanta, 107, and Atlantic City, 1.

President: I declare Philadelphia the place of the next convention.

### Saturday Morning Session

President: The first thing I want to do this morning is to appoint two committees:

The Commission on Foreign Affairs: Carl E. Ackerman, T. Dixon Tennant, Dudley Hoyt, J. H. Garo, and William H. Rau.

The Tariff Commission: R. W. Holsinger, Carl E. Ackerman, G. G. Holloway, Wm. L. Koehne, and Ryland Phillips.

There is one matter here that the Congress passed upon, that the matter of publishing the proceedings of this Convention be referred to the judgment of the Board. If there is no objection, we will do this.

President: I would be glad now if Mr. Dührkoop would come up here for a minute. I understand he wants to give us a few words, and we will be glad to hear from him. I am very sorry that we have not a good big attendance this morning. You know we have had a pretty busy week this week.

Mr. Dührkoop: Ladies and Gentlemen: The Convention is finished, and I state with great pleasure that it has been a very excellent one. They exhibited pictures which show photography to be on a very high standard. The manufacturers' exhibit also showed us great progress in all photographic accessories. Brotherhood and fraternalism is more in evidence among American photographers than I have seen it in my own country. I assure you that I am delighted that you have been so friendly and agreeable—all you, my dear brothers and sisters, have been to me and my daughter I can never forget. It has been the highest success in my life. We thank you very heartily, and I call, with heart-felt feeling, for three cheers for the United States of America and the Photographers' Association of America. (Applause.)

Mr. Cramer: Three cheers for Dührkoop and Germany. (Applause.)

President: Has anyone anything to offer or say for the good of the Convention before we proceed to close?

Secretary: I want to tell you one thing, speaking for the members. I have never had a more agreeable duty than having charge of the manufacturers' hall down stairs. I found them a gentlemanly set of fellows, and willing to do the fair thing, and they helped me out of many a tight place, as little things came up. One man gave up his booth and took another one for me. They are all anxious and willing to coöperate and do anything to assist us, and I just wanted to express my appreciation and wanted you to know that you certainly have a fine set of men in the manufacturers' hall, and they have been very nice to me. I am sure I appreciate it.

Mr. Ackerman: In behalf of the photographic press, I wish to thank the officers of the Association, the executive committee, and the members for their uniform courtesy to the press and their good will so frequently expressed.

Mr. Chambers: It is unanimous.

Adjournment.

## LECTURE BY RUDOLPH DÜHRKOOP BEFORE THE PHOTOGRAPHERS' ASSOCIATION OF AMERICA

### Saint Paul, Minnesota, July 27, 1911

LADIES AND GENTLEMEN: I am very proud to have the honor of standing here before you, so far distant from my native country, and to be able to relate to you something of photography—our mutual and fine profession. As I have already stated elsewhere, it may be asserted that in America photography has attained a very high standard, technically perhaps the highest. There has been much discussion on photography as an art. I myself do not occupy any extreme standing-point, but study art zealously, so as to get a comprehensive view of the subject. I do my best to produce excellent work, but do not argue as to whether my work is art; at the most I should like people to feel that it has been made under the influence of art. The picture itself, or, rather, the composing it in the space, the animation of the background by a skilful effect of spots, lights—those are the things which we always learn anew from the painters. However, we ought to avoid any slavish imitation. It does not do to give all one's pictures the character of reproductions from Gainsborough or Reynolds. To reproduce a pictorial effect of a sitting, everything depends on a delicate feeling for the propositions of space and light, on the lines and forms of the subject of the likeness, on the composition of the space given or presupposed by the frame. In these concrete elements lies the secret of the effect of a picture on the soul of the observer. He who wishes to produce a psychic impression by a picture cannot do it without mastering these details, but if he employs them with skill and taste we ought not to designate such a leaning on knowledge and experience as a mechanical procedure, but as artistic work.

The photographer has to be an absolute master of his technique if he wishes to attain something artistically valuable by photography. He must remain within reach of photographic possibilities. In a way, he must train

his eye to a photographic objective and learn to be as sensitive to the values of color and light as the photographic plate. Then he will be able to judge what seems good or disturbing to him in the photographic placing of his subject, and he will accordingly influence the posing of his picture.

Photography is the art of a Raphael without hands, the art of those men possessing a delicate and finely organized feeling for painting, a vivid sense of beauty and originality, of the character and soul of corporeal phenomena, and yet to whom is denied the power of creating and producing from within themselves what they see and grasp. Only by the astonishing improvement of the technique has the photographer gained the faculty of expressing his individual conception of the subject.

The cry for nature, for simplicity and truth, that issued from all the arts in the nineteenth century is now resounding in the photographic world. Everywhere we find the endeavor to elevate the photographic taking from a mere reproduction of nature, to imbue it with artistic feeling, and so far as it is possible to give it the character of an individual work of art. In producing the negative we no longer demand an equalized sharpness of the picture, which used to be considered the glory of a technically perfect photographer. The neglect of the unimportant detail in favor of the greater form, no more superficiality, but soul—that is an aim worthy of artistic endeavors, even if it seems to be unattainable.

If I am to describe how I work I must first mention that I work under quite different conditions than prevail in America. In Germany the big old glass box is in almost general use still; whereas in America a comparatively small skylight is employed. The big glass roofs are little calculated to give the studio a comfortable look, the American studio offering a far more habitable appearance. I have neither, and work absolutely without any skylight. Rather high side windows must give me all the light I want for sufficient exposure, and with what success—that you may judge from the pictures I have exhibited here. Certainly, I must acknowledge that with very tall people the height is not sufficient to light up the head, if the figure is to be taken standing. Then the chief light falls on the chest or waist, and I must have recourse to electric light. But in most cases I can manage very well with the light and attain the most varied effects with it. I am not able to alter the light as easily as can be done in most studios, but rather am obliged to try and place the persons at once in the best light of the room. Those are disadvantages which make the sittings difficult, but I and my assistants are so used to them that we can always manage to get the right thing. Now, there is doubtless for us a certain necessity which obliges us to occupy ourselves with this kind of lighting up and to study it. Far more than is the case in America are we obliged to go to private residences to take portrait sittings there. You seem to have a dislike to such sittings here, but unjustly so. For, in the first place, there is a great charm for the proprietor of such picture being able to say, after the lapse of several years: "This portrait was taken in the house of my betrothed, my parents, or in some other spot forever dear to me, and with which certain dear associations are connected." On the other hand, pictures taken in private rooms offer far more diversity than those taken under the same conditions in the studio. This viewpoint occupied by many a notable photographer would also find much applause

from the rich customers. Of course, higher prices must be charged for such sittings, but rich people would be quite willing to pay if their portrait had the attraction of something out of the common run. Surely such work is not easy, but my daughter and myself undertake such tasks unhesitatingly, and many of our pictures exhibited here have been taken in private rooms, and the diversity that people praise in our work has certainly been founded in our taking advantage of all possibilities, therefore also of these.

In private residences it is always difficult to find a quiet wall which permits the production of a good portrait. For this purpose we always make use of a piece of cloth that we take with us, mostly of an orange color, for a background. The capability of quickly discovering the suitable light for a sitting is a matter of experience and constant practice. Certain it is that ladies and children particularly show themselves much more at their ease in their own rooms, and that in consequence very original pictures are produced. If you photograph children in their playroom, at their dinner table, in the garden, you get the most charming pictures. Ladies have the possibilities of using the most different articles and costumes, and thus in boudoirs, and in the frequently beautiful rooms of private houses, photographs are made that absolutely do away with all the conventionality that the studios in the daily rush of business cannot help producing. Of course, people often wish to have portraits taken in places where there is no light for it; then flash light or electric light, if to be had, must be used. Flash light is altogether an excellent thing which I am fond of using, particularly for difficult groups and children. With it you get instantaneous takings that could not be obtained by any other means. The disadvantage of private rooms (that is, the insufficient lighting up), of course, forms a great difficulty. This must be helped out by white cloths. It can, however, be calculated that a reflecting cloth reflects about a quarter of the light and that will suffice in most cases to light the shadows up well. The conquering of these difficulties gradually becomes as easy for the skilled operator as the setting of the picture in the equal light of the studio produced by the drawing of curtains. But it is a delight and a great satisfaction to be able to produce excellent photographs under such difficulties. If I, or my assistants, seem to be having too much trouble and labor, I always say: "The aviator, the engineers, the North Pole explorers had quite other obstacles to overcome than we with our photography."

If you are once accustomed to go into private residences you will then also gladly avail yourselves of the gardens and parks of the rich for photographic purposes. And how wonderfully fresh and alive can ladies, children, and groups be reproduced if you are accustomed to finding the right light in the open air, which is not excessively difficult. Of course, you must not look for the accustomed lights of the studio, but also test and study all other possibilities of light. Taking photographs is possible in every light that our rooms or the open air afford, and if you have once occupied yourself deeply with portraits in "the open," you will feel great delight in the numerous and picturesque possibilities offered to your creative feeling.

If you wish to take a sitting in "the open" the subject must be placed so that it is near the wall of a house or a planking, a group of trees, or such like, to obtain some shade, while the other side is exposed to the sharp light. If you lead the model to and fro under

trees, the trained eye will easily find a place where the light is so constituted as to make a good taking possible and where light and shade suitably alternate. Of course, you must endeavor to choose the background not crossed by too many spots and lines and made too restless. Perfect smoothness and rest, however, are equally unnecessary, and we must observe how painters treat such things. Nor is it necessary that the portraits show the usual change of light and shade. On the contrary, it is highly important to operate with lights as modern painters love, thus also with front light, which produces less plastic but more surface pictures.

Compared to the frequently stereotyped uniformity of the studio light, the great diversity of open air and interior takings, with their continually varying scenery, is immensely more interesting, and every thinking photographer ought to endeavor to master and develop this side of photography and to turn this delightful diversity to account also in a business way.

Well, how do I take my sittings? I do not go to work with any preconceived notions, but offer the person a chair, beg him to make himself comfortable, and meanwhile begin a conversation adapted to the character of the person in question, concerning his wishes, etc. During this I study him and try to fix a position which seems suitable but which devolves from the sitter himself. I remain in constant contact with the sitter. The fixing is done by assistants, and only rarely do I creep under the cloth to make corrections. Hints from me must be sufficient for the efficiently trained operator to grasp and fix the pictures as I desire.

I try to obtain the truly natural in an unconstrained position and surroundings, and to avoid everything obstructive.

The portrait of a man is generally looked upon in photography as a grateful and easy task compared to those of children, ladies, and groups, the conditions for success being here simpler and more favorable. The woman's portrait has to all appearances richer variations—clothing, ornaments, accessories can afford more multifarious forms and motives, but require a peculiar psychological gift. From the history of art we know that even great portrait painters, such as Rembrandt, failed to grasp the female Psyche.

The man's portrait is more limited and decisive—the simpler the better it is. It is difficult (nay, in many cases impossible) to influence a man's expression and mentality. The photographer will be able to do little to influence a man of work, a scientist, a soldier, to approach his own conception, to get him to sit or stand differently to what he is accustomed to do. He will have to lay more stress on the lighting up, so as to let the head be thrown into more relief; he will choose the lighter background if he wishes the contours of the figure to say something; he will choose a narrower cutting to make the reproduction appear great and positive, will suppress all petty accessories, will try to subdue too violent high lights, for instance, here and there, as the linen, etc., but will, on the whole, do nothing to obtain a particular conception, gesture, or picturesque arrangement. Besides, many male customers only go to the photographers with great reluctance, and are grateful to him if the work is done quickly and without much bother to themselves.

However, if the photographer finds himself bound within seemingly narrow limits here, on the other hand he runs less risk of producing work which does not please or is unsuccessful, as often happens with women's, girls', or chil-

dren's portraits. The problem of similarity, for instance, which otherwise gives rise to disagreeable discussion and misunderstandings, will cause less trouble in men's portraits. A more pronounced formation of the skull, more definite features are of great assistance to the photographer who can heighten their effect by a sensible management of light.

Too great an insistence on the pose, etc., always seems to me an infringement on the rights of the other person, who ought to have his own position, and not that which another man wants him to have and which is not natural to him. An individual must remain an individual. My daughter, Mrs. Diez, on the contrary, has developed other opinions for herself. She arranges a good deal, particularly with ladies and children, but that is more necessary than with men. I have noticed that with lady sitters, particularly ladies of good society, a much easier and freer intercourse takes place if the sitting is taken by a lady; whereas a man is hampered by considerations due to a lady sitter, a woman is able and willing to fulfil all their wishes as far as they are conducive to an artistic arrangement. Certainly this observation you gentlemen will have made, too. At any rate, I possess in my daughter a supremely valuable partner, who earnestly studies to raise the standard of the photograph as high as possible, and she attains great successes with her method.

So we can well distinguish two principal kinds of portraits: First, those where the photographer's aim is to leave the sitter during the taking as much to himself as possible, and only by a judiciously chosen and animated conversation to cause him to reveal his real self and not remain in a lifeless attitude before the camera. During the conversation most different phases of position will be shown, and to fix the finest and most characteristic of them is now the affair of the photographer. He will seldom succeed in doing so with one taking, and so it is certainly right to take rather many. For even if the subject fulfils all technical and artistic conditions, it is not out of the question that just in the moment of taking he will suddenly change the expression, and you often see just during the exposure one corner of the mouth droop. *During* the exposure, but not before, I am fond of placing a beautiful picture—not a photograph—just before the eyes of the sitter. I take another picture for every taking to divert the sitter's attention from the process of exposure. We all know how often a strained expression appears during the moment of exposure. That is the way I try to grasp the personality of the sitter in the greatest simplicity without influencing him too much.

The second way is to take the photograph with all the means of artistic aspiration, and for this purpose to arrange and include within the picture the charm of an ideal portrait, a manner which finds great favor, particularly with ladies, but which may possibly greatly influence the likeness, but similarity is a very relative idea. Every sitting we take with another light or other dress gives us a quite new impression of the person photographed, and among a number of portraits it is mostly difficult to decide which is the best likeness. In general, that one will be chosen which in the opinion of the person in question is the most beautiful.

Now, in order to work richly and deversifiedly the photographer's brain and hand must be highly developed. The technical training of a studio is not sufficient for this, but he must also be of an extensive education—an education that is capable of inspiring

the owner for the noblest problems of humanity and to understand them, that can march hand in hand with the technical and esthetic development of the cultured world, and, above all, follow the new art-industrial progress with interest, in order to extract from them valuable material and also new ideas for the production of human portraits. There is always in the rush and bustle of one's daily business a danger of falling back again into a hackneyed, conventional manner.

Only ample knowledge and a vivid imagination can preserve us from this. But to render the imagination fruitful it must always be rendered productive by the study of the great masters of portraiture, how they placed their subjects in the space, and how they increased and vivified the effect of the portrait by their background. A smooth background will always prove monotonous, therefore the effect of spots must be minutely studied, and just that do we learn best from the painters.

Now we will go on to discuss single details, and will first take the *head:*

The head in the first place claims our attention, and already here we meet with the greatest difficulties to suppress abnormal formations as much as possible, should these seem too pronounced in different places. Single parts of the head—eyes, nose, or mouth —if finely formed, can be accentuated so as to catch the eye of the spectator, or at least to challenge observation first, so that less beautifully formed parts remain more unmarked. We seldom find a face strictly symmetrical in form; in most cases we can observe two different halves of the face, the one half shorter or also broader than the other. By photography such anomalies can be corrected or, on the other hand, exaggerated. The side nearer the apparatus appearing mostly larger, by the choice of the sides to be taken the irregularity can be either increased or diminished. In many faces the nose is bent sideways. If the head is turned to the same side a favorable likeness is rarely obtained. That side toward which the nose is directed usually proves the most favorable side for taking. The custom of speaking of a "photographic side" is therefore not without grounds. Other circumstances, however, can render it necessary to take a head from a certain side.

The *eye*, the mirror of the soul, has indeed the task of first displaying the inner man, but we cannot forego its technical treatment.

It is not indifferent whether we take the head or the level of the eyes higher or lower, for the form of the lid enclosing the eye is altered according to the position of the head, at one time appearing broad, at another narrow. The lid must frame the eye, and a fine frame can here, too, beautify the contents. The idea beautiful is certainly here a very wide one, for if we wish to characterize racial beauty, the eye in the first place must undegro very different treatments. If it is a question of race we must also take the peculiarities of the same into consideration, and the idea of beauty must submit to be altered according to the racial type.

If the character of a person is already expressed by the carriage of the head, the characteristic qualities can be influenced by the proportions of the height of the camera to the height of the head. But still more reasons will show that the height of the camera is of certain importance.

The higher the camera stands the deeper the head sinks onto the breast, the shorter the neck appears; in the opposite case longer, in the case of the photograph being taken at a short distance, as is generally the case with half-length pictures. A bald head

taken from above will show the deficiency more marked than with a deeper placed camera inclined from above to below, while with a small snub nose the contrary is to be observed.

To obtain a favorable reproduction of the mouth requires, too, a right carriage of the head. A sharp mouth is frequently softened by a suitable position of the head, as well as an irregular face, for which the height of the camera must particularly be used as an ameliorating influence.

The *ear* can generally put up with less consideration. It is generally often placed in the indistinct zone. But, however, in some cases it will require a particular treatment and consideration. Ears standing off from the head prohibit a taking direct in front.

The *hand*, in which artists have always recognized the main vehicle of expression of personality, has mostly received but scant attention from portrait photographers. The attempt to reproduce the hand as a living part of the organism in connection with the head was scarcely ever formerly made. Whereas the lighting up of the skull and the face was studied with the utmost care in order to employ them as excellent means for the characteristic of graceful taking, the hand in this respect has never received any attention. Even nowadays we are still mostly satisfied if the hands in a picture, where they cannot be left out, do not disturb the external pose, but to use them as a means of expression, to recognize in them an integral part of the personality, is an art which in general still lies beyond the ken of portrait photography. It is no doubt very easy to again refer photography to the study of the old masters, but in this case it is usually the right thing. The greatest portrait painters of all ages have always considered the hand with the deepest interest, and the greatest masters of the last century have in this respect gone farther than their predecessors of the best times of the Renaissance ever ventured. Here portrait photography will find a grateful task, and the artistic perfection of the photographic portrait, by attention and fine feeling directed to these matters, can attain much which till now has been impossible.

### *Full Length and Three-quarter Length Portrait*

A half-length portrait is comparatively easily and effectively made. Real difficulties first begin when the hands and the rest of the figure are added. We have already talked about the hands. In full length portraits it is well, and sometimes even necessary, to include something of the surroundings. Chairs and tables are used when some particular position is demanded. In this respect good taste will always know how to avoid the undue obtrusion of the furniture, for the portrait or the figure of the sitter must always remain the chief consideration, and for this purpose the head must be most distinctly lighted up. For full length takings it is also good to use objectives of long focus to prevent optical misdrawing. As I have already mentioned, I employ very simple means and try to make the sitting or standing subject take his own position. I go round the person with the camera, if the pose he has adopted does not seem suitable for taking, until I find a position I consider worth fixing.

"The finest pathos lies in simplicity," says the painter Anselm Feuerbach; it is of noble and intrinsic effect. Therefore, avoid also in photography everything affected and far-fetched. In my sittings, for instance, I cause the person to sit down quietly and comfortably in an arm chair or something

similar, the hands remaining in the position he just places them, no smoothing of the clothing, no touching of the head or hand is allowed, for all that influences the naturalness of the subject. I rather try to get the necessary alterations of position by showing him what I want and directing him by making suitable gestures. I should like to express the standard I go by in saying all positions unconsciously taken by the sitter are in accordance with his being or character. I try, therefore, in the course of the conversation, after one taking has been made, to cause the sitter to alter the position without strictly asking for it. Just when he is changing the attitude you get positions very fresh and vivid. Such good attitudes must be fixed with a skilful eye and quick hand and the model at once requested not to alter any more. Thus you will frequently obtain a very great picturesque view.

As before said, I try personally to get the independent position of my customers and practice daily the catching of positions unconsciously adopted. At all events, I owe the greatest part of my success to this manner of proceeding.

To give my sittings lifelikeness I never let the person sit quite straight. A human being (except the soldier at attention) scarcely ever stands straight—the head as well as the body is always inclined to one side or the other. Observe how this occurs a thousand times in life, on the promenade, in the café, at home, or wherever it be. So do it too in your sittings and your pictures will have the charm of freshness and originality.

Concerning the takings of full and three-quarter lengths still much could be said, but it is best to let chance play some part and yet allow imagination some scope. Practice is always better than theory.

In this kind of taking the professional photographer will not be able to bind himself much to academic, or let us say technical, rules, for daily and hourly must he infringe them; he must rather train himself to produce good photographs under all conditions. This seems rather a hard task, but yet it is possible. Certainly great presence of mind, enormous patience, delicate feelings for the manifold effects of light, excellent technique, and artistic eyes are necessary to prove up to the mark under all conditions.

The background is another important factor in the creation of the portrait, in the working up of which we must also study celebrated pictures. On the portraits of celebrated persons no accessory thing must intrude, causing restlessness, irritating the portrait, and rendering it worthless. I cannot call your attention too much to that. Thank goodness, those dreadful backgrounds that used to make photographs so ridiculous have now disappeared forever, at least out of the studios of photographers of note and fame. But even plain backgrounds cannot always be used for portraits, as these also cause dulness in photography. Wherever we find ourselves we are always surrounded by touches of life; never do we find ourselves in a surrounding as smooth as satin paper or polished marble; therefore the background of a human portrait must always show signs of reality, which, however, must be so delicately displayed that the person represented always exercises the chief attraction on the eye of the beholder. Look how the painters treat backgrounds, nicely calculated strokes of color contrasting with the chief direction of the portrait, alternating weak and strong, varying in tone altogether, manifold shades of color, and rendering the environment without undue accentuation; thus they

animate the portrait and render it harmonious without tedium. That it is possible to render this manner in photography has been sufficiently proved by newer masters of our profession. America has in this shown herself a pioneer, and your way of producing backgrounds as found on the beautiful works of the English painters, Gainsborough, Reynolds, etc., has much charm and pleased me exceedingly when I came to America in 1904. But now you see it too often. It is, however, dangerous and logically not correct to take such a pronounced manner as a pattern. Every photographer ought to try to cultivate his own taste, and for this purpose to study good works of art untiringly and on every occasion throughout his whole life, also the exhibitions of camera pictures, thus to obtain a mental extract thereof, which prevents his eye and feeling becoming one-sided and leading again to the conventionality which reigned so long. The simplest way is to pour dull varnish over the back of the photographic plate and then to draw delicate sketch-like designs on this with stump and chalk, which when copied through the glass come out undefined and are really only lighter spots, but produce an effect which considerably increases the artistic effect. If these designs be so carefully considered that they will satisfy all artistic demands, well enough, but pains will always have to be taken to satisfy criticism.

If my pictures are taken in all kinds of places, in very different lights, the developing also requires a somewhat different method. I very often have to fight against both under and overexposure. To overcome this I often make use of standing development, but in somewhat altered form. In a grooved glass dish water of about 18° C. is poured. If with normal developing the lights come out too quickly on the plate, I at once put the plate in the above-mentioned dish with the adhesive developer, which, of course, must not be rinsed off before. The first underexposed plate in the first groove, the second in the second groove, and so on, so that only small spaces intervene, as otherwise the adhesive developer would too soon become ineffective. Simply placing the plates in water causes the lights to develop much more slowly and the shades gain time to mark themselves. Otherwise the lights would have become far too quickly dark without the shades getting covered enough. The developing power of the greatly diluted developer is of course soon exhausted. Then I go on developing in normal developer, but if the shades are not covered enough the plate is dipped again in the normal developer for a moment and then again placed in the glass dish, and so on. All this goes quicker than I can tell, and I have thus attained the best results in many thousand cases, and many of the pictures exhibited here have been developed in this manner.

My task has been to describe to you how I and many celebrated photographers in Germany work, but I scarcely believe that this difficult manner of photographing will please you enough to use it as a general rule. Of course there are also in Germany a number of small second-rate men who try to make such things for a cheap price. But it is quite a different thing when a highly trained photographer, with fine understanding, takes such pictures, and I also believe that the rich people here in America would pay very high prices for such sittings if you made high charges and in return produced something exquisite. I can well imagine a great and celebrated photographer daily visiting his customers in his motor car, and making a

great success. In every case this way of working offers enormous diversity and causes one to feel much pleasure in one's work. Progress is what we want, and here lies a very great progress compared to the monotonous work of the studio.

I shall have the honor to exhibit to you with lantern projection a number of such photographs taken out of the studio and without a skylight, and trust that the pictures shown will convince you of the healthiness of my ideas and the truth of my explanations.

When the productions of the photographers possess this spirit, then their work will be high, that of some most highly estimated, and the time will come when their works will be collected and valued like those of the old copperplate engravers and etchers. Let us therefore devote ourselves to the study of the great masters of the painted portrait who have created such splendid models for the treatment and arrangement of the portrait; then in the future the camera portrait will attain a height which will place it on the same level as the works of the related art. When we see it developing mightily under the guidance of artists of exquisite taste,' then photography, too, will be on the broad road to new successes, if the motto of all these aspiring photographers remains—

Truth and Life.

## THIRD CONGRESS OF PHOTOGRAPHY

### Held in Saint Paul, Minnesota, 1911

FIRST SESSION, TUESDAY, JULY 25

Chairman: In order to start this thing properly, I will appoint Charles Lewis and George Harris as a Credential Committee, in case there is anything that needs adjustment. I will ask the Secretary to call the States, and those who are delegates or alternates will please answer quickly. (Whereupon the Secretary called the roll of States, and the following delegates were present):

New England: Carl Ackerman.

Delaware and D. C.: Mr. Rau, Mr. Goldensky, and Mr. Harris.

Illinois: Mr. Pratt, Mr. Medlar, and Mr. Tennyson.

Indiana: Mr. Holloway, and Mr. Schwartz.

Iowa: Mr. Voiland, Mr. Ferguson, and Mr. Reuver.

Kansas: Mr. Harden and Mr. Murphy.

Michigan: Mr. Doty.

Minnesota: Mr. Egan and Mr. Butler.

Missouri: Mr. Studebaker and Miss Reineke.

Nebraska: Mr. Leschinsky and Mr. Soper.

Virginia and Carolina: Mr. Hunt and Mr. Holsinger.

Ohio: Mr. C. L. Lewis.

California: Mr. E. F. Smythe.

Texas: F. W. Voorhees.

Wisconsin: Mr. Claws and Mr. Gutlinski.

Mr. Ackerman: I would suggest that we take up the suggestions made by the President seriatim.

President: The Secretary will read the first paragraph.

Secretary: "Another plan that should be taken up this year is the one which I have been suggesting at all of the State societies that I have attended, namely, that a line be drawn through the United States running north and south, dividing the country into a Western division and an Eastern divi-

sion, so that a convention city could be chosen on alternate years, first on the east side and the next year on the west side of that line. Such a plan would effectually do away with the idea that any one part of our country is getting any the best of it as regards conventions."

President: The first question in the President's message is the question of dividing the Photographers' Association of America into an eastern and a western division. Has anyone a motion to make upon this proposition?

Mr. Ackerman: Is Canada eligible for a vote?

President: It certainly is. Is there a delegate from the Dominion of Canada?

Mr. Ackerman: Mr. Leatherdale.

Mr. Ackerman: I move you, sir, that the suggestion of the President with reference to the dividing line between the United States be adopted by the Congress and so reported to the Convention. Seconded.

Mr. Snow: I have also given considerable study to this same question, not knowing that Mr. Harris was on the same line, although I have been figuring on four or five districts, giving perhaps four or five parallel lines, or nearly so, in the country, making the Convention rotate in these different sections alternately, and so if there was five it would be in each section every five years, and in that way it would give each section of the country a fair show and there would be no sticking too close to the line, but I have no particular objections to this idea and won't make any objections.

Mr. Eagan: The only thing that was in my mind was this, where would you draw the line?

President: That is another question; that is not before this body at the present time. The question is: Shall we proceed to find a line?

Mr. Leschinsky: Since hearing the report from our worthy President, I have heard a good many remarks from the other members, that they fear that if we do this the Association will be split up and there will be two Associations, a western and an eastern, and I think it would be well to consider first if the division line will not alone create a rivalry, but also a split in the Association.

President: I would rather some one else would answer this question, but the idea of this is not to create a rivalry but to destroy it, and not to split the Association but to cement it. I don't see how you could get that idea.

Mr. Leschinsky: I just wanted to bring that before the Convention. Motion carried.

Mr. Lewis: Does the dividing line control just the United States, or does it go into Canada as well?

President: That remains for us to determine.

President: We will proceed now to select the line. Now if anyone has prepared a statement of their idea of the proper location of this line; we know that President Harris has done so.

Photographers who are not delegates do not have any vote in this meeting, nor any voice—no one but members of the Congress.

Mr. Holsinger: Mr. Harris has given this some thought. I suggest that we hear from him in regard to this dividing line. Let him tell his reasons.

Mr. Harris: The only reason I have not taken Canada into consideration is that it was hard for me, down here, never having spent much time in Canada, and not knowing that they were interested last year, but I understand that they are interested this year. This year we will be glad to take it up with them. My idea of this line is simply this. If we draw a line somewhere down through the country,

taking Canada and the United States, so that we have a Western division and an Eastern division, and we can hold the Convention in alternate years in these two different divisions. In doing this we will avoid all argument such as we usually have, and the Convention cannot be held in one end of the country. No matter how far east it goes one year, it will go west the next year, even as far west as California, the other side of the line the next year.

I then looked at my map and found that a good big dividing line was this Rocky Mountain proposition. The Western States west of the Rocky Mountains I did not take into consideration, because we have only had about twenty members from out there, so I took them out of the proposition, and started the line east of the Rocky Mountains, and taking that east of this line we have a territory west of this line with 6100 photographers, and east of that line 6300 photographers. I am giving round figures. There are 200 more photographers in that territory than there are in this. Consequently the way I have run this line is by the number of photographers. I found in starting at the Mississippi River and running it up to the Ohio River, then on the Ohio River to the Indiana line, over the Indiana line to Lake Erie, and calling that the East, and on this side West. You can continue that line into Canada wherever the Canadian members would like to have it, then if we want to go to Montreal and Western Canada some time it would be the same line. There is one statement here that I did not read this morning. The centre of population of the United States is 4½ miles south of Unionville, Monroe County, Indiana, according to the Census Bureau announcement of today. That bears me out in finding the centre not only of the photographers population but also of the United States. It really does not make much difference to me where this line is drawn, only it will give us the same number of large cities outside this territory as there is on this side of the line if you leave the line where it is now. I think that is really a fair place to have this line drawn.

President: Will you make a motion that that line be adopted?

Mr. Harris: I move you, Mr. President, that that line be adopted.

Secretary Tyree: I second it.

Mr. Leschinsky: The city of Detroit —is that supposed to be a Western town?

President: Yes, in the West.

Mr. Leschinsky: Also Milwaukee?

Mr. Harris: Yes.

Mr. Leschinsky: We fellows out here think that is far east. Suppose you have it sometimes in Philadelphia, and the next year take it to Detroit; that will be East for us all the time, it would stay East and we could not consider it. If it would be Des Moines, Omaha, and Kansas City, and all these towns. Of course while I agree with Mr. Harris, maybe you can run it straight up the Mississippi River, or nearly so, and make the divisional line say Chicago or near there. That is my idea.

President: The chair will not under any circumstances argue any of these questions. I don't wish to introduce my personal opinion in regard to this.

Mr. Harris: Mr. Chairman: If you will allow me to explain, I believe I know this proposition better than anyone else here. I would say that if we go west of this line, we are not fair to the number of photographers east of that line. I think the population centre, no matter where you are, ought to be taken into consideration. In a few years, if this does not suit you you can easily change it. I think this line is fair from a matter of population,

both photographically and from the Census Bureau.

Mr. Lewis: I want to ask for my own part if this line will stop at Lake Erie.

President: It may follow down the St. Lawrence and the Great Lakes.

Mr. Roberts: If we adopt this we have the same proposition before this Association.

President: We have to recommend it to the Association.

Member: I am sorry to say that in the West the feeling exists that this line is being sprung to keep the Convention away from Kansas City and from the East. Any organization which can enact a law can repeal a law. I am in favor of this all right. It seems to me that we should make it in some way more permanent, either for a term of years or make it so that more than a majority will be necessary to change it.

President: May I answer that question? There is no possible change in our Constitution except that it is brought before the Convention by a member at a preceding meeting and must carry by a two-thirds majority vote, so your fears are certainly not well grounded on this. I gathered from what you state that you have a fear that this is but temporary and that this is to pull it away this year. I am sure nobody would have such an idea as that; if they were familiar with the Constitution of this Association they would know that it could not be done by a majority vote but it takes a two-thirds majority, and having been brought previously before the Convention for their consideration and laid over, before it can be acted upon at all. Motion carried unanimously.

President: This action carried with it the recommendation of an amendment to the Constitution to the P. A. of A. That should be embodied in the motion, that it is a recommendation sent to the P. A. of A. for an emandment to the Constitution adopting this line.

Now I would like in connection with this, as Mr. Harris proposed, the most capable man to present this, having given it his attention, I would like to have this body select a man—not himself—to present this question to tomorrow's session of the P. A. of A.

Member: I offer a motion that our President be authorized to perform that for us tomorrow.

President: It is a difficult thing, as he would be presiding. It should come from some one who is not an officer of the Association.

Mr. Gutenstein: I would suggest Mr. Ackerman.

Mr. Harris: Mr. Lewis is familiar with this situation and has made a study of it, and I would suggest that he be the man.

Secretary: "The first is the distribution of expenses among the officers, which I consider all wrong as at present conducted.

"The outgoing president should be allowed his hotel and railway expenses for his attendance at the following convention. First, because of the help that he could render in advancing and finishing plans that have no doubt been started when he was president.

"Second, because of the added dignity and standing it would bring to the Ex-President, and third, because of his usefulness on committees and the help he would be able to render from the floor."

Secretary Tyree: Right along the line of his first recommendation that he has offered I have a resolution that I would like to submit to the members. It has been very unfortunate in the past that our outgoing president, after gaining the experience that only can be gained by going through the chairs to president, we lose his valuable as-

sistance, and in view thereof I have prepared a resolution that I would like to offer, which will make him an advisory member of the board, and I will read it the way I have it prepared.

"*To the Members of the Congress of Photography*:

"We, the undersigned, respectfully recommend that the past president become an advisory member of the Board for the ensuing year and the Constitution be amended to the above resolution."

Member: I move the adoption of the resolution. Seconded.

Mr. Holloway: I believe if you do that there is another motion coming before the house which this conflicts with, or, in other words, this practically ignores the other entirely.

President: It is a substitution.

Mr. Holloway: I believe that a matter of this kind should be given a thorough discussion before it is passed, and that it should not be passed too hastily. Now I have been through the chairs, and I know what it is, and yet sometimes it looks to me that that might be a reflection upon the present officer. In the days when I served as president and some others served as president, we had nothing of that kind, and we managed to get along, and we did not add so many tails to the kite, so that it is still flying. If we add too many tails to the kite it might keep it from flying. I am not opposed to anything for the benefit of the organization. That seems to me, however, to be adding an extra expense uncalled for. I am opposed not to it but I believe it ought to have a thorough discussion before it is passed.

Mr. Leschinsky: I second the motion.

Mr. Holloway: I presume that we have implicit confidence in the Executive Board that is elected for the coming year, that they are able to carry the destinies of this organization through successfully; I don't see why we should add $100 expense to that because each year we have got to bring the retiring president; they could come if they wanted to but if they did not come we could get along well, although we would like to have them with us. Some of us who are ex-presidents come, and I don't believe it is absolutely necessary to have them. If we find that it is absolutely necessary to have the advice of the retiring president each year, the Executive Board would have power to pay his expenses, if they needed his advice, but to make it an absolute law, as I said before, it is putting too heavy a tail on that kite, and if we keep on doing that, pretty soon the kite won't float. We are soaring high now, and let's keep it there. I don't object because of that extra expense, but I believe it is unnecessary. It is up to you. Let us not sit here now and see this thing go on. and say yes and no to everything that comes up; let us have a general discussion of this, and then afterward we will all be satisfied. I feel like fighting against anything if I am not in favor of it, and then if the majority rules, I will fall in line. I have no objections to it, only we ought to consider these matters.

Secretary: I would like to answer Mr. Holloway. The President, as the office is conducted at the present time, we will take our President, Mr. Harris, who has visited practically every State association, and has gathered views of the associations together, and he is in possession of information today that is very valuable indeed to any new man coming here on the Board, and as he gives his services free, it is nothing but right that we should give him some honorary position and gain experience also at the same time at the following Convention. I don't know of anything that it seems to me is more unfortunate than the way in which we treat our ex-presidents. We have the benefit of their work and their experience and

their service, and the next year they come to the Convention, and are not asked anything, and consequently the officers stagger along in the dark, and sometimes make a mistake, when if we had an advisory member, those who are ex-presidents, these mistakes would not happen. Of course we can run along. We have had some pretty bad years in the history of our Association in the past, and it could have been helped by our getting this experience from the ex-president, and also you would give him some dignity and some standing that he has not at this present time.

Mr. Lewis: Mr. President, I want to ask for information. Is this $100 to be given to the ex-president, to be paid for his expenses to the annual board meeting?

President: Just a moment; there is not any amount specified in this; that is another proposition. The resolution read here was that the President be made an advisory member of the board for the ensuing year. There is no $100 in this question.

Mr. Ackerman: Upon this resolution and in the light of the remark made by President Harris to the effect that I was not acquainted with the Constitution, I find that if my memory serves me right, each retiring president of the Association becomes automatically a life member of the organization, and as such has all the rights, privileges of a life membership. It seems to me that there is some wisdom and a great deal of merit in the suggestions that have been made, and I believe that the question of compensation is a matter which is too infinitesimal for us to consider with reference to gaining the services of so valuable and able a president as President Harris has demonstrated of himself. It seems to me that we could go even a bit further. This organization has been tied down by the heritage of the years; it has certainly taken upon itself life which it never had before, and it is befitting that in an organization of this senate or the Congress, the whole organization, that new and radical things should be done. This is a valuable suggestion. I would suggest in connection with it, however, that we discuss the advisability of adding all of our past presidents to the advisory board, so that they may, even from the lapse of years come here and give us the benefit of this advice. I find here Mr. Proctor, who conducted one of the finest conventions that we have held. Of course he is here. Other past presidents are here. They are here to give Mr. Harris their advice and their assistance in making this Convention bigger, larger, and better, and more far-reaching than before. The question of advisory service does not necessitate the fact of their physical presence; the United States' Mails, the night letter-grams, and the aerograms and other methods of communication, place all the members of the Association in touch, and it seems to me eminently proper that if we are to recognize one past-president that we should recognize the entire board, because the man who was past-president ten years ago can advise us as to his ideas, and how it has been done every year since, and so on up until this good time when Mr. Harris, who has gone all over the country, who has traveled more than any other president ever traveled, who has addressed more people, been in more cities, written more letters, talked to more manufacturers, and has met more men in this matter than any other president. I thank you.

Mr. Voorhees: I am heartily in favor of allowing the past president his expenses to the next Convention. I think it is little enough compensation for the work that he has done. In our little Association in Texas we have from 75 to 100 members, and we retain

three past presidents and pay their expenses to the executive meetings.

President: Will you pardon me just a moment. I wish that you would adhere to this question. I don't say this in censure, but we don't want speeches. We want business. You are not talking on the question. The matter of compensation does not enter into the question before the house. The resolution was in plain English, that the past president be made an advisory member of the present board. Compensation is not mentioned, and it is not a subject for discussion at this time. The expenses are not mentioned. The question before the house is, shall the past president be made a member of the advisory board and the acting board. Nothing else. Confine yourself to the question, please.

Mr. Harris: May I ask to have that read again?

Secretary: "We, the undersigned, respectfully recommend to your honorable body that the past president be made an advisory member of the board for the ensuing year, and that the Constitution be amended to conform with the above resolution."

President: Gentlemen and Ladies: Please confine yourselves to this question which is before the house.

Mr. Growers (Iowa): If I understand it, this refers to the present president. Is it necessary to amend our Constitution just for this one case? Can't we pass a resolution without an amendment? If we amend the Constitution then it would be for every ex-president after this?

President: I think that is the meaning of this. It means that each retiring president.

Mr. Ackerman: May I inquire just exactly the intent of the resolution with reference to representation by the ex-president at the meetings of your executive committees. Does it mean that he becomes a full-fledged member with power to vote upon every subject?

President: It says "Advisory," no vote.

Mr. Snow: It seems to me that we are afraid we will not get competent presidents in the future. I am opposed to it.

Mr. Holloway: That brings us to the point of view what Mr. Snow said, this outgoing president becoming a member of the advisory board, as our chairman spoke of, there was nothing about expenses in it, but that necessarily carried with it that added expense just the same. He is a member of the executive board. This is an added expense. If the Convention should go from here to California, we will say, there would be at least for this advisory member—I am not speaking about Mr. Harris or anyone, but there are years to come. That means at least five or six hundred dollars expense for that one member, to carry him out and back again. That question will come in afterward when your executive board sends him there. I wanted this generally discussed and heartily satisfy every one. You know before you vote on that what you are voting for. There are other years to come, there are other retiring presidents, there are other convention cities to go to, and that is always coming up. Now then, I have absolute confidence in Mr. Larrimer as to his executive ability. As I said before, I don't think there is a man in the United States of America who has any better executive ability than he has. I would consider it for him a reflection upon his ability as president to have to call in an ex-president to advise him how to carry that on. That would be a reflection upon Ben Larrimer, if Mr. Harris had to come from Washington to Kansas City or wherever it is to advise him how to arrange for the next convention. In due course of time, as Mr. Tyree

becomes president, as we all hope he will, supposing he followed Mr. Larrimer. He will by that time have executive ability and have experience. Would it not be a reflection upon him to send Mr. Larrimer there to advise him how to do it? The very success of this Convention today is from the fact that that little fellow down there had a head of his own and went ahead without any advice. He has done different things from any other president of the Association. He may have made his mistakes before we get through, but he has had his own mind and he has carried it out and we have seen the effects of it. If a man's becoming a life member of this Association is not honor enough to him, and if this is not enough to cause him to go thousands of miles to help the Association, what would? I come to these conventions to render my aid. Why? Because I am a life member of this Association. Do you think that I would value my life membership in this Association if this organization retrogressed? No. I want to see this organization grow higher and higher, so that my honor will be greater, and every man should do that and we don't need to have to call a man in for that purpose and add that expense, because he ought to be willing to pay for it. and Mr. Harris will be willing to pay for it, or any other president. I think I have made myself clear on that point. It is not that I want to kill any measure that anyone in particular would be interested in, only for the good of the organization.

Secretary: I want to take up the first thing that Mr. Larrimer called your attention to, in regard to the added expense. The idea of making the outgoing president an advisory member of the board, I want to tell you that it does not make any difference if it costs $600 or a $1000, to carry the outgoing president from San Francisco and back, you will never pay for that service he has given to the Association. Never. And, furthermore, I want to tell you another thing in regard to it being a reflection upon the president of the ensuing year, why is it not a reflection for him to have four other officers to help him?

Mr. Holloway: They are regularly elected officers.

Secretary: No matter how strong our President is, he is certainly anxious for the advice of his other four advisers and their opinion is very helpful to him indeed, and just because he is President he is not running the entire Convention. As far as the outgoing president being an advisory member of the board being a reflection, to my mind that is absolutely silly, because, as I said a while ago, the outgoing president has gained experience that it is impossible to gain without passing through the chairs, and what is the use of having these men trained for three or four years on a board and bring them up to president and give them that experience and then turn around and lose every bit of that experience for the sake of a few dollars. Now, you take any president that we think is big enough to control this body. I don't think if he is big enough to be president, he is certainly big enough not to be so small as to value more his own opinion than what the outgoing president would tell him to do. That point, if I may say, is very foolish indeed, but my idea of the whole thing is to get an added dignity to the ex-president, and to my mind I don't know of anything that is more unfortunate than to give your time and money to this Association, and then retire from the board and on the following year come up to the Association and have nothing in the world but a life membership.

(To be continued.)

# TRADE NOTES

THE BAUSCH & LOMB OPTICAL CO., Rochester, N. Y., have just issued a book of *Useful Tables for Photographers*, being a compilation of useful tables and facts relative to the use of lenses for portraiture, enlarging, etc. They will be glad to send a copy to any of our readers on request.

---

ARE you looking for a permanent and positive intensifier? We have obtained most satisfactory results from the Simplex Intensifier, made by the Simplex Intensifi r Co., of Kansas City, Mo. It produces any degree of intensification and keeps indefinitely. It does not granulate the film and has no influence on the transparency of the negative. You will find it worth a trial.

---

BURKE & JAMES, of Chicago, have just placed on the market their new Style D tank. It is a single reversible tank for developing one to a dozen plates, and is one of the most perfect daylight developing devices on the market. Tank development is now so well known and appreciated for the excellent and uniform results obtained that it is not a question of tank or dark-room development as of the particular type of tank. The Ingento D tank provides the simplest and most efficient method of development, fixing, and washing, and, in conjunction with the Ingento changing bag, cuts out the dark room entirely. It comes in five sizes, ranging from 4 x 5 to 8 x 10; the 5 x 7 size can be had to take either twelve or twenty-four plates. The prices range from $3.50 to $8.50. Ask your dealer to show you one, or write Burke & James for a descriptive circular.

---

PHOTOGRAPHERS who are interested in improving their lens equipment should correspond with Messrs. Bausch & Lomb Optical Company and secure a copy of *What Lens Shall I Buy?* This booklet is along quite unusual lines and abounds in useful suggestions. Address them at Rochester, New York, and mention this publication.

---

VISITORS at the National Convention were astonished to see on display in the Convention building three enormous negatives and their transparencies, size 30 by 60 inches; also three beautiful warm sepia carbon prints of the same size. The man in whose brain was conceived the idea of making these gigantic portraits—an old man, a young lady, and a little boy—was Mr. W. S. Lively, of the Southern School of Photography, McMinnville, Tenn., assisted by his son, Mr. J. M. Lively.

One can hardly conceive the many obstacles to be overcome before these enormous negatives and prints were made.

The camera in which the negatives were made was specially made for the purpose, and in shape is not unlike a "Brownie," but many times larger, being ten feet long by six and one-half high and five and one-half feet wide, mounted on rollers. The plates were made by the Seed Dry Plate Co. to special order, each plate weighing fifty pounds, and were coated by hand on plate glass with the regular 26x emulsion. The subject was posed on a movable platform. Spacing was done by raising and lowering the lens board. The focussing and putting plates into position was done by two men inside the camera. The exposure was made by daylight and flashlight, daylight alone being too slow, owing to the distance of the plate from the lens. The first negative required eleven gallons of developer, costing three and one-half dollars; the remaining negatives and transparencies did not require quite so much developer. The carbon prints were made from a specially ordered paper, being much larger than the largest stock size.

The portraits are the largest that have been shown at a convention and are one and a quarter times as large as the subjects. Remarkable success was attained, the negatives, transparencies, contact method, and carbon prints being absolutely free from air-bells or other defects. Needless to say, they attracted much attention and were greatly admired for their splendid quality as well as their great size.

We congratulate Mr. Lively and his son on their wonderful success.

---

SINCE the introduction of flashlight powder no greater convenience has been offered the photographer than the Towles-Schofield Smokeless Automatic Flashlight Machine. It has a long name, but the machine is simplicity itself and produces all the light necessary at any time and any place and is absolutely free from the two chief drawbacks to open flashes, smoke and dust. It carries twelve exposures or cartridges, which are loaded automatically, and there is no danger as in the case of open firing machines. The machine is compact and portable, takes up little room in the studio, and packs into two small carrying cases ready for home portrait calls. The machine complete, with two leather-covered carrying cases, costs only $40, and is a necessity in every studio. Write the Towles-Schofield Co., Evans Building, Washington, D. C., for a copy of their booklet, *The Greatest Light in Darkness.*

# WILSON'S PHOTOGRAPHIC MAGAZINE

A MONTHLY MAGAZINE FOR PRACTICAL PHOTOGRAPHERS

Founded in 1864 by EDWARD L. WILSON
MRS. EDWARD L. WILSON, Publisher and Proprietor
L. WINIFRED WILSON AND T. DIXON TENNANT, Editors

EDWARD L. WILSON, 122 EAST TWENTY-FIFTH STREET, NEW YORK
*Entered at New York Post-office as Second-class Matter*

Yearly subscription in advance, United States and Mexico, $3.00; Canada, $3.25; Foreign Countries, $3.50. Single copies, 25 cents. Subscriptions begin with current issue unless otherwise ordered. Original manuscripts on photographic subjects are solicited, and, if accepted, will be paid for on publication.


## EDITORS' TABLE.

THE ASSOCIATED PHOTOGRAPHERS of WEST VIRGINIA hold their first annual meeting at Grafton, W. Va., October 10 and 11. President A. T. Proctor has arranged a very clever and interesting program for the two days that should attract every photographer in the State. Mr. Dudley Hoyt, New York's famous photographer, has promised to give a demonstration. President Harris and Will Towles, of Washington, will also be there. The manufacturers are to be well represented and much practical work will be crowded into the two days. One meeting will be devoted to the criticism of the pictures on exhibition by a competent artist, when their good and bad qualities will be pointed out, offering a splendid chance to the man who is seeking to improve his work. In addition to the members' pictures there will be on exhibition fine pictures loaned by the best workers at home and abroad. The officers of this new association are A. T. Proctor, Huntingdon, W. Va., President; J. E. Giffon, Wheeling, W. Va., Vice-President; W. R. Loar, Grafton, W. Va., Treasurer, and Friend Cochrane, Secretary.

---

*The Association Annual* gets finer with each succeeding issue, and the 1911 issue, mailed to members of the Photographers' Association of America just before the Convention, is a fine piece of work and reflects great credit upon the Association which published it and upon Mr. J. C. Abel who produced it.

The half-tone reproductions of selected pictures are generous in size and beautifully reproduced: the articles are unusually interesting appearance of the book show a studied atten- and helpful; while the make-up and general tion to details that is seldom met with in books of this class.

PHOTOGRAPHERS who are considering the advisability of raising their prices should take courage from the recent advertisement of a prominent New York photographer, which reads, "Photographs as Low as Forty-five Dollars the Dozen." If they come as low as that, Heaven knows how high they go! But why quote photographs, especially the forty-five dollar variety—like eggs or oranges—by the dozen? A photographer getting those prices should be an artist and not a wholesale print seller.

---

"WHAT IS WHISKEY?" was a puzzling question only recently settled. The new puzzle would seem to be, What is a "part" owner of a studio? Under the Constitution of the P. A. of A. he is entitled to full membership in the Association. Half of New England's delegation to the Congress of Photography was a "part owner" of a studio what time he wasn't a full-fledged New York photographic editor. We would like to have "part owner" defined.

---

NO wonder platinum papers come high. This most precious metal is becoming scarce. Its chief source is the Ural Mountains of Russia. About one per cent. of the total supply is found in the United States, and small quantities in Canada and Columbia. Recent prices are $43 per ounce for hard metal and $41 per ounce for soft metal. This is rather more than twice the price of gold, which is $20.67 per ounce.

THE Photographers' Association of Virginia and the Carolinas will hold its Convention at Asheville, N. C., September 26 to 29. The Illinois Association will meet from October 17 to 20 at Springfield, Ill.

PLATE I

By HOWARD D. BEACH, Buffalo, N. Y.

*Illustrating Sidney Allan's Article*

# WILSON'S PHOTOGRAPHIC MAGAZINE

FOUNDED IN 1864 BY EDWARD L. WILSON

VOL. XLVIII OCTOBER, 1911 No. 658

## THE NEW ENGLAND CONVENTION

THE fourteenth annual convention of the Photographers' Association of New England will go down in history as the unconventional convention. President Garo has achieved the seemingly impossible: He put new life into the almost defunct New England Association and made the dry bones live.

Realizing the bigness of the task before him, President Garo threw precedent to the winds and came out with a program of innovations which, helped out by a vigorous advertising campaign, brought the New England Association into the front rank.

A feature of this unique convention was the almost total absence of a defined and detailed program of the usual convention lectures and demonstrations. President Garo's two big promises were, however, more than fulfilled; we refer to the old-time convention spirit and the picture exhibit. The former was much in evidence, and President Garo is to be congratulated on one of the finest picture exhibits ever gathered together for a convention, and a better lot of pictures were never hung to better advantage.

The attendance, though hardly as big as anticipated, broke all records for New England, over seven hundred membership buttons being issued. Testifying to the immense personal popularity of President Garo was the unusual number of prominent photographers from all parts of the country.

The break-away from Boston as the convention city was a wise step; but it is questionable whether Bridgeport with its cramped facilities did not hold back the fourteenth annual meeting from being even a greater success. From the manufacturer's point of view, it is questionable whether it is good business to spread a convention over such a scattered area. Only the fine weather conditions, and none too warm at that, saved many of the manufacturers and dealers from loss and much inconvenience. As to the amount of business done we heard the Convention variously described, from "most restful" to "fairly busy." Conditions were against good business, and the holding of an open air, seaside convention as late as the middle of September is taking long chances on comfortable weather.

Of course, all the promises made in the somewhat Barnumesque adver-

tising were not carried through, but that is not to be expected; but in the main it was a splendid big show and has done much to restore the New England Association to its rightful place—second to the "National."

We must congratulate the Association on its 1911 *Year-Book*. Of late years the souvenir program lacked all the qualities that would make it prized as a souvenir. The *Year-Book* for 1911, with its cream and gold cover, Triple A, Eastman etching sepia, Cyko, and Artura Iris inserts, makes a strikingly handsome book, which reflects credit on the Association and Carl E. Ackerman its designer and producer.

The Convention was called to order at 2.30 P.M., Tuesday, September 12, by President Garo. The Mayor of Bridgeport welcomed the Association and M. B. Parkinson responded on behalf of the Association. Secretary Hastings then presented Mr. Garo with a handsome silver-mounted gavel, after which the President made his address (which we print below), and the first session was adjourned. In the evening the annual dance was held in the exhibition hall and enjoyed by those present.

Wednesday was New York day, and incidentally the busiest day of the Convention. A large delegation from New York, 125 strong, headed by a brass band, marched into the park at 10.30 A.M., and added considerably to the festivities. At noon the official group photograph was made by J. H. Seeley, of Bridgeport. A circut camera was used, and a very fine print 12 by 36 inches produced. During the afternoon demonstrations and brief talks were given by C. W. Hearn, Wm. H. Rau, Dudley Hoyt, P. MacDonald, Elias Goldensky, and E. E. Doty.

Thursday was devoted to the manufacturers and dealers. The attendance and interest displayed was not excessive. In the afternoon the big event was a baseball game, photographers *vs.* manufacturers, providing much amusement. The evening was devoted to an illustrated lecture by Oliver Lippincott, of New York, followed by Carl Ackerman's lecture on "Home Portraiture." In another part of the hotel the New York dealers were banqueting, speeches being made by President Garo, Mayor Buckingham, President Harris, H. Bennet (President of the New York Dealers Association), Thomas Bedding, and G. W. Topliff, of the Ansco Company.

Friday was the one day when the weather was unkind; a raw, cold wind with rain made it very unpleasant out-of-doors. As the big feature of the day—a sheep roast tendered by the Photographers' Club of Bridgeport—was held under cover, but little inconvenience was felt and it was a big success. The business session was called for 10.30 A.M., and proceeded to elect officers and decide upon its next meeting place.

President Garo having positively declined to stand for reëlection, the following were elected unanimously:

President, F. A. Frizell, Dorchester, Mass.; First Vice-President, A. Allyn Bishop, Newport, Vt.; Second Vice-President, D. J. Bordeaux, Springfield, Mass.; Secretary, Geo. H. Hastings, Haverhill, Mass.; Treasurer, W. H. Partridge, Boston, Mass.

State Vice-Presidents: Maritime Provinces, J. E. Sponagle, Truro, N. S.; Maine, Harry N. Allen, Livermore Falls; New Hampshire, W. H. Mannahan, Jr., Hillsboro; Vermont, C. Bau, Montpelier; Rhode Island, John Sabine, Providence; Connecticut, Charles A. Altman, New Haven.

It was decided that the next convention be held at Springfield, Mass.

This seems a very wise choice; the city is building and offers free a fine convention hall, and there is ample hotel accommodation to meet every demand.

The 1911 Convention then adjourned.

### *An Interesting Project*

After the close of the convention on Friday P.M., a very laudable project was instigated by President Garo to consider ways and means by which a home for aged members of the profession might be instituted, and the following committee which is in sympathy with the effort will coöperate in trying to solve the problem. It is intended that this home will also serve as a museum, showing the different stages of the art as it has progressed, with the means employed in producing the different varieties of pictures and continuation of same from year to year.

The Committee—Photographers: H. H. Pierce, Boston; J. C. Strauss, St. Louis; Dudley Hoyt, New York; P. MacDonald, New York; E. Goldensky, Philadelphia; William H. Rau, Philadelphia; Col. Theo. Marceau, New York; J. P. Haley, Bridgeport; E. B. Core, New York; and B. Frank Moore, Cleveland. Manufacturers: G. Cramer, St. Louis; C. O. Lovell, Boston; Harry Fell, Rochester; Harry Haight, Boston; George Murphy, New York; George L. Barrows, New York; Lon F. Morris, St. Louis; Frank Wilmot, Rochester. Press: Carl E. Ackerman, New York; Dr. Malcolm Dean Miller, Boston; F. V. Chambers, Philadelphia; F. R. Fraprie, Boston; and T. D. Tennant, New York.

### *President Garo's Address*

It is my pleasant duty to welcome you one and all to this the fourteenth convention of the Photographers' Association of New England. To extend this cordial greeting to such a distinguished body of men and women photographers is, indeed, an honor and one that I deeply appreciate. Rarely does it happen that a more enlightened or finer group of men and women could be gathered together. Remember that the word "Welcome" is spread upon the doormat of this Convention. As this is the first opportunity I have had since July, 1910, when you elected me to the honorable position of President, to thank you collectively, I now make such acknowledgment. Were I not appreciative of the honor you have conferred upon me by entrusting to my care the welfare of your Association, I would indeed be lacking in gratitude. Your trust and faith in me has not been forgotten. The kindly sentiments shown by all of you, the willingness to help, and your presence here, so eloquent of good fellowship, produce emotions that I am unable to express. I have tried to live up to the promise made to you when elected, and in planning this convention my aim has been to make it a live-wire convention that would mark an epoch in the history of the New England Association. We live in an age that takes nothing for granted. We have paid dearly in the past for wooden nutmegs, dress-parade pictures, and counterfeit presentments of our sitters. And now we must show the world that we have the goods, or we don't get by as a profession.

You must be live wires, in touch with everything progressively photographic, if you hope to succeed. How can you expect the world to believe in you if you lack faith in your own power and destiny? And if this convention does nothing more than to inspire you with this faith and confidence in your chosen art, it will

have done much. Our pilgrimage to this island and the Temple of Art, so to speak, that we have erected here will not have been built in vain. At this shrine we have laid our contributions and offerings. Some of us have come from far-off lands to quench our thirst for artistic knowledge, and behold before us are the fountains of pictorial beauty where we may drink to our heart's content.

Let us then improve every minute and every hour that we are here, striving to uncover and master the secret of art in photography. Keep playing the game if you want to win. Your won't buy a motor car unless it has a record for endurance. Why then should you expect to become a good photographer unless you prove yourself by hard work? The game of photography is like a game of solitaire, you can't cheat without cheating yourself.

The principal motive of the managing board this year has been to bring together the finest, largest variety of photographic work possible. For this reason, I have asked the coöperation of many noted amateur picture-makers. Many of their works, I confess, have been an inspiration to me. Passing through this Temple, and seeing all the expressions of the camera, we hear remarks of admiration and appreciation. We admire those who have arrived, and we appreciate those who have endeavored to get there. Here I take the opportunity to suggest that the man who has arrived take the other by the hand and tender all assistance he can, as this, in my judgment, is the only way to improve photography and perpetuate its artistic possibilities. The only way to become successful is to help others to success; the only way of giving to the world at the conclusion of the twentieth century positive results of artistic photography. Remember that no one but an aviator has a right to look down upon others.

Photography is not art, only a medium of expression, and becomes art only when expressed by an artist. Mechanical and chemical perfection should only be our alphabet, and we must study it profoundly only from the ideal side, and with this thought of expression always in mind we cannot be kept within narrow confines.

We have followed accepted rules of picture-making long enough. Some of the works hanging on our walls today are by men who have outgrown tradition; they make rules for themselves, and after all, why not? Unless we free ourselves from the bonds of tradition we will always be the echo of the past.

Individuality is the chief equipment of the artist, and definite personal expression his distinctive merit. It is individuality and character in works that have created the large variety of schools of art. It is the character and individuality in works of art that designate Tintoretto from Rembrandt, Velasquez from da Vinci, and many others. Why should not this be realized in portrait photography? If a brother struggler happens to hang a picture on our walls, and if we fail to understand it, is there any reason why he should be ridiculed? Do we know it all? Woe to him who does! I admit we are often governed by set rules of technique, and there is the evil which we must of necessity overcome. He may be the very one to introduce an entirely new school, for has not all art and any work of importance had a beginning? Personally, I would rather see fifty crude things through which the maker's soul shines than see one thousand so-called finished things, each the echo of the other.

In conclusion, I would say, be true to yourself; have the courage of your convictions; establish your own style; put into it your personal power. Then you have something distinctive. Study and analyze the works of others, but let them be incentives rather than motives. To know a man's character, study the work he does unconsciously.

I do not know of any profession in which there is greater opportunity for studying the world and our surroundings than we have at our disposal. We are trying, all of us, to do artistic work—an honorable ambition. We cannot attain any height if we have not purity of soul, bigness of heart, broadness of mind, and faith in the future of our art.

### *An Interesting Letter from Alfred Stieglitz*

DEAR MR. GARO:

For some reason or other your very kind letter dated July 5 only reached me yesterday evening. I hasten to acknowledge its receipt for fear that you might misconstrue my innocent silence as non-appreciation of your more than kind words. Were I in America I would gladly come to Bridgeport this year to show the professional photographers of America that my sympathies are with all those honestly endeavoring to dignify the profession of photography. As it is, you can see it is impossible for me to be of use, nor is it possible to let you have a paper on such notice. But I believe these lines will reach you before or during the Convention, and you may tell the men that the only way, I believe, they can serve photography is in being true to themselves. Photography has proved itself a medium of personal expression; it has proved that over and over again for some years past. In my travels, in my experience, which is a wide one, I find that in the more cultured circles (and they are the only ones that count in the long run) photography is respected. To keep this hard-earned respect is the work before the photographic community. This respect it can keep only through its work. The days of words, claims, and bluff are over; it is the result that counts. If I am in any way responsible in bringing about this state of affairs, it is because I believe in photography and in the human race.

It was faith which won the battle for us all. Photography is a much more wonderful medium of expression than its staunchest adherents realize today. As I travel and study what art has accomplished in the various countries and what nature really means and is, photography's possibilities assume gigantic proportions. It is to the men who understand nature and love it, and who love photography, that the future will bring about revelations little dreamed of today. These are not idle words nor idle predictions. If my faith and my enthusiasm will encourage the professional of America to still worthier efforts, good as the past may have been, I shall feel that he has helped the cause we all believe in.

Wishing the Convention all success,
I remain, sincerly yours,
ALFRED STIEGLITZ.

NOTE.—A bit of advice: Tell your men that in my opinion the most difficult problem in photography is to *learn* to see. All else is comparatively simple, and one can only learn to see through comparison, through contrast. That is every artist's greatest secret.

MONTREUX, PALACE HOTEL,
AUGUST 31, 1911.

## MANUFACTURERS AND DEALERS AT BRIDGEPORT

THE manufacturers and dealers made a big display at the Bridgeport Convention, but it was not so apparent as it might have been had they not been scattered over such a mixed array of buildings.

*Abel's Photographic Weekly* was represented by J. C. Abel, who made his first convention appearance since his recent illness; *American Photography*, F. R. Fraprie; *Camera and Bulletin of Photography*, F. V. Chambers; *Photo-Era*, W. A. French and Dr. Malcolm D. Miller; *The Photo-Miniature*, Edward Rock; *Photographic News*, Carl Ackerman and Thomas Bedding, F.R.P.S.; WILSON'S PHOTOGRAPHIC MAGAZINE, T. D. Tennant.

*Ansco Company*, Binghamton, N. Y., with a complete showing of Cyko papers, including the popular linen-surface paper, white and hand-colored. This staff included Mr. G. W. Topliff, W. B. Mussen, F. N. and W. R. Leache, F. C. Muller, J. D. Rice, J. N. Doherty, and A. B. Cross.

*C. P. Goerz Optical Co.*, New York, with manager F. Schmid in charge. A feature of this exhibit was a display of lenses in various stages of manufacture. The 16 by 20 enlargements from Tenax Vest Pocket negatives were much admired and demonstrated the capabilities of this remarkable little instrument.

*The Sprague and Hathaway Co.*, West Somerville, Mass., showing a line of their unusually fine enlarging and color work, Mr. George Woodward looking after the company's interests.

*Robey-French Co.*, Boston, Mass., represented by H. D. Haight, F. Q. Avery, G. A. McLaughlin, and assisted by Paul Favour and Harry Fincke, of the Eastman Company, made one of the largest and most comprehensive shows on the Island, covering the professional's needs in every detail. "Photo-Flat," the firm's latest specialty, brushed over the back of unmounted prints is a sure preventive of the curl nuisance.

*Taprell, Loomis & Co.*, Chicago, had, as usual, an interesting display of new mounts and calendar cards. W. A. Taprell in charge.

*The Eastman Kodak Co.*, Rochester, as befitting the premier photographic concern, made a splendid showing and was well represented by a large staff of experts, headed by F. S. Noble, assistant treasurer; C. F. Ames, general sales manager; L. B. Jones, advertising manager; Harry Fell, chief conventioner; and Spencer B. Hord, assistant advertising manager. Representing the various divisions were: Joseph di Nunzio, M. A. Yanch, H. F. Arnold, C. P. Leake, F. L. Andrews, J. Evanoff, E. J. Arthur, Joxie Collins, J. C. Neely, G. M. Bolton, H. E. Niles, C. Hutchinson, W. Bent, H. C. Fincke, and Paul Favour. The magnificient display of prints on artura, etching, black and sepia, American platinum, azo, and velox, from negatives by prominent workers, is an enjoyable show in itself. One of the most striking of the Eastman exhibits was the case of negatives and transparencies on Seed plates, many of them made at St. Paul by Herr Dührkoop; they were wonderfully clean and brilliant and attracted much attention. Near by were the huge carbon prints from Mr. Lively's larger-than-life negatives, made on Seed plates 30 by 60.

*Central Dry Plate Co.*, St. Louis, Mo. Lon Morris, George T. Bassett, F. Whipple, and W. Murphy were busy talking up their new product

and showing some fine prints from "Central" negatives.

*G. Cramer Dry Plate Co.*, St. Louis, with Ma and Pa Cramer, assisted by Stewart Carrick, E. D. Wright, and R. P. Brackett, were greeting old friends and making new ones.

*Multispeed Shutter Co.*, New York, Gustave Dietz and A. H. Hotte, showing all models of this speedy shutter and demonstrating its use in connection with flashlight work for either day or night work.

*The Berlin Aniline Works*, of New York, with Mr. George L. Burrows in charge of a big display of the celebrated "Agfa" specialities, including the "Agfa" flashlamp, and Blitzlicht powder. Copies of the "Agfa" *Book of Formulæ*, and "Agfa" *Flashlight Book* were given away as souvenirs.

*Bausch & Lomb Optical Co.*, Rochester, N. Y. Mr. A. K. Hanks and Mrs. Hanks, with a booth of attractive pictures demonstrating the good qualities of the Portrait Unars and Bausch and Lomb Zeiss Tessors. A new model Balopticon was on display. It can be used for either opaque or transparent projection. That useful little booklet, *What Lens Shall I Buy?* was being distributed. (Those of our readers who have not had a copy would do well to write to the company for one.)

*The Rotograph Paper Co.*, Philadelphia, with Max Adler in charge, showing a variety of bromide papers and paper negatives.

*Ralph Harris & Co.*, of New York and Boston, were showing Wellington and Ward's English specialities.

*Magnet Photo Materials Co.*, of Boston, Mass. C. O. Lovell and Ray Burrows with a fine display of work produced by the Magnet dry plate color-non, Magnet Ortho, and Magnet Triple X.

*The A. M. Collins Co.*, Philadelphia, with Howard Stone, J. King, and S. C. Wright, showing the latest specialties of this well-known mount concern.

*Frank J. Curry*, Philadelphia, Pa., was showing a clever arrangement of a non-collapsible, compact, and rigid tripod for home portraiture; packs easily into a suitcase and carries an 11 by 14 camera without vibration.

*Secretary George H. Hastings*, Haverhill, Mass., has a new and clever card index system for studio use, which was shown by a representative.

*B. Oshrin & Bro.*, New York, a new photographic mount concern, showing a full line.

*The Taylor-Hobson Co.*, of New York, represented by their sales manager, Mr. L. L. Kellsey. While unable to show a line of the famous Cooke lenses, owing to the difficulty of keeping the supply equal to the demand, Mr. Kellsey was taking ample care to fully inform all inquirers of the many virtues of the Cooke line. We understand that Mr. J. R. Taylor has just returned from a visit to the English factory, where he made arrangements for a largely increased supply of Cooke lenses to cover the big demand for this popular objective.

*The G. M. Dye Printing Machine Co.*, of Minneapolis, with Mr. C. F. Potter, Jr., G. E. Carr, and F. W. Loomis in charge, showing two models of the autopress, never failed to hold a big crowd while the machines were in operation. The simplicity of operation, evenness of results, and wonderful speed which the autopress develops is astonishing. The machine is as speedy and as automatic as a printing press. It is made in 8 by 10, 11 by 14, and special postcard size, the latter with an automatic tank developing system for turning out big editions in extra quick time.

*George Murphy, Inc.*, of New York, had the biggest convention display they yet made. Their very full line of

professional specialties included Ross lenses, Autotype carbon tissues, Percy King light controller, Probus paint, backgrounds, enlarging lanterns, etc. They also showed some fine color transparencies from Dufay dioptichrome plates, for which they are trade agents. The house was represented by Mr. J. G. Lavender, Howe, Temple, Bunker, and Kuhn. Mr. George Murphy brought up the New York delegation and was receiving old friends on New York day.

*Ernest Oeser & Co.*, New York, represented by Mr. E. A. Laver and I. Nacht, were showing a line of fine imported mounts.

*The Hammer Dry Plate Co.*, of St. Louis—Fred Hammer, Jr., and C. Shaefer—with a fine exhibit of work by W. H. Towles, Gebhardt Sisters, Doty, and Mary Carnell, from negatives on Hammer plates.

*The Artex Photo Paper Co.*, of Columbus, Ohio, represented by G. H. Harkrader, showing handsome prints on Artex paper, a new developing paper recently put on the market.

*Schering & Glatz*, New York, represented by Mr. and Mrs. Nourse and Mr. A. Stiefel, with a full line ot photographic chemicals, including satropol, satrop, varitone, tablets, duratol, etc. Samples were handed out to all comers.

*The Haloid Co.*, of Rochester, represented by Mr. C. H. Daws and R. J. Wilson, showing splendid prints on Haloid extra, their latest product.

*The Wollensak Optical Co.*, of Rochester, N. Y., was represented by Oliver Bodine, showing the new Verito F/5 and the series II velostigmat with diffusing device.

*Defender Photo Supply Co.*, of Rochester, N. Y., were well represented by Frank Wilmott, president, R. W. Palmer, advertising manager, J. G. Gallagher, New York, R. L. Ennis, Boston, and W. Palmer, Pittsburg. Their show included many fine samples of Argo gaslight, Triple A, and Monox bromide, also examples of what the Vulcan, Defender-ortho, and Defender non-halation plates can be made to do. They made a very interesting display.

*Seneca Camera Mfg. Co.*, of Rochester, N. Y. F. K. Townsend and Louis Weil in charge of an interesting display of Seneca cameras and accessories, including their new improved Seneca view outfit and the ingenious Simplex plateholder. Though the Seneca display comes last it was the first on passing the entrance gates. We seem to have reversed our note book and recorded from the tail of the procession to the head.

## LIGHT AND SHADE AS APPLIED TO PHOTOGRAPHY

BY ALYN WILLIAMS

*President of the Royal Society of Miniature Painters of Great Britain*

[ONE of the good things promised for the St. Paul Convention was to have been a lecture by Mr. Alyn Williams, President of the Royal Society of Miniature Painters of Great Britain, on "A Painter's Views upon the Different Forms of Composition and Light and Shade as applied to Photography." Owing to sickness and the necessity of an operation, Mr. Williams was unfortunately unable to be at St. Paul. Through the courtesy of President

Harris we are enabled to print the lecture as prepared by Mr. Williams for the St. Paul Convention.—EDS. W. P. M.]

WHEN your great countryman, Whistler, was complimented on one of his pictures being so close to nature, he deliciously retorted that "Nature was creeping up." The photographer might well take this to himself, for his art has crept up and made for herself a place with the sister arts—delighting and astounding everyone by its artistic charm, its variety of effects, and introducing not only tone and temperament, but the very individuality of the man into his work. The photographer seems to be working side by side with the artist—gleaning where he has gleaned, and studying from the point of view where he has studied. Whether artist or photographer, we are, like the philosopher of old, seeking for the subtle something; but, alas! there is no royal road in art, and each must be content to work to the bitter end. We are all after the one thing, and that is to make our work *appeal*. We are often deeply attracted by a picture, *attracted* even before we are conscious of its color harmony, chiaroscuro, drawing, or technique. This indefinite something, when we analyze it, turns out to be a very definite quality: It is the general plan or disposition of the surface of a picture, placing and emphasizing to the very best possible advantage the composite matter of the work we are producing. This spacing into a harmonious whole, giving its masses their due proportion, balancing its noble lines, is the foundation and essence of nearly all the finest and best art. No mere blandishments of brushwork, tricks of color, or firework dexterity of technique built on a poor design can cope with the allurement of a nobly planned work. If our design is to have allurement it must contain some element of the sense of life, some vital force of striking and dominant power, with a definite characterization, and our composition something of the unusual and unexpected, not the elemental precepts of the horizon occupying one-third and so on; but like unto the Japanese, whose well-planned scenes and simple lines so often disturb and startle us into admiration. One does not wonder that their work has so successfully influenced our own artists. Do you recall the "Avenue," by Hobbema? What a magnificent example of planning—the tall trees rising against the sky, all their stiffness vanishing by the connecting and sweeping curves of the clouds! "The Windmill," by Crome? Many a small picture by this means is enlarged to colossal proportions, with a distinction that many a large and vapid work forever despairs of. Whistler understood this to the full, spacing his work with a deftness and sureness that made his slender material seem all-sufficing. Millet and Puvis de Chavannes, in their respective methods, had the same grand and soul-stirring feeling.

Any photo or drawing can be experimented upon by placing pieces of paper around it, and so altering its proportions by continual shifting, which enables us to see that each spacing has its own approximate set of proportions. And there is no definite but a very flexible rule: Quietness and restfulness are acquired by large blank spaces (forcefulness and vigor creep in the more these are filled up); the sense of repose which every true work of art must have—this feeling of dignity and breeding which most portrait painters desire and which the finest exponent of this art carried to its utmost point. Velasquez by making the setting of his subject a plain wall and vacant floor

space ensured that grand and stately air with which his work abounds.

A good picture well composed has one prominent subject, not two or three clashing and clamoring for recognition and disturbing the general effects. This principal feature should be focussed or placed near the centre (not the dead centre, as this would savor too much of the formal or religious composition), with secondary masses on either side by way of support to the central object. These, in their place, should not be too forceful or so large as to interfere with it. This predominance can still be forced by making it the principal light, strongest color or accented tone, and again by keeping this central object at the highest point, thereby still helping to focus this more than the secondary masses supporting it on either side. This then resolves itself into the pyramidal or, in other words, the triangular form of composition, on the basis of which nearly all the finest of our works of art are founded, and I feel it may well be asserted to be one of the great secrets governing all good and solid work. Nature has come to our help in the human body by making the head our chief centre of interest in all portrait work, to be naturally supported by the arms and body, giving us a well-sustained and pictorial composition, "the whole body fitly joined together and compacted." The apex of the triangle is again brought into the quadrilateral form by some slight object of interest—again, not too large or forceful to interfere with our central interest—introduced below its base. This form, which we will now call the diamond shape, can be further modified in its unessential details until we are brought into the oval, for our composition can always be further extended by more and more additions, which in themselves help to evolve lesser systems, creating a chain of mutual dependencies until it becomes a double, or a system within a system. The oval form is generally dangerous, leading us to discard the necessary firmness and strength that is so desirable for work of any pretensions. Also it is advisable to beware of the insidiousness of too many curves creeping in, which makes for flabbiness and restlessness; whereas our endeavor should be to see that our work has the vitality of life and vigor, which is best secured by sharp opposing lines. Diagonal lines are very helpful—sharp and forceful—and to convey this appearance again in a softer degree the curves of a spiral—and these judiciously used—are the means we must employ if our picture is to have the necessary movement, life, and motion. In portraiture, motion can be readily conveyed if the figure is placed to one side of the picture, giving the effect of coming or going by the direction of the turn of the head. Wind, rain, and storm can be emphasized by a line swinging from corner to corner across the work, everything going, as it were, out of the picture from the highest side of the diagonal line.

Both poetry and music, the sister arts, have taught us the value of rhythm in our work. This means a regular succession of motions, a repetition of our theme, this swinging recurrence emphasizing our points, making our color more harmonious, our vivacity more lively, and our quieter work more reposeful. Should our work be too restless, overstrained, and violent, a few lines—either vertical or horizontal—give the necessary repose to our composition, which should never have its fine masses and edges rounded off into too many soft curves, nor yet its fine strength of color, light, and shade reduced to get this effect of tranquillity.

The arrangement of our picture may

be broadly defined as consisting of tones of light, shade, and middle tint, and it is the management of the proper scattering and division of the subject in their big, well-connected pattern that helps to appeal to the eye when our picture is first seen. All its parts must blend, and, however full of complicated detail, no part must be overstrained so as to unduly stand out, disturbing the unity of the big masses. On light works our light can never be forced too much, but dark masses become unduly conspicuous and disfigure our picture until it appears as suffering from an excrescence of patches and blotches. Any sharp light, unless, as in a portrait, near the head, should be blended into the general groundwork; otherwise it will be a spot and blemish our picture, unless it be used near the principal object. Less sharp touches should be used as a means of balancing, say, the strong top light on the head, by a few secondary touches on hands, etc.

The effect of great virility is obtained when the brightest light is contrasted with the deepest dark; but this must receive due care, otherwise all breadth is gone from our work. Leonardo da Vinci, in his treatise, advocates the use of this contrast; but Sir Joshua Reynolds points out, in one of his *Discourses*, "the superior splendor and effect which has been produced by the exactly contrary conduct—by joining light to light and shadow to shadow." Thus after a number of years does this fine lesson of Sir Joshua's take effect, nearly all the modern men, studying from this standpoint, giving to their work the most artistic and brilliant results, using as they do the well-considered accent, an accent only of strong light and dark in its well-focussed and central position.

Mystery, or the sense of infinity, something beyond our immediate comprehension, is perhaps one of the most delightful and yet one that is often most lost sight of. When some of the London critics are trying to discover "the something more in art," the elucidation of this would help to solve the greater part of their problem—when the imagination is permitted to have full play, not as the impressionists would understand this, but the imagination that delights in the beauties of veiled suggestions with shadows partially revealing hidden lights, or the lights dimmed with faint shadows and perplexities and half obscured and will-o'-the-wisp objects that baffle us by their infinite variety. All this enchantment and more come from the subtleness that mystery casts over us, well calculated to excite our curiosity.

I wonder if the hint that the finest of the fine old masters was given us, and which seems to be but very dimly appreciated or felt, would be possible in photography? It seems an impossibility; but then so many impossible things have today become possible in the photographic world, that one wonders if this treatment of shadow, the means we have and use to define form, to make objects look round, solid, and substantial, making them project properly. Rembrandt found that shadow could be used as a mysterious veil, softening out and obliterating all blemishes and hardness, due to a too sharp definition, and that, by keeping his tones simple and comparatively flat, he could with the emphasis of his drawing give all the necessary solidity and sense of projection his subject demanded, proving that the less the *modelling the less the difficulty experienced in keeping his work to the grand manner*. Immediately this principle is departed from, the artist becomes engulfed in a multitudinous sea of dangers and compli-

cations that invariably lead to a want of success.

Now, one naturally asks why it is that in our search after effect we must bear in mind certain points that will help us; things that we are not always able to elucidate the why and wherefore; not possible for us emphatically to put our finger definitely on the reason; for instance, why it is that in our work all light masses placed on a dark ground on which they are strongly relieved have a charm of beauty of effect impossible to obtain by reversing the process? It may be that the dark object seen against a light background is silhouetted too strongly and is too insistent from its surroundings, and the object itself being more or less in tone does not offer the same possibility for a display of the infinite variety of effects that Nature's modelling always abounds in; that light and shade are nearly always eliminated. In our treatment of schemes of this description we can (although it is true at a certain sacrifice of our contrasts) considerably improve our subject by making our darker masses a tone lighter and by blending them into their surroundings wherever possible. This in its turn will help us in adding to our work a more beautiful and artistic charm, making it hang so much better together, while it will have acquired a degree of unity that would be impossible before. We must not lose sight of the fact that our picture should always contain this element of unity—which I may translate into the harmony which should exist in the pictorial expression, making a homogeneous whole. Now, designs worked in the inverse order—light objects on a dark ground—do not present the same obstacles to overcome, and the problem is solved with a greater beauty of effect. This is readily borne out by letting our imagination dwell on some of the works of Rembrandt, showing, as they do, the marvellous strength and subtlety acquired by this manner, never transgressing the relation which should be evinced in the proper interpretation both in the matter of nature and of art. For nature demands our ever-vigilant attention, lest our work become conventional and fall into mannerisms. On the other hand, due attention must be given to the art rendering, otherwise it may degenerate into bad and unworthy painting. I feel rather strongly that in our photographic work it would more than repay the experiment if all the darks, and these generally seem to be developed to their full and rather glaring intensity, could be kept better in hand—that is to say, under their usually strong tone—with the exception of where we wish to emphasize our dominant point of contrast, which, as I have explained before, is at the focus or centre of interest. Apart from the more artistic result of this, our design would become a great gainer in its general unity of effect with all the serenity of an added feeling of repose. This, naturally, when the work is very small, does not call for the same necessity of reduction in our tone values, for what would be a pleasure to the eye in a miniature form becomes unduly irritating as its proportion is increased.

I have touched here upon the effect to be gained by studying that our work should develop the proper sense of unity, but this in its turn must be governed by the fact that we must never introduce into any one work more than one kind of unity; for instance, in a subject where the figure or figures are treated with a degree of detail and finish, the background, if it be an interior view and wrought up to the same degree, will tend to come forward in a more or less turbulent manner. On the other hand, if we resort to an

impression in its treatment we may find we are becoming artificial and shallow, unless we use the same degree of impression in our rendering of the figure. We might here take a lesson from the works of Gainsborough, Reynolds, and Hogarth. In portraits this can be obviated by the introduction of a piece of tapestry, curtain, etc.

I shall make no long or exhaustive dissertation on color—in spite of its strong and persistent call, or the exquisite sympathy experienced from a glowing canvas—merely taking it in its relation to photography. I will start by black—not a color at all, you will say. True, but on account of the great love given to it by all the great portrait painters, I think it deserves first place, especially before the present company. Now, its general tendency in any work is to convey a grave and gloomy character, and should be kept to pictures in which the dim foreboding and awe-inspiring feeling is desired, and this diminishes in proportion to the elimination of this pigment until we arrive at the more gorgeous and lively hues into which a Fragonard might dip for his themes. Now, the introduction of a little red will give the impression of warmth and glow, which enhances its effect when certain values—as warm effects—are desired. Red, although a most beautiful color, is scarcely possible of being used in large proportions on a big scale on account of its irritant qualities. Certain colors lend themselves readily to the scheme we have in hand, and this should be carefully determined so that it harmonizes with the emotion it is intended to produce. Never could we imagine the glowing themes of Tintoretto suited to the restraint of Rembrandt, nor the warmth of Watteau with the weirdness of Whistler.

Yellow: A color of considerable beauty and luminosity, and where it prevails in any work—take for instance Turner's sun-warmed and translucent canvasses—is nearly always a certain factor of success; but this color demands a knowledge and care on the photographer's part to properly interpret, which behooves us to make use of the isochromatic plate and color screen; indeed, it is quite impossible to render a just effect of a painting without this or similar plates. A remarkable and well-considered work can be completely ruined by having all its tones transposed in the copy. Yet a good word must be said on the other side, when one sees a beautiful photograph from a picture; but when confronted with the original, a sudden revulsion of feeling is experienced, owing to the harsh, strident, and inharmonious coloring, perhaps from the cause that so many landscape painters omit black from their palette to get a greater feeling of vitality and life into their work.

Blue: A color of calm peacefulness and of a greater tranquillity when the tone approaches to a green hue. The French ultramarine, in which the red tone carries with it that color's irritating tendency; and green, again, is a quiet and composing color in large masses. The dark tone of the very virulent hue can be very exasperating, but when toned with brown becomes a soothing and far from unpleasant color.

Gray: Another color restful and soothing, especially when it inclines toward blue; but this in its turn can become too cold if our work be large. A most useful color for all purposes of photographic work, particularly in landscapes, for its aërial quality, which it suggests in a great variety of ways.

White: This, again, if used largely and indiscriminately, tends to coldness, and all men who have had the color sense well defined have used it with

the utmost discretion, only for the spot of particular emphasis, the other resolving itself into pale tones of color. Titian's picture, in the National Gallery, London, of "Bacchus and Ariadne," shows the painter's resourcefulness in this color direction, and while we are studying this picture, note the masterly manner in which the strong contrasts are so vigorously and indefinitely carried all through—the powerful oppositions of color. You will always find that in large masses of colors, where they are energetically opposed to one another, the effect is more grand and striking than when a greater degree of moderation is used and they are tenderly and carefully blended.

It would be rather invidious for me to attempt any suggestions on lighting, this field having been most thoroughly explored with the most beautiful and thoroughly satisfactory results, and I suppose no artist has helped more to this desirable end than Rembrandt, whose profound investigation penetrated deeply into the science of light and shade, bringing forth an almost melodramatic mystery of effects. As Shakespeare says:

> "Upon the corner of the room,
> There hangs a vaporous drop profound."

The forceful contrasts in later years gave place to a fine rhythmus, which in turn was succeeded by a more perfect fusion and greater realism, letting his great genius dwell on some special characteristic of the person before him, eliminating all unessentials until he probed for the soul, bringing it forth with supreme magic. This necessitated the sacrificing and casting off of the usual paraphernalia, color, the glorious and palpitating sunlight, and most things used to obtain artistic excellence.

In Reynolds we trace the strong influence emanating from Rembrandt—the methods of lighting his subjects (although he differed in never permitting the eyes to be in obscurity, but letting them tell out strong, distinctly)—his color patterns; their vague, reflected, and, semi-obscured lights, that give rein to the imagination—the quality of the masses, more than their apparent disposition, breathing forth the vibration of Nature's light, and all the mysterious and elusive tone of semi-illumined and partially darkened surfaces. *Quo fata vocant!* He is, indeed, a felicitous artist to whom Nature vouchsafes her artistic blessings.

## THE PERMANENCE OF PHOTOGRAPHIC PRINTS

### A Notable English Photographer on a Vital Topic

[THE following interesting paper, on a subject of special importance to every professional photographer, is from the pen of one of the leading professional photographers of England—Mr. Harold Baker, of Birmingham—and is reprinted from our contemporary, *Photography and Focus*. It is a subject that needs close attention.—EDS. W. P. M.]

THE question of permanence, or otherwise, of a photograph is an important question to many persons besides photographers. But I am afraid no one else takes any interest

in the subject, and probably very few photographers either. They accept the statements of the makers of the papers, and trouble very little more about it, unless it is brought home to them as forcibly as it was to a friend of mine, a professional photographer.

He began to notice that his albumin prints that were mounted and kept as specimens were becoming faded in yellow blotches, especially in the delicate parts. Very soon shoals of faded prints began to come in from customers, and for a long time he was worried out of his mind to discover the cause. At last, after some months of endeavor to solve the mystery, the cause was found. Many years before—for it was an old business—they made a practice of rubbing down the wet albumin prints with a smooth paper, known locally as "cap paper," procured from a local stationer. This had been going on for a long time, and no one had noticed that the price had steadily gone down, and what had once been a fairly pure paper had gradually been reduced in quality, until the finished paper was sent out full of "hypo," used by the paper makers to neutralize the bleaching chemicals; so that carefully washed prints, while wet, were rubbed down with paper saturated with hypo.

The question sometimes arises: Are *any* photographic prints permanent? The answer, of course, is that some are, some are doubtful, and some undoubtedly not.

Now, what prints are permanent? First, I should place keramic photographs, prepared by the "dusting on" process, burnt into an enamel surface, and glazed by further firing. I believe these are absolutely as permanent as can be desired. Carbon prints—oil and bromoil—provided the pigments used are stable and the paper of good quality, come next. We are told that in less than fifty years most of our new books will have crumbled to dust, especially those printed on "art paper." Photographs, however, should have a longer life, as the paper must be pure. Next in order of permanence I should put toned bromides, followed by untoned bromides, and next platinum prints.

Now, I have said it, and I quite expect that those who for so long have pinned their faith to platinum as an *absolutely* permanent process will rise and denounce me.

I have no doubt that I shall be completely crushed by the evidence of the *theoretical* permanence of platinum. I have not the slightest doubt that, in theory, a platinum print *is* quite permanent. But in actual practice I am quite certain that, sometimes, it is *not*. If the showcases of our southern seaside places are examined, scores of platinum prints may be seen which have faded in a peculiar granular manner. And I have had bromide and platinum prints exposed to sunshine and damp air, side by side, and the bromides have changed less than the platinum. I have seen platinum prints the color of brown paper all over; but that, one must admit, is not the fault of the process, but bad manipulation; the iron salts have not been removed from the paper by a proper use of the acid bath.

Early this year I had a large number of old photographs, by many processes, through my hands for mounting. Many were in bad condition, especially the gelatino-chloride prints; some of the albumen were in an excellent state of preservation. The bromides were good, none showed signs of fading, but some showed sulphurization, no doubt from gas fumes; while of the platinum some were excellent, but many had faded. The delicate tones in many had quite faded away to white paper; and, irony of fate! on the back, in aniline was the

mark, "Permanent photographs." I had seen some of these prints twenty years ago, and they were then found very beautiful, and they were produced by one who in his day was one of the largest printers in platinum in this country; and I am quite sure that he never would have sent out such feeble prints as they are now.

It is curious that some of the earlier albumen prints have lasted so well—far better than later prints. Some of my own early p.o.p. gelatino-chloride prints toned with gold have faded worse than albumen; while those toned with platinum salts began to go in a few months. Collodio-chloride prints seem to be far more permanent than gelatine; but I cannot believe they can be permanent when toned in an acid platinum bath. Plain salted paper (chloride), toned either with gold or platinum, is terribly fugitive, and will not last many months.

Self-toning papers are scarcely old enough for us to know much about them, but collodion is probably far more permanent than gelatine.

The methods used for mounting undoubtedly have a great influence on the permanence of photographs. For the wet method pure starch freshly prepared each day is the best. Ordinary flour paste should never be used, as it is so liable to become acid.

I had an excellent example of this under my notice only a few days ago. A toned bromide enlargement was sent out, unmounted, and was taken to a frame maker to be framed. He mounted with flour paste, probably not very fresh, and put it upon a piece of common cardboard. In a short time the white background had become stained, in patches, a beautiful sky-blue. The patches suggested that where the paste was thickest, the acidity had acted upon the traces of potassium ferricyanide remaining in the paper, and produced Prussian blue. There may also have been some chemical in the cardboard which had assisted the chemical reaction—possibly some form of iron.

The moral of this is always to use the dry mounting process, for several reasons. First, because an impermeable film is placed between the print and any impurities in the mount and, secondly, because there is no moisture in the mountant to assist chemical action between injurious substances in the mount and the print. There is an old saying that chemical action will only take place when water is present; and, although it is not strictly accurate, there is a great deal of truth in the idea. If a dry print is kept on a dry mount which contains injurious chemicals, the danger of damage to the print is fairly remote; but as soon as dampness comes on the scene, the chances of injury are very great.

Another moral to be learnt from this incident is the difficulty of removing potassium ferricyanide from a print, as many a bromoil worker knows to his sorrow; for after a print has been bleached, washed, passed through the acid bath, washed, fixed, and washed again, there will still remain sufficient ferricyanide to produce blue stains if a particle of iron falls on the wet print.

For mounting photographs, ordinary gum should never be used, as it rapidly becomes acid. I have seen albumen prints, attached at the corners to mounts, which had faded very badly where the gum had been applied to them. The mounting pastes which are sold for the purpose should be safe to use, as they are made specially for mounting photographs by firms of the best reputation. I have never seen any fading which could be traced to that source; but it seems to me that the new dry mounting process is a great aid to permanence.

PLATE II

By HOWARD D. BEACH, Buffalo, N. Y.

*Illustrating Sidney Allan's Article*

PLATE III

By HOWARD D. BEACH, Buffalo, N. Y.

*Illustrating Sidney Allan's Article*

PLATE IV

By HOWARD D. BEACH, Buffalo, N. Y.

*Illustrating Sidney Allan's Article*

PLATE V

By HOWARD D. BEACH, Buffalo, N. Y.

*Illustrating Sidney Allan's Article*

PLATE VI

By HOWARD D. BEACH, Buffalo, N. Y.

*Illustrating Sidney Allan's Article*

PLATE VII

By HOWARD D. BEACH, Buffalo, N. Y.

*Illustrating Sidney Allan's Article*

PLATE VIII

By HOWARD D. BEACH, Buffalo, N. Y.

*Illustrating Sidney Allan's Article*

WOLLENSAK VITAX, F.3.6

Copyright, 1911, Defender Photo Supply Co.

Made by DÜHRKOOP at the St. Paul Convention

*Vulcan Plate. Triple-A Print*

# SOME NEW IDEAS IN PORTRAIT PHOTOGRAPHY

## A Visit to the Studio of Howard D. Beach, Buffalo

BY SIDNEY ALLAN

HALF-A-DOZEN years ago few studios in the country were so favorably known to the profession as the Hall Studio in Buffalo. It was one of the sights of the town—at least to traveling photographers. It has lost none of its attractiveness with its present owner, Howard F. Beach. As one passes through Virginia Street, rich in lawns, trees, and glimpses of well-taken-care-of backyards (so characteristic of Buffalo's summer season), one easily notices the pleasing red structure with the little tower and the water running over the huge skylight to lower the temperature in the galleries. The building is as clever a combination of a studio and private dwelling as I have seen.

Although I cannot express particular admiration for the interior decoration of the studio—it somehow lacks unity of style—I was at once impressed by a certain air of practicability which seemed to pervade the place. Everything seemed to be there for a certain purpose. The arrangement of electric bulbs in the skylight, a device which won Mr. Beach the fifty-dollar prize for the most practical idea at one of the New York State conventions, provides at all times, under the most unfavorable atmospheric conditions, a quality of light that is equal to sunlight. It is even a trifle warmer, as it increases the luminosity of flesh tints when added to sunlight. Mr. Beach is of the opinion that the study of electric illumination would prove profitable to professionals, as a perfect control of lighting is one of the most important features in successful portrait photography. A mastery over the various vehicles of expression is desirable in any profession—why not in photography? To know a little more of contemporary art, of chemistry, of lens construction, etc., would harm no photographer. It would expand his views and make him a better craftsman.

There is, for instance, the subject of color. I always thought that a photographer should know how different color values will record on the plate. If he does not know what will happen in the transition from actuality to the finished print, how can he make a perfect composition? Contrast is so dependent on the harmony of local values, and the latter can be procured only by the proper juxtaposition of colors in the original. As we discussed these matters, I could not help wondering at the peculiar coloring of the studio walls—light orange and a dark green; a queer combination, and surely not pleasant to the eye; but they photograph well. Ah, now I begin to understand. I scrutinize the background: Impossible colors, among others a luminous pink; but the background takes its proper place in the finished prints (Figs. 1, 6, 7, and 8). In this studio the furniture, curtains, and screens are apparently selected with a forethought as to how they will look when photographed (Figs. 5 and 6). "I think more attention should be paid to the suggestion of color," Mr. Beach remarked. As I study his prints, I came to the conclusion that he is carrying out his own idea. I feel color in most of his prints (most

notably in Figs. 1 and 5). He does not strive for violent contrasts, like Hutchinson, for instance, but subtle values within a toned scheme.

Beach does not eschew detail; on the contrary, he is rather fond of displaying it. He probably realizes that the majority of the public have not yet arrived, in their pictorial appreciation, at a point where they prefer elimination and blurred effects to clear and normal delineation. And yet Beach's detail is never obtrusive, and his line work, although clear, always soft.

To me his manipulation of lines is the most interesting part of his work. He *draws* more (if this term be permissible) than most photographers. His poses are frequently unusual. In this respect, as well as in his lighting, he is a worthy competitor of Master Dührkoop. The more astonishing, I thought, that his line work is so precise and convincing. It generally looks natural, not forced. I asked how he went about it—how he could drape a figure so skilfully, as, for instance, Fig. 8, without tiring the sitter? He answered that he did it very quickly. He first lets the sitter assume a certain attitude, and then within a few seconds arranges the gown. Well, this ability must have been acquired; it cannot depend entirely on good taste and a quick eye. It may be due to the fact that Mr. Beach is somewhat of a painter himself, that he can draw, and that he is fond of making experiments in landscape and figure photography; but I think it rather the result of memory, that he has studied art sufficiently to apply the knowledge spontaneously.

"What decides you in selecting an attitude as the most favorable one?" I questioned him.

"I look for the most favorable light. Every face has one side which is more favorable to depiction than the other. In exactly the same light one side will look infinitely better than the other. I select the one that looks best. Then I experiment with the angle of light and the distance, until I discover the most perfect illumination that seems to me possible for the particular sitter I am dealing with at the time."

I must confess that I am not quite able to follow his theory. I understand that most physiognomies are irregular, that there is one favorable viewpoint, but I do not see how reflections could ever be eliminated to such an extent in any place that the light could be *exactly* the same when a face is turned to the right as when it is turned to the left. The differences must be very subtle, and I am, after all, of the opinion that it is more the selection of light than differences in facial construction. But a man who works in this fashion *thinks*, and that is an accomplishment we need very badly in portraiture. We must get away from routine poses and treatment, and compete with the best of painters in the invention of new attitudes and schemes of lighting.

I found two other qualities in Mr. Beach's work which seemed to me of particular interest. One is his treatment of eyes. He lays special stress upon their placing. They are, more than any other feature, the seat of animation and character. They ought to dominate the entire composition. You will notice a peculiar virility of expression in the eyes in nearly all the accompanying prints. And in order to handle them in that way one must be able to read the story they tell. In other words, one must be something of a physiognomist and character reader. Mr. Beach no doubt is; his work proves it.

The other quality is a certain plasticity of effect. The face in his pictures is always well modelled, and the main interest, despite the profusion of

detail, is concentrated upon it. How is this accomplished? By keeping a large part out of focus. Well, that is nothing new; it occurs in most photographic representations. Yes, but has it ever been used scientifically? In recent years some painters have invented what may be called the binocular technique. It is practised in this country by Paxton, of Boston, and Fosbery, of Buffalo. They double the verticel outlines of less important objects in the foreground or background, while the main object of interest is painted with scrupulous precision. The artists are copying natural conditions: If one looks hard at one object, and introduces between the point of interest and the eyes, or somewhere near it, another object, the latter becomes blurred and reflects either to the right or left its vertical outlines. You will see this very plainly in Fig. 2. The body is diffused; only the face and fingers are clear. And it is a natural law that the eye goes directly to those parts that show clear definition of lines. To have certain parts out of focus was ordinarily considered a shortcoming of photography; but it seems that it can be utilized to advantage if handled with forethought and skill.

Howard D. Beach, whose work has suggested the various ideas that are discussed in this article, is a man of restless activity and apparently endless resources. His versatile abilities are clearly revealed in his work. He has gained artistic as well as financial success. He has worked his way into public favor as no other Buffalo photographer has done, and he can rest assured that he will always remain one of the most interesting figures in the realm of professional photography.

## TANK DEVELOPMENT FROM THE PROFESSIONAL PHOTOGRAPHER'S POINT OF VIEW

THAT the tank method of development has proved its superiority for professional work over the older methods in every respect is now an unquestioned fact. Many progressive photographers have for some time been using it entirely, yet others, less venturesome, hesitate; they fear to take the plunge, and pack their plates in a tank to develop by themselves. This "fear"—and I experienced it—in my opinion, has not met with the sympathy of the manufacturers, and is responsible for tank development not catching on with the less venturesome. Had the makers introduced the tank with the suggestion that the plates could be examined from time to time to see if correct before passing to the hypo bath, photographers would have felt the satisfaction in their own judgment as to density, etc. In less than a week they would have been thoroughly convinced of the fact that, without troubling to look, they had complete control over both quality and density. The instructions sent out in most cases with tanks are to transfer the rack of plates bodily to the hypo bath. This I feel sure has prevented a good many would-be converts from attempting the system.

Some two years ago a friend of mine, to whom at last I made an offer to be entirely responsible for success, wrote me, after trial: "Have just developed my first batch by tank. It required some pluck to leave the plates alone, but they turned out splendidly." Now he uses two or three tanks, and is

fully convinced of the utility of the method as regards time saved, quality, and regularity of density of the negatives.

I started using my tank, some three years ago, for the simple reason that I thought, if nothing else, it would save stained fingers and considerable time shut up in the dark room.

### *A Tank—and How to Use It*

I selected an Eastman 7 by 5 tank, supplied with an adaptor, to bring the width to 4¾ inches for half-plates. When first using it, at the end of time named I withdrew the rack from the tank, held it under running water to rinse the plates, and attempted to remove them one at a time to have a look at them. Here I discovered a fault. The plates, being 6½ inches long, were ½ inch below the top surface of the rack, and the frame of the latter prevented me lifting them from the bottom. Ultimately I had to turn the rack upside-down, shoot the plates out like a pack of cards, with the result that several films were damaged. This nearly killed my faith in tank development, and I should have discarded it had I not thought of placing a ½-inch bar of wood across the bottom of the rack at right-angles to the plates. This enabled me to insert a finger under each plate from the side and raise it quickly and simply. Another advantage gained was by keeping the plates flush with the top: one can load quickly and surely, as the top edge of each plate clearly shows the groove occupied, whereas if the plates settle down ½ inch lower one cannot load without using the special wooden loading block supplied with tank for that purpose. This, I find, is not required, as, even in total darkness, with the plates flush to top, one can feel with certainty and load the rack in the correct order.

### *A Simple Pyro-soda Tank Developer*

The developer I have found most satisfactory is a very simple one. I make two *Winchester* quarts of stock solutions at a time:

A.

| | |
|---|---|
| Pyro . . . . . | 1 ounce. |
| Potass. metabisulphite, about | ¼ ounce. |
| Water up to . . . . . | 80 ounces. |

B.

| | |
|---|---|
| Soda carbonate . . . . . | 8 ounces. |
| Soda sulphite . . . . . | 8 ounces. |
| Water up to . . . . . | 80 ounces. |

For use I take 8 ounces of A and 6 ounces of B (= 14 ounces), and pour into tank, adding water to bring bulk up till it just covers the line specially marked on inside about 1 inch from the top. I might mention here the 14 ounces of developer, or proportionate quantities, is my ordinary developer for plates that I have to develop in an open dish, so that dilution is the only difference for tank use.

The best temperature is 65° F. Usually this is about the natural temperature of the water supply; but in the cooler days and winter I find the easiest and most reliable way is to heat the tank, when filled, over a gas ring, watching the thermometer standing in the solution gradually rise to the 65°.

### *Dark-room Manipulation*

In placing the rack in front of the dark-room lamp ready to receive plates it is well for the operator to stand it always in the same direction, so that he naturally falls into a regular method of working, and can therefore at once pick out a certain plate if required earlier than others.

I always stand the rack with the hinge falling back toward me both in filling and taking out plates. I place my box of exposed plates on my left,

and transfer to the rack, working from the left. I place eleven plates with the films inward, and the twelfth (the last) reversed, so that the two end plates are both glass outside. This, to prevent damage to films. By placing in this order there is no danger of the finger scratching the film on removing the plates, as the plate next to the one being raised has the glass side nearest, until the eleventh is being lifted, and then a little care only is necessary to prevent touching the film of the last.

Having filled the rack and fastened the hinge, it is lowered, without stop, into the tank containing developer. Then, still holding the loop, the rack is just agitated up and down about ten times without bringing it above the surface of the solution. This will effectually disperse any air bells that may have formed. After fastening the lid, set the hand on the dial face of tank to the time for the completion of development.

*Necessary Precautions*

The only attention during development is to turn the tank upside-down in about five minutes, and again reverse at the end of another five minutes. At times I have forgotten to do this, and have found no ill effects; but it is advisable, as it makes certain of the developer acting regularly. I should never advise fixing in the tank, as trouble might arise sooner or later.

At the end of time allowed for development, lift the rack and drain before removing. Then raise the lid and let water run well between the plates in the rack for about thirty seconds to remove the developer. Stand the rack in front of the lamp in the same position as in filling, with the hypo trough on the left. Then, by using the tip of the finger of the left hand, each plate can be easily raised, viewed against the lamp, and, if correct, passed into the hypo.

Very seldom it is necessary to replace in developer, unless the exposures are white background work.

As pointed out at first, viewing is not necessary, but I must admit there is a satisfaction in just glancing at each plate; it gives a sense that everything is under control.

I always use an acid fixing bath, which keeps the plates clean and hard during the warm weather, and, when finished, have always a batch of regular negatives for quick printing, and with good detail in the high lights of white dresses. It is necessary to rinse out the tank after developing, as instructed by makers. I always do so with hot water, and drain and wipe the tank dry each time of using. I have used the same tank for three years constantly.

My one and only trouble occurred last year, and then a certain batch of plates I had would not develop by tank without bringing out peculiar markings, though everything went quite normal when development was done in a dish as usual. Otherwise, I have not had a faulty plate—no air bubbles, finger marks, or developing stains. If I have more than one dozen exposed plates I use the same solution twice with success, seeing, of course, that the quantity is sufficient to cover the top of the rack, and that the temperature is correct. I should not suggest any further use, though I find developer after second use is quite colorless.

I need hardly point out that the usual care to avoid touching the surface of plates with the fingers applies to tank development quite as much as to any other method. The plates can be handled by the edges quite easily in filling the rack, and the surface of film need never be touched.

Both the photographer in the one-

man studio and the busy man in the large commercial way are using tanks with advantage. The former is spared a lot of waste time in the dark room; he keeps clean hands for operating, and has no dirty dishes with oxydized developer.

The commerical man is able to handle large batches of plates, for, once temperature and solution strength are arranged, a junior assistant can watch several dozens at once. Thus both these classes of workers secure the great advantage of regularity of printing—density and equality—which is greatly appreciated by the printer.

It leaves one entirely free to attend to exposure, because of the four factors three are regulated—viz., temperature, strength of developer, and time of development—and will always, under the same conditions, give similar results.

*Under- and Over-exposures*

I have been asked by several: "How do you get on with under- and over-exposed?" My reply is: However carefully I expose, I get them now and again, but find the tank gives me a good result, even if over- or under-exposed. The difference is in density which, if too marked, can be treated afterward advantageously with reducers, or intensified, according to the case; but one does not realize that in ordinary dish development the tendency—if the plate is under-exposed—is to continue development far beyond the point where maximum detail is obtained, and the result is hard and too contrasty. The reverse applies to over-exposure—the plate taken out too quickly—because it darkens rapidly. and it is, therefore, thin and flat. Now, the tank turns out the one certainly thin, but printable, and the other dense, but correct gradations. With practice in the studio—and it is for professional studio workers that this is written—one does not often get these extreme cases, and, with exposure kept within reasonable bounds, development by tank gives a far greater percentage of good, regular printing negatives than by dish development in the ordinary photographer's hands.

In conclusion I must again emphasize the necessity of careful attention to cleanliness, also to the strength of developer, temperature, and time, which must always be the same if similar results are to be looked for. If the photographer attends to these, he will find a developing tank a most reliable and cheap assistant.—GORDON CHASE, in *The British Journal of Photography*.

## PRINTING LIGHTS

BY A. E. SWOYER

THE increasing use of photography throughout the various arts and crafts has had a tendency not only to specialize the work along certain lines, but to render devices for the rapid and convenient execution of the different processes necessities rather than luxuries. The introduction of developing paper was the first great advance, and practically doubled the photographer's working time in placing not only evenings, but dark and stormy days as well, at his disposal.

Although the use of developing paper has become almost universal, however, sufficient progress has not been made

in the efficient and rapid manipulation of this medium. Printing lights are on the market, but defeat their own ends because the good ones are too expensive and the others not cheap at any price. To the photographer who desires to add to the convenience of his work without going to too great an expense, the writer suggests the construction of a combined rapid automatic printing light with an attached paper holder; a general description only is given, in order that more latitude may be given in modifying the apparatus to meet special uses.

The box, as shown in Fig. 1, is adapted to be placed upon the work table; the same scheme may be used in a device built into the table itself.

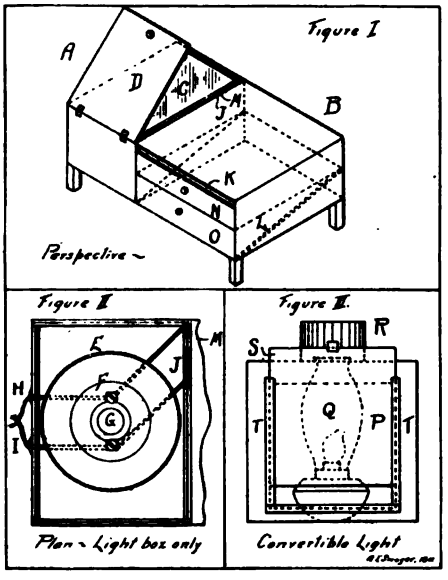


The left hand division of the box, as designated by the letter *A*, is the printing compartment, and is shown in detail in Fig. 2, the paper storage drawers not being shown in the latter figure, for convenience. This compartment should be as large as the largest negative apt to be used, the depth being about twice the diagonal of such negative. The top is left open, and the sides are bevelled or rabbeted as shown in order that a plate of clear or of ground glass may be supported as shown at *C*; a hinged cover, *D*, is provided, which should fit tightly down upon this glass and be provided with a felt pad in order to secure the absolute contact of paper and negative. In the centre of this compartment is mounted a single electric bulb, the Tungsten or Mazda type being especially recommended; this lamp is fitted either with a Holophane or a tin cone shade to serve as a reflector, the former being the more efficient. The lamp is wired as shown in Fig. 2, where *E* is the rim of the shade, *F* the lamp, and *G* the socket; the wires are marked *I*, and are shown in black, being led into the box through the socket bushings *H*. The loose ends of these wires are necessarily connected to an attachment plug, in order that current may be tapped from the main supply; the other ends of the wires are clamped under metal plates as shown in black at *J*. These plates should be of brass or copper, and must be mounted with a strip of hard rubber or of mica between them and the wood, the strip running under the gap between the two as well; on the door or hinged cover *D* must be mounted a single strip of metal of such size and in such a position that it will exactly fill the gap at *M* when the door is lowered. The purpose of these strips is to complete the circuit so that the door when closed will automatically turn the lights on; when opened, the circuit is broken and the lights go out. In order to prevent a waste of current, it is well to have the door work on a spring or to use spring hinges in order that it may be held open when not in use. To use this box, the negative and paper are placed on the glass plate as when regularly printing; the door is closed and held shut by the hand for

the printing period desired; on raising the door the lights are extinguished and printing, of course, discontinued in the same way. A ruby light must also be provided; one of the regular type may be employed, or a ruby incandescent bulb mounted on the outside of the box and the wires extended to it.

So far we have dealt only with a means for rapid printing, but in order to get the full advantage from such a device it is essential to provide some means for having a supply of sensitized paper close at hand, as well as a place for the convenient disposal of the exposed sheets in order that they may be all developed together when printing is completed, instead of attending to each sheet singly as soon as it is taken from the machine. The arrangement of suitable drawers is shown in compartment *B* of Fig. 1. The upper drawer is intended for the temporary holding of exposed sheets, and is cut away as shown at *K*, in order that they may be slipped into the drawer without the necessity of opening it; this slot should not be too wide, in order to minimize the danger of light striking the paper, even though the automatic switching of the light makes this seem impossible. The lower drawer *O* is intended for the supply of fresh paper, which should be removed from the package and stored loose, covered with a sheet of glass or of heavy card to prevent it from curling. If a sloping partition, *L*, as shown by the dotted lines, is placed in the drawer, the paper will always slide forward and be in easy reach of the hand.

It is no great exaggeration to assume that nine out of ten amateurs, and more than a few professionals, still print gaslight paper by waving the frame in front of the light, and then ducking behind a screen or turning out the light altogether in order to develop safely. The writer may be unusually lazy, but he much prefers to sit before a printing light, with trays of developer and hypo at hand; to expose, and develop the exposure, without leaving his seat; he calls it economy of time, which, if we may believe the proverb, is money. The device shown in Fig. 3 makes this possible; although shown fitted with an oil lamp, any illuminant may be used, or it may be built directly into the wall of the dark room instead of as a separate box.

It consists simply of a wooden box (which must be tin or asbestos lined, if gas or oil is used) with an opening, *P*, of suitable size cut in the front. On the inner side of this opening a piece of ground glass is fastened by tacks at the edges, and a sheet of ruby glass, *S*, is made to slide in the cleats *T*. The light *Q* is placed a distance a trifle greater than the diagonal of the negative back of this opening, and a ventilator, *R*, which may be a tin can with top and bottom cut off, provided; this ventilator should be high enough to prevent any direct rays from the lamp from reaching the table, though the light reflected from the ceiling will do no harm. In operation, the ruby glass is raised, being held up by slots in the cleats or in any other convenient manner, and the printing frame stood on edge in front of the opening; this leaves both hands free for dodging or manipulation, while by the use of two frames work may be done very rapidly. After exposure, the ruby glass is dropped, providing a perfectly safe light for development.

It is peculiar that such a convenient device has not been available commercially. The writer has protected by patent a variation of this device in connection with an enlarging and projection attachment for cameras, but even in the simple form shown it is a great convenience.

## THIRD CONGRESS OF PHOTOGRAPHY

### Held in Saint Paul, Minnesota, 1911

(Continued from page 430)

Mr. Ackerman: That is more than Theodore Roosevelt has got.

Mr. Goldensky: When the president is elected he, in serving a year as an officer, encounters various propositions and problems to solve. The Convention does not govern by rule or logic but by specific conditions and environments. Mr. Harris is running this Convention this year with this board. He has, against his wishes, to carry the Board with him. You instruct him to go and meet at a certain town. That town has new issues, new specific conditions, and he adapts himself, he studies the conditions and environments, to make the very best success out of the difficulties that he encounters. Now how can Mr. Harris be again useful as a past president when the new conditions will arise? A new board, new mind will be developed in the ensuing year. What benefit is he to render to new conditions which are absolutely foreign to him? He does not go any more around the country, or State, or study the natural or local conditions. How can he render his assistance? It is lost as soon as he stops as a president. He is useless as far as the advisory board goes, the executive or advisory board. We do not do things as we want to do them, but we do things according to our conditions, and therefore how can the past president be of any use if you carry one convention East and one West. With the financial conditions entirely different, with the question of running expenses entirely different, he does not know anything about it. For a man to be president is sufficient honor, and there are sufficient men whose suggestions could be honored. Today you are presenting 30 or 40 presidents. You are discussing the very identical thing that one individual man would do. The next president has newer ideas, and he will very likely establish something else more vital, and he (the ex-president) will retard the progress, because he might have some ideas which he did not carry out, and he will think that issue is still timely and will force it upon the board because he feels interested in it.

Mr. Guttenstein: I would like information in regard to the duties of the two vice-presidents.

President: The duty of the first vice-president is to hang from three and one-half to six million pictures when you have only space for three to four hundred. That is one of the duties. But, to be serious, there are no specific duties for either of the vice-presidents.

Mr Guttenstein: Then I would like to know what they do during the year, from the time they are elected until the Convention takes place?

President: For one thing they make arrangements. By custom the second vice-president has the financial charge of the *Annual*. In the interim, the first vice-president has to get the promises for the pictures for exhibition, have printed and send stickers for the same, send out credentials to your Congressional members, and so many more duties that I have not time to tell you.

Mr. Guttenstein: The reason I ask this is, if it is necessary for the President to travel over the country and

visit different State associations, conventions, etc., to the success of the ensuing convention, I believe it would be good policy if he would divide his time with the other two vice-presidents and have them do part of these duties, which are necessary, if they are necessary to the success of the Association. By doing that, it would not be necessary to have the past president act on that committee.

Mr. Harris: I will answer that question. I should not ask any man on my board to take in any State association when he has to pay his own expenses and I have paid my own expenses where the State association has not done so.

Mr. Guttenstein: They ought to be willing to serve if you asked them.

Mr. Harris: I could not ask any member of my board to go to any State without telling him I would guarantee his expenses.

Mr. Guttenstein: I think the work ought to be divided up among the other officers, if it is too much work.

President: Please be brief; this particular session is going to close in thirty minutes.

Mr. Holsinger: I move you, sir, that it is to be referred to a committee of three to report back at tomorrow's session; by that time we will have all made up our minds how we want to vote on this, and do as we see fit at that time.

Mr. Medlar: I second that motion.

President: The motion is out of order; there is a motion that we adopt this written resolution.

Mr. Holsinger: A motion to refer is always in order. I rise to a point of order, or a motion to lay on the table. I wish to refer it to a committee to report tomorrow.

A Member: It seems to me that we are only delaying matters.

Mr. Holsinger: A motion to refer is not vital; it is simply put before the house, and is voted down or passed. If it is voted down, then the question comes up again.

President: On the statement of Mr. Holsinger I will take a vote to refer it to a committee of three to be appointed by myself. Rising vote called for, and President declared the motion lost.

President: The motion is lost. The question on the original resolution is called for. Rising vote called for, and the President declared the motion lost.

President: Is there any other resolution to be brought bearing upon this subject?

Mr. Harris: I move you, Mr. President, that we accept the proposition as I suggested it.

President: The Secretary will read the proposition.

Secretary (reading): "The outgoing President should be allowed his railway and hotel expenses for his attendance at the following convention. First, because of the help that he could render in advancing and finishing plans that have no doubt been started when he was president.

"Second, because of the added dignity and standing it would bring to the ex-president, and, third, because of his usefulness on committees and the help he would be able to render from the floor." Seconded.

Mr. Harris: The reason why I voted against the other is because I don't believe he should have any representation on the next board, but I do think that he should be at the next convention. With me, I don't care whether you pay my expenses to the next convention, but I know men that are and have been presidents of this Convention that could not come to the next convention without his expenses were paid, and they have been paid, and I think it was out of order for that president to pay the president of

the preceding year without something like this, and to stop the next president from making a mistake like this, I put it in shape, and am I in favor of spending that much money for him at the next convention. It is an honor that we owe him. I am in favor of it.

Secretary Tyree: Mr. Harris is rather conflicting in his remarks. We have turned down making the outgoing president as an advisory member of the executive board for the ensuing year, and we go right back now to his proposition; from what I can understand, the members don't think it a good idea to ask his advice about these things, and yet we turn around in allowing this outgoing president his railway and hotel fares and expenses to attend the Convention. "First, because of the help that he could render in advancing and finishing plans that have no doubt been started when he was president. Second, because of the added dignity and standing it would bring to the ex-president, and, third, because of his usefulness on committees and the help he would be able to render from the floor." That is all I wanted, I don't understand it.

Mr. Harris: My explanation is, I don't think that you can represent the board at the first meeting like you can at the meeting here. For instance, I know the plans here, what we are trying to forward and advance in the Association through this Congress. I will know next year all the plans that we start this year. I don't know who you are going to make the first vice-president, and he will have charge of this Congress. I am talking about any president, now, that happens to come along. If he knows what has been carried on there and we happen to have a first vice-president that runs this Congress not in the lines that it should be run, the past president is there to help straighten it out.

Mr. Goldensky: I disagree with you as to the usefulness of the President. In your case, perhaps, you will be a help in it, but there will be sometime when we will have officers that we will not be so well off. We have had them in the past. Sometimes a man is elected before he knows it. We have had cases in organizations, where men sprung up from the floor, men of the hour, and carried you to disaster. Do you want them to advise you over again? Sufficiently to pay him and give him the honor of paying his railway expenses and hotel accomodations? Allow the one who is elected to work his own salvation.

Mr. Harris: I did not use the word advisory.

Mr. Medlar: I don't understand this thoroughly, what your idea is. If employing your past president to act in an advisory capacity, or in an honorary position.

President: Advisory is not mentioned. You are on the old resolution that has been defeated.

Mr. Harris: Let us have a rising vote.

Mr. Holloway: I think that the former remarks that we have heard relating to the other practically covers this in its entirety, and I don't believe that, as I said before, I believe it is a bad precedent to establish. I don't believe it would be wise to do that, because there may come a time when it would not be advisable for the executive board to pay the expenses or the Association to pay the expenses of the retiring president to the following convention and, as I said before, I believe the retiring president has had all the honors and I believe that Mr. Harris was mistaken when he said that the president's expenses were paid. Now I am going to take you into my confidence. I believe Mr. Hearn's expenses were paid last year when he presented the Academy report.

Mr. Harris: No, it was not, I beg your pardon. I am talking about the year before that.

Mr. Holloway: There was some duty that he performed that we paid him for, consequently I believe it is foolish to carry this thing through, and I believe we ought to kill it, like we did the other.

Mr. Goldensky: You cannot get it. Motion lost.

Mr. Goldensky: I move that we shall honor the outgoing president in inviting him as our guest to the following convention. That is an honor. The man worked hard. Some say it is sufficient honor for a man to be president, but if a man works a year he never feels the pleasure of being among us. They are simply performing their duties; every officer, especially the head man, the president, and it is labor, labor, labor. And why shouldn't we acknowledge the man and invite him as our guest at the next convention?

President: The motion before the house is that the resolution be sent to the P. A. of A. adopting a law that the outgoing president shall be invited to be the guest of the P. A. of A. at their ensuing convention; is there a second?

Miss Reineke: Aren't we getting the same motion over?

Mr. Snow: I move an amendment that he "may be" invited. If they want him, they can advise him, they can invite him.

President: I declare the motion lost for want of a second.

Mr. Guttenstein: As I understand it, it has been customary for the board to pay the expenses of some of the members if they see fit. What is the use of putting this thing into a resolution. If they want to pay them they will do it, and they will invite the president if it is sanctioned.

President: We will hear the next paragraph.

Secretary: "The incoming president should be allowed $100 to pay for a stenographer and typewriter during his term of office. He would have then no excuse for neglecting the correspondence of the Association."

Mr. Ackerman: I move the adoption of this. Seconded.

Mr. Holloway: If you will excuse me for getting up, but that is absolutely unnecessary, because the executive board are always entitled to their expenses, and in that way, if his expenses are over $100 you are curtailing it. That is unnecessary, because the present president, if he needs a stenographer, will go out and get him, and have him stay out there until his work is done. Supposing that should run $110 or $120, he will have to go down in his pocket for that. I think it should stand as it is. The board always paid the expenses of the president at that time.

Mr. Harris: In answer to Mr. Holloway. He is always comparing the board as it was when he was there. It is different now. When he was in we had only a certain kind of work to do, and we did it. Now we have work to do that they had not then. I have four typewriting machines, and most of the time they worked on my stuff, and they are objecting to it, and I paid it myself. And so if you people will allow $100 simply for a stenographer, that amount will get that work out, because he won't have to do as much work as I have done this year, and I think it is a mighty good thing to allow $100 for expenses.

Mr. Goldensky: I think it is logical. He will never send you a bill for services rendered. What is the bill for, he never paid anything because he used an employe in the establishment. In this way he can get a more able assistant to carry on the correspondence, and to the better advantage of

the society. It puts him in an uncomfortable position for his spending more money than is used.

Mr. Lewis: Do I understand that the expenses of the president, prior to the convention, are confined to $100 then?

President: I hope not. This is a particular amount for a particular service.

Mr. Harris: I will answer that. No, in the expenses the president is not allowed a cent for any extras or anything else; he has to put in a report for every cent he spends, and make a voucher for it. I know some of the presidents in the past have put in things that they have not spent. I am trying to figure it that a man will have this $100, and then he cannot come here and say, as has been said in the past; in answer to the query: "Why didn't you answer my letter?"

"Because I didn't have a stenographer."

I say he should have $100 for a stenographer; if he does not spend it that way, it is up to him. I have spent about $40 that exactly is nothing but for typewriting. That goes into this Association, that they will pay; but there had been more than $40 on typewriting that that girl did not do.

Mr. Snow: It seems to me that if Mr. Harris has spent money that the board would not allow, if he would bring his bill into the Association I think we will allow it. He says that presidents have brought in bills that should not have been. Well, what is there to keep a president from paying a stenographer $100 and using his own help in the gallery and paying it on his own time. There is nothing to keep him from it, if he wants to. If he is going to be dishonest he will be so.

Mr. Harris: Let's make it legal, so that he can do that. Rising vote taken, and declared carried.

Mr. Harris: I make a suggestion that you read every one of the paragraphs, because it is all the same plan, and you can see where you will save money in the end, if you will read the whole thing.

Secretary (reading): "The first vice-president should be allowed the same amount for a like purpose.

"The second vice-president has been designated of late years as the gatherer of advertising for the *Annual*. I think that 5 per cent. of the amount that he collects from this source for the *Annual* should go to him as a just reward for the hard work he does. The advantages of such an arrangement are too obvious to require discussion among business men.

"The secretary should receive 5 per cent. of the total for all floor, wall, and desk spaces that he sells, or on any other earnings that he makes for the Association, exclusive of membership and *Annual*.

"The treasurer should continue to receive the same as he is allowed at this time.

"The foregoing plans would result in a great deal more good to the Association as far as the service is concerned than anything else. As it is now, the secretary is very much overpaid compared with what his fellow officers receive.

Mr. Harris: I move that we adopt this whole scheme at once. Seconded.

Mr. Harris: The reason why I made this this way was this: I have been secretary, first vice-president, and president, and the biggest job of the whole lot is first vice-president. He has got this Congress in his hands, and all these State officers, and it is no joke to write the State officers and get them to answer you. He writes several of them, and once in a while gets an answer. It is a hard job. I think that the first vice-president should be allowed

this money that I have stated, $100. I also think the second vice-president—and I understand they will continue this proposition on gathering the *Annual* work. Take Charlie Townsend, who has worked like a dog this year to get all these advertisements, and who gets the benefit—the secretary. He gets 5 per cent. of Charlie's work. Now give the second vice-president 5 per cent. of the amount of money that he earns and take it from the secretary. Give the secretary 5 per cent. of the work he does, done on the floor. The treasurer, who gets in the membership, should not divide 5 per cent. with the secretary. Consequently if you take 5 per cent. off our secretary and add that 5 per cent. to these officers, it will soon amount to about $100 more than it is, and I think it is a lot better distributed than it is now.

Mr. Lewis: I have been through these offices of first vice-president, and I heartily endorse this movement. I can tell you that the office of first vice-president is an extremely hard job. That of second vice-president where all the advertisements are dumped into your hands. It is expensive and hard work, and comes in a time of the year when you can ill afford to spend the time. I can appreciate this because I know what it means.

Mr. Holloway: I want to square myself with you now. This is one thing Mr. Harris says that I *can* agree with. I believe in that. I like that part of it. I don't believe that second vice-president should gather in three or four thousand dollars' worth of business and pay that commission to the secretary. If you make a change, that would even it up.

Secretary Tyree: There is one suggestion I want to put before you before this is put to a vote. In any organization the hardest officer that you have to elect is always the secretary. Now I don't believe in a secretary receiving 5 per cent. of the business collected by the second vice-president, but wouldn't it be wise, in view of the fact that this is a hard office to fill, always, and I believe you will agree with me, those of you who have had experience in the past, if you take the weight off the second vice-president and give the duties where it belongs, and let him gather the *Annual* advertisements and the floor space still, so that you will not reduce his expenses so much, because that will take $250 or $300 off the salary. The commission with his earnings will be about $200. I think the way it is conducted at the present time the secretary is overpaid, and the second vice-president is not paid at all for his services, and it is a hard job, and so is the first vice-president's.

Mr. Harris: A good suggestion would be, instead of mentioning the second vice-president, to let the board decide, as they do now, who gathers the advertising for the *Annual*, and let that 5 per cent. go to the man who gathers that advertising, no matter which office it would be. You would have to rewrite that and change it, because Mr. Lewis has charge of this other job; I think this would be good for him to do.

Secretary Tyree: My idea was to try and not give you any more trouble in selecting your secretary, because I feel that the second vice-president's job really belongs to the secretary, and you have thrown something on his shoulder that belongs to the office of secretary, and you better put it that way, so that the secretary will feel that he will get some compensation, because if it is thrown on the second vice-president it means that his commission will be less than $200 on the average. That second vice-president's duty applies to the secretary.

Mr. Ackerman: I move that the

subject be referred to a committee of three to be appointed by the chairman, to be taken up tomorrow morning.

President: The motion to refer is lost for want of a second. (The motion was put "with the change that the board decided—that the revenue derived from the collection of advertising be paid to the man who collects it." Motion carried.

Upon motion by Mr. Harris, the meeting adjourned to the next morning in same hall.

SECOND SESSION, JULY 26

President Larrimer: This Congress will please come to order. We have no absolute record of the delegates here, and immediately at the close of this meeting, before the opening of the Convention, or some time during the meeting, I wish that each State or society that is represented here would delegate somebody to write the names of their delegates and alternates on a piece of paper and bring it up to this desk, in order to compare with the stenographer's notes and the Secretary's record. I think that we perhaps yesterday overlooked the fact that all past presidents of this Association are members of the Congress I don't believe we had them here, and before another meeting of this Congress I am going to try to make an endeavor to have all the past presidents that are visiting the Convention today attend these meetings of the Congress. We are now ready for further business. Mr. Secretary, what was the last subject in question?

Secretary: It was the president, and the first and second vice, and secreraty's percentage. We get to the treasurer right now.

Mr. Snow: I make the following motion: The time for debating will be limited to three minutes to each party, and then it will not be drawn out so long, and they shall not speak but once on a question, without unanimous consent. The maker of the motion will have the right to close the argument. Motion seconded and carried.

Secretary: The next to be taken up is: "The Treasurer should continue to receive the same as he is allowed at this time.

"The foregoing plan would result in a great deal more good to the Association, as far as the service is concerned, than anything else. As it is now, the secretary is very much overpaid compared with what his fellow officers receive."

Mr. Snow: There is a recommendation there that the Treasurer buy an addressing machine.

President: That is later: We will take this section by consent unanimous.

Secretary (reading): "The Treasurer is obliged, five or six times a year, to address envelopes to the members of our organization. I recommend for his use the purchase of an addressing machine as a time, labor, and money saver."

Mr. Snow: What is the cost of this machine?

Secretary: About $200.

Member: I would like to ask information in regard to the cost of the addresses set up?

Mr. Harris: Anywhere from fifteen cents apiece, according to how they buy them. He would only get the addresses of the men that he knows would be continued members. There are about a thousand people that he writes to every year—that is, between 900 and 1000.

Mr. Snow: I move the recommendation of this paragraph that the treasurer be allowed to purchase an addressing machine.

Secretary: I want to state to the members that we cannot remember all the names, and when you get up to make a motion, please give your name, so that the stenographer can get it.

Mr. Reuvers: I suppose that means that the addressing machine is the property of the Association?

President: It certainly does. Motion carried.

President: That paragraph is adopted.

Secretary (reading): "The Congress of Photography is a success, as you all know, but it could be made a much bigger success by being brought out along improved lines.

"I have attended many of the State conventions held this spring, and I am satisfied that if we could devise a plan that would do away with the per capita tax and make out State associations representative to the Congress upon the basis that we are to have two representatives from each State society, then we would have no trouble in getting every State in the United States and Canada interested.

"The adoption of this plan would be to make the Congress like the Senate of the United States. No matter how large a State organization might be, two men would represent that State organization.

"In working out such a plan along these lines, all states would be sufficiently interested provided we made the Congress work along a given line, and make that line of work something of importance."

"To carry out this idea, I have divided the Association and the Congress into two parts, making the Congress a place to decide where this Association should meet next year, and also that they select and elect the officers and transact all other business of the Association.

"Allotting such duties exclusively to the Congress, that would be left for the Association, the educational features, such as the school of photography, demonstrations, lectures on art subjects, etc., and all entertainments of various kinds."

President: This is certainly a very important and far-reaching question. I do not believe that it was the intention of the writer, nor I don't believe it would be your wish to take any snap judgment on this question. I believe that we should devote the balance of the session, unless something of immediate importance comes up, to a very careful discussion of this question. I really do not consider that you will find it necessary to take any definite action on this question at this particular meeting. The subject is now before you.

Mr. Harden: I make a motion that the first part of it, in regard to the two delegates from each State association be recommended to the Association for favorable action. We wish to consider this proposition separately.

Mr. Holsinger: If I understand correctly, that means two delegates from each State, or from each local Association. Suppose you have a tri-state association. Will that State send you three delegates or two.

Secretary: Two.

Mr. Harris: I did not intend in making that suggestion that we discuss this so much in this Congress, but what I figured on doing was to bring this whole program with me here and read it to the end, and then refer it to the State societies, and ask that they either recommend or do not recommend this. If they recommend it, we would send it to the National. Another way to do it would be not to take it to the Convention at all but recommend that our next first vice-president take it up with every State organization, sending a copy of it to every State organization, whether they

are members of this Congress or not, and let each State society bring it back with their own ideas. For instance, if we get your tri-state society's opinion on this thing, you will suggest something that will be far better than the thing that I have given you. I don't think the scheme that we are working on now is a good one. This per capita tax I don't believe is a good thing. It is going to be a hard matter to get these States to keep sending per capita, unless you give them something to show for it that is better than we show now. If you take this whole proposition from here down back to your States and bring it back again next year you will suggest a lot of things that we don't know anything about now. For instance, that tri-state proposition. The only other explanation is that so many folks think we ought to go by the number of people we have in each territory. We cannot do that, because if New York should come in, it and Ohio and Pennsylvania would have a controlling vote, but if we have two from every State organization, no matter how small, it would be a representation from a big territory. For instance, there is our friend from Missouri there, who was complaining about a certain thing this morning. If every State had but two votes, you would have just as much chance to change anything that you wanted with every other State society, where if you only had a small State society and three or four big ones would get together on the other scheme that would outbid you, whatever you had, I would like to see this Congress be the deciding vote on everything, and consequently I would like to hear the concensus of opinion, and not any one section. I would suggest that we simply have this O. K.'d by this Congress, to the extent that we refer it to the State societies for their opinion.

Mr. Holsinger: I agree with Mr. Harris, and I think it could be amended in his way, that each association send a representative for so many members, but one State not being allowed to send more than two representatives. In that way the smaller associations would not need to send those representatives if they did not care to. Some of the associations are paying the expenses of their delegates, but it falls heavy on them to pay their expenses of those delegates, and I would move, sir, that you appoint a committee to formulate this amendment to the law and let them report back. I don't believe that we will derive any benefit from an open discussion here on the floor. I believe a committee can handle that and make an intelligent report to be handled later on. There is one objection I see to this. I saw on the program there were only two sessions of the Congress of Photography. Some of these delegates have travelled several thousand miles to come here to these two sessions, but I find since that we will have more, if it is necessary, which I am very glad to know.

President: May I answer that? It is my understanding that we can, if we wish, have morning sessions here from 9 to 10.30, every morning; there is nothing to interfere; together with such other sessions as we may think necessary. There is no limit to them, as I understand it, until we clean up all the business that we have to do, and I assure you I will be glad to meet you here any time you wish.

President: Is there a second to the motion.

Mr. Harris: I would like to speak a word, if you will allow me. I don't think anyone here has had as much experience with this Congress as I have. If you refer anything like this to a committee it is only a matter of bringing out a campaign from one end

of the country to another, and they never do anything, and it is impossible to bring these men together.

President; He means to report during this session of the Congress.

Mr. Reuvers: I move that this matter be put in concise form and be sent to the different State associations, and be returned to the Secretary before the next Convention.

Mr. Holloway: I would like to ask for a little information. If that has reference to a certain portion of that paragraph where he suggests that the Congress of Photography elect the officers of the Association. Is that included in that, that this committee is to report upon that also, or are we going to take that up as a separate paragraph?

Mr. Harris: I would say that that is a different proposition altogether.

Secretary: I simply read all those paragraphs in order for you to get them together.

Mr. Holloway: Is that supposed to be taken up now or later?

President: The opinion of the chair is that that particular part of this before the house relates to representation by two delegates from each association, and if possible the devising of some means of eliminating the per capita tax.

Mr. Harris: As seconder of that motion, I figured that the best way to clean the whole matter up is to refer to the whole State associations, and let's hear from George Holloway next year by a form that will be in shape that we can understand it. Why not refer the whole thing, from one end to the other, from where we are starting now, to the State societies, and let them refer it back to us next year. That is what I meant and I think that is what the seconder of the motion meant.

President: Will you please state, Mr. Reuvers, the scope of your motion?

Mr. Reuvers: I would be willing to change my motion to have a unanimity or concensus of opinion. I was thinking of the whole business, and then the associations can thresh it out and send a letter or any representation to the national body.

President: The motion is this; that the matter be put in condensed form by the Secretary and submitted to the State organizations, recommending the report of their action again before the next meeting of the P. A. of A.

Mr. Guttenstein: I think that a great many of the State associations will hold their convention for this year, and won't meet again, and this matter being referred to them would probably have to be left to the officers.

Mr. Harris: I will answer that by saying that the Secretary would start immediately with the Ohio-Michigan, and would succeed in meeting every society that is in this country, because the ones that have already met will meet again before our next meeting.

Mr. Snow: Why not have this boiled down just the way we want it and send it to these associations that way with our recommendation that that is what we want?

President: That is the intent of the motion as I understand it.

Mr. Snow: If they get hold of the whole business, they will get mixed up.

President: I believe the motion covers your recommendation.

Mr. Vandeventer: That recommendation of the different State societies only has reference to that section, does it, in regard to the State association affiliation with the National? If you are not going to recommend all these recommendations, you are not going to submit them, are you, to the State associations? There are things in there that are only pertinent to the National.

President: Are you referring to what

we have done yesterday, or to the subject before the house now?

Mr. Vandeventer: The thing before the house now.

President: My understanding is that it does embrace all these suggestions directly having to do with the formation of the Congress.

Mr. Holloway: It seems to me that if that motion passes we may as well adjourn, there is nothing more for the Congress to do.

President: There are a lot of other things besides this.

Mr. Holloway: Let us hear read what we are going to vote upon.

Secretary (reading): "The Congress of Photography is a success, as you all know. But it could be made a much bigger success by being brought out along improved lines.

"I have attended many of the State conventions held this spring, and am satisfied that if you could devise a plan that would do away with the per capita tax, and make our State associations representative to the Congress upon the basis that we are to have two representatives from each State society, then we would have no trouble in getting every State in the United States and Canada interested.

"The adoption of this plan would be to make the Congress like the Senate of the United States. No matter how large a State organization might be two men would represent that State organization.

"In working out such a plan along these lines, all States would be sufficiently interested, provided we made the Congress work along a given line, and make that line of work something of importance.

"To carry out this idea, I have divided the Association and the Congress into two parts, making the Congress Convention a place to decide where this Association should meet next year, and also that they select and elect the officers and transact all other business of the Association.

"Allotting such duties exclusively to the Congress there would be left for the Association the educational features such as the School of Photography, Demonstrations, Lectures on Art Subjects, etc., and all entertainments of various kinds."

Mr. Holloway: Let us get the opinion as to what part of that they favor and what part they do not favor. If this goes before the State associations the chances are it will be snap-shot judgment taken on and come back recommended to accept them, and we have not even suggested to the State associations what part of that the Congress of Photography favors. It seems to me that we ought to state what the Congress favors, and then ask the State associations to ratify it. If we do not, it is next year the same things over again. Some things I like immensely, and some things I detest. I don't like the idea of taking away from the members of this Association the right of franchise. I think that what brings more men and more women members of this Association here is the right of franchise—more so than anything else, outside of seeing the pictures is the fact that they have a voice in who is to be our next officers. If the election of officers is to be decided by, say, 32 delegates—we will say 32, 16 States would be represented, with two members from each State. Thirty-two delegates could be gotten at a whole lot easier than 1600 people. I think the Congress ought to put their vote down on that part of it, so that it will not be taken snap shot judgment on it by the State associations. Now, then, I think the officers of this Association should be elected by the individual members of the Association. Now we ought to go before a State

association emphatically on that point; that is, we could come to the conclusion among ourselves which we favor, whether the delegates electing the officers or the entire mass of members. Let us have our opinion about that point before we ask the State associations to ratify it. If we are wrong on that, the State associations might possibly set us right. This is the place where these things ought to be gotten at in a systematic form, so that we won't be groping in the dark.

Mr. Reuvers: I believe I agree with Mr. Holloway. The motion is simply to refer this to the State associations and there it will be threshed out. Either the State associations will instruct their delegates that this Congress will still have something to say when it comes together next year.

Mr. Guttenstein: I don't believe the State associations will know anything about what is going to come before the Convention, and that would naturally come up before the Congress, but I believe, as Mr. Holloway does, and I take this as my point of view: Supposing there are 32 delegates, as has been suggested, and a portion of these delegates favor a certain person for an office, and the other portion favors a certain location for the Convention, they can easily trade their votes, and control the matter in that way. It would be entirely wrong, and it could easier be done with 32 than with the entire body.

Mr. Egan: I was just going to get up and say the same thing Mr. Holloway said, for this reason, and he touched on a very vital point, too, in reference to politics. It seems to me that if there is anything that brings the membership up to the National association it is the taking part in the election of officers, and selecting the place for our next meeting. I believe it brings more members and more visitors to our Association than anything else we have got in our Association.

Mr. Snow: I move you that the chair appoint a committee of five.

(To be continued in our next.)

## NEW BOOKS

*The British Museum, Its History and Treasures.* A View of the Origin of that Great Institution, Sketches of its Early Benefactors and Principal Officers, and a Survey of the Priceless Objects Preserved within its Walls. By HENRY C. SHELLEY, author of *Inns and Taverns of Old London.* Illustrated; 348 pages and index. Boston: L. C. PAGE & Co., 1911. Price, $400.

It is not to be expected that so stupendous a treasure house as the British Museum is to be described in any sort of detail in a single volume. "Seeing that the official guidebooks already exceed thirty in number, and that these are but prefatory to a library of exhaustive treatises and catalogues, the mere titles of which extend to twenty-four pages larger than this, it will be obvious that the eight chapters describing the various departments cannot make any pretence to completeness in detail. That is to say, the readers must not expect to find specific mention of every object in the different departments. Instead of attempting the impossible, the method adopted has been to give the reader a point of view, useful alike, it is hoped, either for a visit to the Museum or for an armchair understanding of its contents."

It is the armchair understanding that, unfortunately, the majority of us will have to be contented with. Thanks, however, to Mr. Shelley we are enabled to get a fairly comprehensive outline of the different phases of knowledge represented by each of the departments.

After describing the origin, the early benefactors, and notable officials, the author recounts the treasures of the Museum under eight headings: The Printed Books; Among the Manuscripts; Relics of Greece and Rome; Egyptian Antiquities; Babylonian and Assyrian Antiquities; Prehistoric Man; Civilization in the Making; and The Arts of Man. From these chapters we get a surprisingly clear idea of the scope and purpose of the different collections. With such a vast array of the world's most interesting relics to write about, the book could not be otherwise than vastly interesting, and Mr. Shelley does not fail to heighten the interest. The book is illustrated with some sixty reproductions of photographs of celebrated treasures, such as portions of Magna Charta, Nelson's last letter, the Elgin marbles, the Portland vase, charter of Nebuchadnezzar, etc.

It was President Garo, we believe, who said that the photographer, having perfected the mechanical side of his profession, would do well to increase his store of general knowledge. A general acquaintance with the contents of the British Museum is a liberal education in itself, and we heartly recommend Mr. Shelley's book as an introduction to such an acquaintance.

*The Art of the Vienna Galleries.* Giving a Brief History of the Public and Private Galleries of Vienna, with a Critical Description of the Paintings Therein. By DAVID C. PREYER, A.M. Illustrated with 48 full-page plates in duogravure. Decorative cover, 317 pages, bibliograph, and index. Boston: L. C. PAGE & CO., 1911. Price, $2.00, *net.*

This is a valuable addition to the series of descriptions of famous European picture galleries, such as the Louvre, the National Gallery, the Prado, the Vatican, the Munich, and others; a series which, by the way, should be found in every photographer's library. It has been said that Vienna surpasses all cities of Germany in the importance of its art collections, and may in Europe be compared only with those of London, Rome, Paris, and St. Petersburg.

With a total of some 5500 pictures in the various galleries, the author has ample material to draw upon, and his choice of illustration is particularly fortunate from the photographer's point of view. Of the 48 splendid full-page duogravures, twenty-eight are portraits, and by such artists as Raphael, Titian, Velasquez, Rubens, Van Dyck, Rembrandt, Holbein, Murillo, Cuyp, Terborch, and Gerard Dow. It will be seen that, even if the book cannot be used for an actual guide to the galleries themselves, it cannot help but be of great interest to every portraitist. The author writes interestingly of the pictures, and with much information concerning the painters, and many useful comparisons are made.

*Complete Exposure Method and Home Portrait Helps.* By F. M. STEADMAN. Pp. 49; illustrated. New York: A. C. and W. E. WILMERDING, 1911. Price, 75 cents.

Mr. Steadman is a well-known exponent of home portraiture and an au-

thority on exposure methods, and in this little book he explains his method and tells the readers how to make various styles of home portraits with a No. 3 Brownie. There are chapters, or rather paragraphs, on Strength of Light under Various Conditions, Important Rule for Lighting, Exposure with Artificial Light, Natural Studios and Backgrounds, Photographing Sunsets. The illustrations are not particularly happy and fail to do justice to the possibilities of "at home portraiture."

FROM the New York Edison Company we have received a copy of the very beautiful souvenir book, copies of which were presented to the members of the National Electric Light Association who were recently gathered in New York for a convention. Appropriately the book is in the nature of a handbook to the city of New York. It is one of the most perfect pieces of bookmaking we have seen in some time. Its illustrations are reproductions of etchings from a masterhand, of the city landmarks and some of its unusual nooks and corners; its reading matter, descriptions of the places worth seeing, are pen pictures from the pen of a man who knows and loves his New York exceedingly well. Certainly a unique and delightful souvenir, reflecting great credit on the Edison Company and its publicity department.

## EXPOSURE TIPS

*Exposure.* With Seed plates the latitude of exposure is usually about two. That is to say, if one second were the normal exposure, plate would stand a two-second or a half-second exposure without being too much over or under exposed.

Light varies in intensity from hour to hour during the day and from month to month during the year. In winter, exposure during the middle of the day should be from two to four times longer than at the same hour of the day in midsummer. Exposures made near sunset at any season of the year would require from five to ten times longer than at noon of the same day.

*Correct exposure* gives a well-balanced image in which the detail of the shadows is fully brought out before the highlights are overdeveloped.

*Transparent mottling* is due to negative having partially stuck to the glass side of another plate during washing and when pulling apart caused the emulsion to partially lift.

*Over exposure* produces lack of contrast. If development is carried too far, negatives will have too much density and shadows and half tones will be clogged. Such negatives will be slow printers and the resulting prints would lack brilliancy.

*Halation* occurs when strong lights are brought opposite dense shadows. It is frequently seen in the case of white draperies on a dark background. It also occurs in view negatives when dark objects are photographed against a bright sky. When photographing dark interiors, halation shows as a spreading of the light from the window. Various remedies have been suggested for halation, but the best preventative is the use of a double coated or non-halation plate.

*Mottled yellow stain is caused by* negative or paper being slightly damp when printing proofs. Discoloration is a silver stain from the paper. Be sure that negative and paper are both perfectly dry when proofing.

# TRADE NOTES

After two years of careful experiment, Burke & James, of Chicago, have put on the market a line of compressed tablets for various photographic purposes. The developing tablets include such popular developers as Metol-Quinol, Edinol-Quinol, Pyro, Eike-Hydro, Hydrochinon, Pyro-Meto, and Glycin-Quinol. Then there are the Ingento Intensive and Ingento Reducing tablets; Potassium Bromide 1 grain tablets, and Ingento Cyanide tablets. All the chemicals are guaranteed as to purity and accuracy. They are the acme of convenience and compactness, and are beautifully packed in vials and tubes. The various chemicals being converted from loose and easily spilled powder into compact and accurately measured pellets or tablets, waste is reduced to zero. We have sampled the M-Q developer and the Intensifying and Reducing tablets with thoroughly satisfactory results. They dissolve rapidly without the aid of hammer or pestle, and with the measured quantity of water produce an absolutely fresh and active solution at a great saving of time and trouble. Another advantage is the small amount of shelf space needed for storage, making them handy in the dark room and even more convenient when travelling. With so many advantages we feel sure that Ingento tablets will have a wide popularity.

---

Color photographs on paper, so much sought after and so often promised, are again offered to the photographic world. At the present writing we have no further information than is contained in the Utocolor Company's announcement, printed in our advertising section. Autochrome and other color-screen photographs, such as the Dufay Dioptichrome plate, can be printed direct in their full colors on Utocolor paper as easily as making ordinary print-out paper prints. In our next issue we hope to have further details of this interesting development; meanwhile, the fact that Dr. J. H. Smith's process is used leads us to expect the fulfilment of the hope, long deferred, of direct color photography on paper.

---

It is well known that better work will bring better profits. To produce better work you must be sure that you have the best tools procurable for the particular work you undertake. In portraiture, for instance, the Bausch & Lomb Zeiss Portrait Unar should receive your careful consideration. Booklet AA, describing this lens, will be of particular interest to you whether in the market for a lens or not. The Bausch & Lomb Co., Rochester, N. Y., will be glad to send you a copy.

A. E. Maris, for twelve years manager of the Philadelphia branch of the Defender Photo Supply Company, has severed his connection with the company in order to enter the retail photographic field. Those who have had business dealings with Mr. Maris trust and believe that he will meet with every possible success in the new venture.

He is succeeded in the managership of the Defender Company's Philadelphia office by Samuel J. Sloan, who has been travelling representative in the outlying territory for the last year.

---

*Royal Routing Cutters* is the title of a handsome booklet just received from John Royle & Sons, Paterson, N. J. This is the most complete exposition of the "cutters hat cut" ever put into print. It is not only a book of reference for styles and prices, but also a helpfully suggestive manual for the cutter user. Every photo-engraver and every user of a routing machine is invited to send in his name and have a copy mailed him. John Royle & Sons are known the world over as producers of the finest line of photo-engraver's tools manufactured.

---

The Eastman Kodak Co., already possessing the highest smokestack in Rochester or anywhere else, are now planning to make their new office building on State Street, Rochester, the tallest as well as handsomest building in the city. It will be sixteen stories high and surmounted by an ornamental tower. To insure a good architectural design, a prize of $1250 will be offered for the best. From our English contemporaries we see that the English Kodak Co. is about to open a very fine building for their headquarters on Kingsway, one of London's finest thoroughfares.

---

How many photographers are getting all the business out of a good negative that there is in it? With little or no urging at all an enlargement, one with all the quality of a contact print, could often be disposed of, and Artura Carbon Black can be made to yield the finest kind of enlargements with little trouble and much certainty.

---

The practical uses of the Towles-Schofield Smokeless Flashlamp was amply demonstrated at the recent Bridgeport Convention. Photographers who saw it in action were quick to see the many advantages of this clever piece of apparatus. It is worth investigating right now, before the short dark days and the busy Christmas rush are here.

# WILSON'S PHOTOGRAPHIC MAGAZINE

A MONTHLY MAGAZINE FOR PRACTICAL PHOTOGRAPHERS

Founded in 1864 by EDWARD L. WILSON
MRS. EDWARD L. WILSON, Publisher and Proprietor
L. WINIFRED WILSON AND T. DIXON TENNANT, Editors

EDWARD L. WILSON, 122 EAST TWENTY-FIFTH STREET, NEW YORK
*Entered at New York Post-office as Second-class Matter*

Yearly subscription in advance, United States and Mexico, $3.00; Canada, $3.25; Foreign Countries, $3.50
Single copies, 25 cents. Subscriptions begin with current issue unless otherwise ordered. Original manuscripts on photographic subjects are solicited, and, if accepted, will be paid for on publication.

## EDITORS' TABLE.

WE extend our hearty congratulations to Miss Sampson and Frank Roy Fraprie, who were married at Brookline, Mass., on September 16. Having worked together on the staff of *American Photography* for some years, a lifelong partnership is the happy consummation.

WE are reproducing elsewhere in this issue a portrait made by Rudolph Dührkoop at the St. Paul Convention. The same portrait was reproduced in our last issue in connection with an advertisement of the Defender Photo Supply Co. We were unable, however, to get the best results from the halftone, and in justice to Mr. Dührkoop and the Vulcan plate on which the negative was made, and Triple A paper, on which the print was made, we are glad to reprint the halftone on plate paper in an endeavor to secure a more faithful rendering of the original. This original is before us, and is an eloquent testimonial to the qualities to be found in the Vulcan plate and Triple A paper.

GENERAL regret will be felt by photographers throughout the country for the tragic disaster that brought death to W. P. Buchanan, of Philadelphia, the well-known manufacturer of "Luxo" flashlight powder. On September 13, while mixing chemicals in his laboratory, an explosion occurred, and Mr. Buchanan was hurled a distance of twenty feet and so badly burned that he died on the 20th, aged fifty-one years.

Mr. Buchanan has been making flash-powder for many years, and was known to take every possible precaution, but like so many of our flash powder manufacturers, he fell a victim to some unexplainable caprice of this treacherous explosive. He was well known and very popular in photographic trade circles, and his death under such painful circumstances is deeply lamented.

WHEN Milton Waide invaded New York, some ten years ago, with his "One-man Method," he seems to have been just ten years ahead of the times. The following appeared in a metropolitan newspaper advertising column recently: "I personally make every sitting, and see every print. The limited number of sittings that can be made necessarily make my photographs cost more than the regular factory-made photographs"—or words to that effect. This is essentially what Waide tried to do, but he failed because his prices were not high enough. It is more successful when you can get thirty dollars a print.

THE German Professional Photographers' Association has just held a very successful exhibition at Dessau. The catalogue issued was fully illustrated with good reproductions of high-grade protraiture.

THE Photographers' Association of the Pacific Northwest closed its convention at Tacoma, Washington, on September 8, with the election of the following officers: President, A. G. Churchley, Portland, Ore.; Vice-President, L. A. Sprague, Bellingham; Secretary-Treasurer J. E. Ralston, Seattle; and the following State Vice-Presidents: Oregon, H. B. Dietz, Hood River; Washington, Miss Ruth E. Brown, Chehalis; Idaho, R. R. Mimes, Sand Point; Montana, Louis Hyne, Great Falls; British Columbia, W. M. Moore, Vancouver.

Portland, Oregon, was selected as the place for the 1912 meeting.

A movement was started during the convention to have laws enacted by the several States requiring the labelling of all photographic work as to its enduring qualities. Final action was deferred until the next convention.

By Ernest Gall, Adelaide, South Australia

# WILSON'S PHOTOGRAPHIC MAGAZINE

FOUNDED IN 1864 BY EDWARD L. WILSON

VOL. XLVIII NOVEMBER, 1911 No. 659

## THE AMERICAN PHOTOGRAPHER AND COPYRIGHT

THE American photographer, as a rule, is keenly appreciative of any movement which promises him an advantage in business. The growth and importance of State and National associations are practical evidences of his earnestness in seeking business success. In his business methods, in his enterprise, and in his professional ability he easily outstrips his European fellow-professional as we have known him in Germany, France, and Great Britain.

But with all his alertness and progressiveness, he has almost completely overlooked a business advantage which, of all others, he should be the first to perceive and grasp: We refer to his strange apathy concerning photographic copyright.

In no other country are pictures and illustrations so popular or so important a feature of everyday life as in America. Illustration is, in fact, universal. The daily and weekly papers, and printed matter of every sort with which we are literally deluged at every turn, depend largely for their interest upon illustrations—portraits of prominent people and scenes, pictures which interest as news records or by their pictorial attractiveness, records of incident and life at home and abroad, indoors and out, of work and sport, of humor and pathos—all these are sought for, gathered in, and published far and wide by every conceivable method of reproduction. The public demands pictures and the public pays for them. But who makes the pictures and who profits by their sale? Here are two plain questions. Let every photographer answer them for himself, and we are sure of his interest hereafter in the question of photographic copyright.

A glance at any illustrated paper will show that the photographer bears the burden of the public demand for illustrations. Ninety-nine per cent. of the pictures published in our newspapers and periodicals are direct reproductions from photographs. In how many instances does the photographer profit by this use of his work? We venture the answer, Not in one instance out of ten. Why should he not profit by this use of his work? If he equips himself for its making, if he produces by his skill something which has salable quality, should he not be

the first to profit by his skill and labor? Does the publisher furnish his paper to the public without money and without price? Why should the publisher profit by selling the photographer's work, and the photographer be content with "glory"? Does the publisher pay the photographer for the use of his productions? Sometimes, when he is compelled to do so; never if he can avoid it. Why? Because the photographer has not yet learned to appreciate the value of his work to the world—its plain matter-of-fact value to those who purvey news or information to the public.

These things are worth thinking over. By availing himself of the protection of copyright, the photographer may secure for his own benefit certain legitimate profits arising from his business which at present he permits to go to waste, or rather, to the enrichment of other business men who can turn his product into hard cash.

It must not be imagined that we impute any blame to the publisher. As a business man it is his chief interest to get and reproduce what the public will buy. If he can get his materials without cost, so much the more profitable will his business be. The mistake lies with the photographer who is so careless of the sources of income or profit rightly belonging to his business.

The remedy lies in a better appreciation of the advantages of copyright and in united action to secure these advantages.

We believe that as soon as the American photographer looks squarely at this question of photographic copyright he will perceive its obvious advantages and insist upon his reasonable rights. Therefore, we urge again, as we have urged before, that photographers should enroll themselves as members of the Photographers' Copyright League of America, and put themselves in touch with the great work this League is doing for their benefit and advantage. All that is necessary to secure this membership is to send a request to be enrolled, with your name and address and one dollar, to the secretary of the League, Mr. Wm. H. Rau, 238 South Camac Street, Philadelphia.

## ADVERTISING AND BUSINESS

THESE remarks are for the manufacturer and dealer. There is much complaint that business is dull and that conditions in the photographic retail business are not as flourishing as they should be. Possibly not; but whose fault is it?

One of the most interesting journals that comes to our exchange desk is *Advertising and Selling*, devoted to advertising and selling, as might be gathered from its title. Some of the things that can be learned from its pages would surprise many of our photographic manufacturers. We read about one of the largest advertising contracts ever placed, something over a million dollars, and all this money was to be spent in advertising what? —an everyday necessity like soap or a safety razor with a wide margin of profit that would permit a generous advertising appropriation? Nothing of the kind. The million dollars were to be spent in fostering a habit, thought by many to be a bad habit, and pro-

mote the sale of chewing gum—plain, ordinary gum, that is hawked on the streets at five cents the package.

We do not like to think that the photographic industry ranks below that of chewing; but here is one gum concern spending more on its advertising than all the photographic material manufacturers combined—and there are a few notable advertisers in the photographic field.

So many manufacturers talk about photography as a luxury, and say that it doesn't pay to advertise. Do you remember a time when there was more money spent on luxuries than right now? A luxury is only a luxury until such time as you make the buyer decide that he must have the luxury, and it has become a necessity.

Ten years ago a kodak was a luxury. Now it is a necessity with every traveller, and the vacationist won't leave home without at least a Brownie. He has been told so often to take a kodak with him that he surrenders to the oft-repeated suggestion. That a luxury can be advertised on a big scale and made profitable on a correspondingly big scale is amply proved by the Kodak Company's declared dividends.

So many things are made in the secrecy of the factory and smuggled into the dark recesses of the dealer's store, there to lie unheralded and unsung until an unusually inquisitive customer comes along and makes a purchase out of sheer surprise.

Think of the millions of unmounted prints waiting for a well-advertised line of albums, and the same number that might be hand-colored if a manufacturer were ambitious enough to show how easily they could be done. Think of the hundreds of thousands of cameras that are shelved as winter approaches, because their owners have not been sufficiently impressed with the many advantages of f/5.6 over f/16. Think how easy it is to make enlargements in a fixed focus enlarger, and then think of the camera owners that never heard of such a thing. Think of the millions of prints that might be made into Christmas greetings if some of our mount manufacturers were to get really ambitious and spend some real money like the chewing gum people.

Think of photography, with more possibilities than any discovery of modern times, spending less to make those possibilities profitable than is spent in booming one brand of plain, ordinary chewing gum.

## ISOCHROMATIC WORK IN THE STUDIO

BY RICHARD PENLAKE

THE average professional photographer, in the opinion of those who are supposed to know, has been very slow indeed to recognize that there are advantages to be gained in the use of isochromatic or color-sensitive plates in the studio. Platemakers and experts have been trying for many years to make isochromatic plates as popular as they rightly deserve to be for professional work, but the studio man appears to have become so firmly attached to the "good old ordinary" plates that he is prone to look upon anything new with no small amount of suspicion, and to hesitate consider-

ably before adopting it. History is repeating itself, and the older hands will remember how long professionals were in banishing the wet plate from their studios in favor of dry plates. The latter may be said to have been introduced ten years before they really caught on.

The early makes of isochromatic plates were expensive and perhaps not so perfect and rapid as they are today. During recent years, however, they have become as moderate in price as ordinary plates, and within the last year or two so immensely improved that for those who have not given them a fair trial the time is ripe for a study of the matter from a commercial and time-saving point of view.

The advice given to people who intend paying the photographer a visit, viz., Do not wear a red dress, as it will come out quite black, or a blue one, because it will appear as a white one, is quite axiomatic today. Yet why should the professional photographer's clients be under any restraint with regard to the colors they wear? The telling of a lady customer that her favorite red dress she is wearing will not photograph well, and that it will appear as a black one, is not likely to please the sitter; whereas if she is not told, and then finds that the proofs give a wrong idea of her dress, she may not consider the photographer's work satisfactory, and may tell her friends so. Whereas, if a photographer was careful and thoughtful enough to pay special attention to the rendering of colors in their proper monochromatic value, the fact would soon become known and his reputation and trade increase. When, further, it is borne in mind that the chief colors met with in the complexion are just those to which an ordinary plate is insensitive, it is certainly very astonishing that the yellow and red sensitiveness possessed by isochromatic plates has not seemed more worthy of attention on the part of the professional photographer. Retouching is minimized, indeed almost done away with, except in severe cases, as freckles, pimples, wrinkles (which cast a warm shadow), and other commonplace defects met with in the human face are lightly rendered. The use of isochromatic plates, however, means, when used in the studio, exposures of perhaps a little longer duration, a little more care in development, and the use of a color screen or light filter. Exposures, however, even with a screen, are not so long as the uninitiated are apt to imagine them to be.

It is, perhaps, hardly necessary to observe that a well-lighted studio is advisable, but it may be equally well illuminated by day or artificial light, the electric arc light being particularly convenient. In a studio in which daylight is employed two alternative methods are at the worker's disposal: Either the window or windows used for illuminating the sitter may be entirely covered with a yellow muslin or similar material transmitting a suitable yellowish light, or a glass light filter (or one of stained gelatine) may be used in or in front of the lens. The advantage of a glass light filter in the lens is that it may be easily removed if it is desired to use an ordinary plate, whereas if the light source be made permanently yellow, color sensitive plates must always be used.

The precise aim of the photographer needs to be considered; that is to say, the question as to whether the face or the dress and drapery should have first consideration. A very pale yellow screen used in the lens when an isochromatic plate is employed suffices to show a distinct improvement in the rendering of the flesh tones, but a deeper screen and a longer exposure is

necessary to give the monochromatic values of colored drapery more accurately. The deeper the screen and the longer the exposure, generally speaking, the darker will be the blues and the lighter the yellows and reds.

The point to consider is this: The professional portrait photographer must get all he can out of an isochromatic plate without incurring too long exposure; he must make more or less of a compromise, and must get a very much improved picture in the direction of monochromatic color rendering, if not a perfect one.

The principal color-sensitive plates may be divided into three classes, viz.: the green-yellow sensitive variety, commonly termed isochromatic or orthochromatic; the green, yellow, and red sensitive, or panchromatic variety; and lastly, the bathed plate, which is merely a medium-speed, ordinary plate bathed in a dye which confers on it not only great color sensitiveness but great speed as well.

The light filter, or screen, is as important as the plate, as the latter without the assistance of a screen would give little or no better rendering than an ordinary plate, unless, of course, a "no-screen" plate was used, a type of plate with which I do not propose to deal in the present note. There are two distinct classes of light filter for use in or on the lens: The first comprises very light yellow screens, which just insure a soft and truer rendering of the flesh tones; the second comprises moderately deep screens, which insure fairly true rendering of drapery, hair, eyes, etc. These latter screens, being of a deeper tint, necessitate longer exposure, and are chiefly for use with plates which possess very little red sensitiveness, while the very light screens can only be used with any real advantage with a panchromatic (red sensitive) or specially bathed plate.

Serviceable yellow screens quite good enough for experimental work may be easily made at home, and I give below two of the methods I have found to work admirably. A medium screen necessitating an increase in exposure of six or seven times with an average isochromatic plate may be prepared by fixing out an unexposed lantern plate, washing well, and soaking in a dye made by dissolving 3 grains of napthol yellow in 2 ounces of water. In about five minutes the gelatine upon the plate will have assumed a pale lemon-yellow tint; the plate is then removed from the dye, rinsed, and dried.

Another formula (Dr. Konig's) is for use on plain glass, and the completed screen, when properly made, increases the exposure about three times. Two solutions must be made up: No. 1. Tartrazine, ½ grain; distilled water, 1 ounce. No. 2. Gelatine, 30 grains; distilled water, 1 ounce. The gelatine must be soaked in the water for one hour and then dissolved by heat. The actual screen is made by mixing the No. 1 and 2 solutions in the following proportions: No. 1, 20 drops; No. 2, 1 ounce. Each square inch of glass to be coated needs about eight drops of the solution.

Screens made by either of the above methods vary slightly in depth of color and are quite experimental. It is advisable to make two or three and then to select the most suitable. One common defect to be found in homemade screens is that they are not optically perfect, and it must be remembered that when a large portrait lens is used, say one of 2 to 3 inches in diameter, the flatness of glass used for making homemade screens is put to a severe test, and the image projected through it may not be so clear and perfect as one would wish.

Perfect and optically plane light filters may be purchased very cheaply, and many will prefer the bought article to a homemade one. A fairly light one, say one which increases the exposure not more than four times, will be found the most convenient for average portrait work in a studio. With a lens working at F/6, a plate of 250 H and D, and a well-lighted studio, exposures of half a second will be quite possible. It is only when the weather is very dull that exposures with isochromatic plates and screens verges on the impracticable, because a "four times" screen for bright weather will require, perhaps, eight or ten times the normal exposure in a feeble light.

Experimental exposures with isochromatic plates and screens are necessary before any serious and "bread and butter" work is undertaken, and assuming the screen to require (nominally) four times the normal exposure, from three to eight times normal should be tried on the same subject, and the results carefully compared. It is remarkable what latitude is permissible, and if a plate receives twice its calculated exposure it will still yield a perfectly good negative. In other words, one may with safety overexpose an isochromatic plate (with a screen) far more than one may an ordinary plate. An isochromatic plate which is at all underexposed will generally yield a very harsh negative; it is therefore advisable to give a liberal exposure, more especially if the plate is of the ordinary isochromatic variety and not specially red-sensitive. It is also advisable to use an energetic developer without any bromide, I prefer pyrometol.

Now, a word or two in reference to the arc light, which agrees with isochromatic plates very well. When an arc light is used the best results in my opinion, and certainly the quickest exposures, can be obtained by screening the light instead of the lens—provided an open arc is employed. A holder for the light filter can easily be made with some stout iron or copper wire which is bent so as to hold the filter firmly, and to fasten on to the lamp in such a way that the filter is between 9 inches and a foot away from the light. A fairly large light filter is of course necessary, and the most satisfactory method of making one is to fix out a 10 x 12 or 8 x 10 dry plate, and stain in the naphthol yellow solution as given above, which makes a very good screen. In cases where the arc is hidden and a parabolic reflector is used, it will not be possible to use a screen in front of the light, and the screen must be attached to the lens.

Now that ready-made isochromatic plates of excellent quality are obtainable at a very moderate cost the art of bathing ordinary plates in a suitable dye has fallen somewhat into disuse. The process, however, has advantages, and many advocates prefer to prepare their own isochromatic plates from their favorite brand of ordinary plates. Very great speed is obtainable by the bathing of ordinary plates with such dyes as orthochrome T, pinachrome, homocol, pinakerdol, etc. I prefer orthochrome T unless there is very much green in the picture, in which case I prefer homocol; the former is perhaps the most useful all-round dye. Plates bathed with these dyes and used with a light yellow screen give a remarkably good color rendering, even when dark reds, green, and orange draperies are photographed; the complexion too will be better rendered and retouching minimized. The dyes named are supplied in half-gram tubes (say 7½ grains), and either dye is dissolved in 20 ounces of wood alcohol (90 per cent.) and one dram of this is mixed with 6 ounces of distilled water,

and 30 minims of ammonia (88°) added to form the bathing solution. Ordinary plates of a medium speed are soaked in the solution for three minutes, in total darkness, of course, and then washed for three minutes. Finally the plates are dried in darkness and in as warm a room as possible.

Another plan which answers particularly well with orthochrome T is to make it up into a 1 in 1000 solution with distilled water, and to make up the bath for bathing by adding 58 minims of the orthochrome T (1 to 1000) solution to 6 ounces of distilled water.

The plates are then immersed for three or four minutes, rinsed and dried as above. By using 2 ounces of alcohol and 4 ounces of water, instead of the 6 ounces of water, clean working and quicker drying plates, which do not require washing after the dye, are obtained.

Each 6 ounce mixture will serve for twelve quarter plates or their equivalent, but plates prepared at home in this way will not keep good for more than a week or two; they are at their best during the first four days after bathing. Plates made in this way are very fast, give the best possible rendering of color when a "four times" screen is used, and are extremely useful for all kinds of studio work where yellow, green, and red colors are concerned. The stock solutions given above will keep, but those diluted for bathing in will not. A safe red light may—if the worker is careful—be used until it is seen that the plates are covered by the dye solution, after which the operations must be continued in total darkness.

## THE OIL TRANSFER PROCESS*

All photographers know that the collotype process consists in inking a relief produced by the action of light on bichromate-sensitized gelatine, and in printing with this inked relief on paper by means of a press.

Mr. Rawlins stopped at the first stage. Really oil prints, from a technical point of view, are nothing else but collotype plates of a sort waiting for the pull.

The superiority of this oil process consists in the manner of inking which affords the operator a magnificent liberty of control. Its inferiority is due to the impermeability of the gelatine film on the surface of which the printing ink, which is intended for ulterior dissociation, remains entire, a mixture of pigment and oil, and in the peculiar aspect of this gelatine surface which when left uncovered, or when thinly covered, adds nothing to the beauty of the picture, not to say made it worse, to say the least.

Artists in black and white do not use double transfer paper for printing their etchings, their dry points, or their mezzotints; they have good reasons for preferring Dutch or Japanese paper. The same reasons have made me anxious from the very outset of my work in oils to take advantage of hand-made paper as a substratum for my pictures; in other words, to go a step further in the collotype process, and to use my pseudo plate as a printing plate. But I was deterred for a long period from any experiments in that

* A paper by Robert Demachy, read before the Royal Photographic Society of Great Britain.

quarter by the terrifying prophecies of divers experts in collotype, who predicted a series of dire catastrophies culminating in the final amalgamation of gelatine and transfer paper. Really these gentlemen did me good service, for I doubt if my experience in oils would have been at that time equal to the task I have since then undertaken.

My first experiments were made in unfavorable circumstances. I had no press of any kind, and was obliged to use one kindly lent by one of my friends, an etcher, whose studio was far from my work room—far enough to make me fear that my prints would dry during the journey.

I chose No. 118 Illingworth double-transfer paper, whose film takes the ink well and holds it badly, gave a short exposure, inked the prints liberally, and rushed them to the printing press packed in an elaborate arrangement made of cardboard, corks, and wet blotting paper. There was a good deal of unavoidable delay at my friend's studio, and the prints were not passed under the cylinder until more than an hour after they had been inked. Nearly all the deepest blacks remained on the gelatine, but the half-tones were splendidly transferred. The transfer paper stuck to the gelatine in several places, but it was ancient Japanese and liable in all cases to lose its fibre. On the same day, in the afternoon, I made a second trial with better success, and though my transfers were far from perfect, still they showed novel qualities that were sufficiently suggestive to induce me to buy an engraver's press and to begin a series of experiments which I pursued strenuously from December to March, when I showed some transfers at the exhibition of the paintings of the "Artistes Amateurs" Society in the Champs Elysées. Since then I have shown several at the Photo Club Salon and about fifty examples at a private show at my studio in Montmartre, where I had the opportunity of profiting by the advice and criticisms of a number of artists in black and white.

The process is, like all difficult processes, simplicity itself. You ink a print on double-transfer paper, cover it with damp paper, and press both sheets together with some appliance or other—in my own case with an engraver's press. Separate the sheets and you will find that the ink has been transferred from the gelatine to the paper; but not always with perfect success, certain conditions being necessary for the maintenance of a satisfactory average.

I would like it to be understood before entering into technical details that the instructions I am now giving in regard to the working of transfers are anything but dogmatic; I am simply telling you how the pictures that are on view this evening have been made; and I, first of all, admit that there are a hundred and one other methods of making them. In fact, any strong or prolonged pressure, from that of the office copying press to that of the steam hammer, will make an oil picture pass from gelatine to paper; and any sort of paper, rough or smooth, sized or unsized, damp or dry, will be ready to receive it. There is no secret formula about this, nothing but a recognized physical fact. But, on the other hand, if we have formed beforehand a special conception of what the transferred picture ought to be, if we have been prudent enough to build up an ideal, then the trouble will begin. It is not simply for the pleasure of an excursion into the unknown that I have studied the transfer process, but because of certain qualities in certain transfers that I had not found elsewhere. But these qualities do not exist necessarily in a transferred oil print. They are the results of certain condi-

tions which at first I failed to recognize, and which, when recognized, I found very difficult to reproduce with any degree of certainty. For instance, I can say that the velvety quality of the blacks in a successful oil transfer is due (1) to the nature of the negative; (2) to the degree of exposure received by the double-transfer print; (3) to the manner of inking the print; (4) to the nature of the transfer paper; (5) to the degree of moisture; (6) to the degree of applied pressure.

An error in one of these conditions is sufficient to impair seriously the quality of the deep shadows of the transferred picture. But even if everything has gone wrong and the beginner has sinned six times, he will still produce a transfer; and of course it will be that description of transfer that will give the process its average reputation. It has been so with oils and before that with gum.

### *The Negative*

Gum bichromate allows of a considerable latitude in the kind of negative. There are now and then happy accidents, so to speak, that enable one to obtain a good picture from an indifferent negative. In the case of oil prints this latitude is narrowed exceedingly, yet certain defects of the negative may be effectively hidden by a clever worker (note that I am not alluding to photographic values, but to the result of over- or under-exposure or of badly conducted negative development). With the transfer process the margin is still narrower.

In order to produce a mellow, velvety transfer one simply cannot do without an excellent negative, a better one even than the oil process demanded. It must be strong, detailed, and clear.

Is it not, by the way, most curious to note that the further one recedes from what gelatino-chloride workers call "photographic quality" the more one feels the need of an excellent photographic negative? I have had numerous and painful opportunities, outside my own work, of inking prints from inferior negatives at the practical lectures on the oil process organized by the Paris Photo Club, which include the teaching of transfer work, and not one of these carefully inked and re-inked prints ever yielded a satisfactory transfer.

### *The Gelatine Papers*

On this subject, as on several others later on, I shall be obliged to keep within the limits of my own experience. I do not know how bromoil papers will behave for transfer work, never having inked a bromoil print in my life. The papers I habitually use are Lamy, Illingworth, and Autotype double-transfer papers. They all work beautifully, though some can furnish a greater number of pulls than others.

### *Inks*

It is the same with inks. I have tried quite a number of samples and have ground special inks myself (I have not had the opportunity of trying the English specimens of oil paints), but finally have come back to those I have been using for the last four or five years, Taille Douce and lithographic encre machine, to which I add collographic ink in various proportions.

In fact it is the Taille Douce ink that gives the richest tones, but it is not tacky enough to be employed pure. It is better mixed with collographic or lithographic ink.

### *Papers for Transfers*

Any kind of paper will take a transfer, and interesting experiments may be made with unusual brands. I have a preference for Dutch Van Gelder

paper and for French Arche paper. There is a sufficient variety in grain, degree of sizing, and color in both the Van Gelder and Arche papers to meet all requirements.

### *The Press*

I use a copper-plate press for my transfer work; but other photographers, M. Billard for instance, have made experiments with an ordinary copying press. The results are somewhat different; up to now I still prefer the effect of linear to that of platen pressure. This last style of pressure will succeed better with the majority of photographers because it reproduces detail with superior sharpness.

### *Exposure and Inking*

Whatever sort of press has been adopted, certain precautions have to be taken in the exposure and inking of the oil print. The exposure must be short. Of course there is a limit, and that limit is the subsequent impossibility of making the ink take elsewhere than in the shadows of the picture. But it is from this limit that the time of exposure must be worked up to normal. Avoid over-exposure, above all, for transfers from over-exposed oil prints, even if the print has been worked up to what appears proper contrast by skilful local manipulation, will be soft, woolly, and insipid.

But even a properly exposed print from a good negative will not yield a satisfactory transfer if it has been inked according to the habitual standard. Usually at this point it would be pinned on to a drawing board and set up to dry; but, if it is intended for transfer, the shadows and especially the darkest blacks must now be overcharged with ink. If not they will come out gray on the transfer paper. On the contrary, the half-tones and high lights will be left just as they are, for they will pass as they are from gelatine to paper. The explanation of this peculiarity will be found in the behavior of different layers of ink according to their level. The ink layers covering the gelatine reliefs being thinner and also at a higher level than the rest will pass easily on to the transfer paper. It is the same thing with semi-high lights and half-tones, but the deep blacks being on a lower level sustain less pressure and are less in contact with the transfer paper. Their surface must be raised by extra inking to that of the half-tones. Other factors come into play, but the most important are no doubt those above described.

Still, even though the exposure and inking have been successful the transferred picture may be bad, if the transfer paper has been wetted too liberally. It is difficult to express in words the precise degree of dampness required. Only repeated trials will enable us to ascertain this. That is the worst side of pictorial processes—one cannot write out a nice compact formula for the use of indolent workers. I can only say that the transfer paper must be allowed to dry to the point of having lost all visible surface moisture, but without any dry patches being apparent when held against the light. It must be supple and cool to the touch, and without any tendency to cockle.

But I hasten to add, in order to suppress ulterior discussion, that absolutely dry paper will take a transfer easily; the result, however, will not be the same, and the difference will be perceptible to any artist who has worked at transfers for some little time.

The importance of a correct degree of moisture in the paper will be evident to anyone who has some idea of the reasons for which a transfer takes

place. There must be some reason for the ink to quit one support for another. If there were none, no amount of pressure would enable us to make an oil picture pass bodily from gelatine to paper. It is easy to explain this state of things, without explaining anything at all, by ascribing it to a matter of affinity. But as this affinity changes according to the degree of moisture, and as we know by experience that wet paper loses all affinity for ink, we may draw the following inference from the above fact, viz., that water repels greasy ink, and that a transfer can satisfactorily take place from gelatine to paper only when the paper is less wet than the gelatine.

But it does not follow that the drier the paper the finer the result. There is an intermediate degree, between wet and dry, which adds to the completeness of dry transfer the mellowness of damp transfer.

May I venture to answer, before they are made, certain criticisms that are easy to foresee? It will be said that transfers from oil prints are not photography. I admit that the pigment on my transfers has been fixed on paper by pressure, and not by the direct action of light. But this pigment has been bodily transferred from a relief produced by the direct action of light. In the carbon double-transfer process the final transfer paper has not been sensitized either, the only difference being in the fact that the pigment in the carbon process is mixed with the gelatine before light action has taken place, while with oils it is applied after. The fact of passing a photograph from one support to another is not enough, I should think, to rob it of its name.

Lastly, the peculiar aspect of these transferred oil prints will probably shock these same photographers who disfigure their negatives with paint, methylated spirits, pumice stone, and penknife work to such an extent that renegades like myself hesitate to recognize them in their latter state as negatives. They will accuse me, no doubt, of plagiarizing engravings, because of a print mark somewhat like a plate mark, which is unavoidable, and because I use engraver's ink and Dutch paper. It must have been much worse in the "fifties" for the first photographers who printed on salted paper after the Daguerre silver plate was superseded. All new processes are antiphotographic until a newer one comes in, and this one is our old and ugly friend, collotype, partly modified as to the method of inking for the use of pictorialists, but still collotype.

## THIRD CONGRESS OF PHOTOGRAPHY

### Held in St. Paul, Minnesota, 1911

(Concluded from page 476)

President: I will have to declare that out of order. The question before the house is whether this shall be adopted as a whole, or not. I take it that the argument here, which I believe to be in order, is against adopting this as a whole.

Mr. Egan: I move you, as a substitute, that this be taken up section by section.

President: Your motion to substitute is lost for want of a second.

Mr. Snow: I substitute this motion, that there be a committee of five appointed by the chair to go over this

proposition and report it back to the next meeting of this Congress and then we can recommend what that committee recommends, if we wish, to the State associations, and we will have that where we want it. Motion seconded.

Mr. Egan: I don't believe we would be any further advanced than we are now really by the voice of five minds. Why not take it section by section now, and get rid of it. (The substitute motion was put, and lost.)

President: The original motion is that this be adopted by us and recommended by this Congress.

Mr. Harris: I wish to call you to order. There is no such thing as this Congress recommending this motion. We ask that it be sent to the States without any recommendation.

President: The original motion is that this matter be referred by the Secretary to all State associations, with the request to report before the next annual meeting. Motion lost, by rising vote.

Mr. Harris: I don't think that any one part of this is any good without it all. If you change this per capita scheme you have got to change something else. You cannot ask a State to come up here with a lot of delegates without any members, and ask those people not to do anything when they come here. If you have got some work for them to do, make it interesting, so that they will come, because they have that interesting work, or else make them pay for it like we are doing now. The question, was, how you were going to make this Congress any better, if you will give it to them for nothing, and not make their work more interesting than they do, consequently I say, make them pay for it, as you are now, and I move you that we close this by tabling the rest of these propositions.

Mr. Snow: The idea is that there are some things in there which we do not want. The natural idea was to weed those out and just leave what we want and send that to the State associations. Your opinion is one opinion; there will be five opinions then, if we have this committee of five.

Mr. Holloway: If you appoint this committee, wouldn't it be well that the committee know the concensus of opinion of the members of the Congress, or these different sections? How can the committee work intelligently unless they know?

President: There is no committee in contemplation, and no question before the house. The motion is lost. I don't believe you are in place on that; you have no right to take up the time of this meeting in explanation.

Mr. Holloway: I move you that we take up this section by section, and that the members of the Congress adopt what they like and reject what they do not like, and then the committee can be appointed and draft it into suitable form.

Mr. Egan: I second the motion. Motion carried.

Secretary (reading): "I have attended many of the State conventions held this spring, and am satisfied that if we could devise a plan that would do away with the per capita tax, and make our State associations representative to the Congress upon the basis that we are to have two representatives from each State society, then we would have no trouble in getting every State in the United States and Canada interested.

"The adoption of this plan would be to make the Congress like the Senate of the United States. No matter how large a State organization may be, two men would represent that State organization."

Mr. Harris: I move you that we refer this particular clause to every

State convention and ask them to give us a better idea of dues than we have now. Motion seconded.

Mr. Ackerman: The clause says that this recommendation shall carry with it the appointment of two members from each State society. I would like to inquire, on behalf of the New England Association, for some information with reference to representation, whether or not the membership there shall consist of two members, or whether or not it shall consist of two members from each State?

Mr. Harris: My motion is that—we don't know what to do with it, and consequently we are going to ask the whole Association, and all other associations, if you please, prepare a good scheme and bring it here next year.

Mr. Holloway: Here is what I am trying to get at. Why ask the State associations' advice before you ask the members of the Congress' advice about these things? We have the first say in that. We can recommend and reject the State if we want. Our advice ought to be asked first on these questions.

Mr. Lewis: We have—I presume these are voting members. We have the New England States, Pennsylvania, Virginias, Carolinas, and Ohio, which represent a great many photographers. How many representatives from these States?

President: Well, we have about 30 representatives and alternates here, not counting the past presidents.

Mr. Harris: There are two from Pennsylvania, four from Iowa, one from Ohio, and one from New England.

Mr. Lewis: Do you know how many photographers these States represent? I am trying to find out what kind of an equality there is on this floor. There is one man from other States and represents the whole lot of States and one voice, and if you put in two men from each society it comes down to a matter of what societies are eligible to a membership in this Congress. In Ohio we have two. We have one-and one-half representatives. Mr. Moore represents Ohio-Michigan, I represent Ohio, another man comes here and represents Michigan. There are three from two large States. We have not any two representatives from any of these societies, because they are not big enough. There are ever so many societies here, according to the number of representatives on the floor, which must be large societies. There must be a good many of these societies over 50 in membership, and if we appoint two to represent any State, no matter how small the organization, every State in the Union can get three men together and organize and have two representatives. They can organize a society and come here and represent that State, where there are no photographers at all to speak of.

Secretary Tyree: Another thing we must think about, and that is in regard to the past presidents being members of the Congress. You know that would mean that Indiana, where I think they have a president born every two or three years—Indiana would have somewhere about six representatives. You have to think about that, too, if you put the past presidents in.

Mr. Leschinsky: I move you to lay this on the table until the next meeting. Motion seconded and carried.

President: Now a matter that I wish to bring to your mind is the fact that this question of the dividing line is going to be brought before the National convention, not for action this morning, because it carries with it a constitutional amendment. That is my understanding, that the line as suggested was adopted by this Congress unanimously. Am I right? Is there a dissenting voice to that on the floor? Now the point I wish to

make is this. You are all honorable fellows. If this requires oratory and argument when this question does come before the National Association, for action, I certainly hope that every member of this Congress will be there on the floor ready to fight for what he believes is right, if necessary. I don't believe that we have a man in this Congress that will fight on the other side. If so, he should have fought in this Congress, because we should go in the meeting as a united body on this particular question. We carried it unanimously without a dissenting voice. Am I right?

Mr. Egan: I rise to a point of information, that is all. I have had in mind for a long time that we ought to save something, to save our pocketbook some insurance rates. It seems to me that we are paying an exorbitant rate, and we cannot get into a building without raising the insurance rates, and we have not anything in our studios nowadays that will burn at all. Why should not this be taken up by the board and see if we can't change these rates?

President: I would suggest and recommend that any member of this Congress that has a subject of any kind that he wishes to bring before this body, he should prepare it in a definite way, in writing, in order to save time, and I will assure you that this Congress will stay in session until you get a chance to bring anything that you wish before it.

Mr. Holsinger: I move that we adjourn until this afternoon at four o'clock, in the room to the right as you pass out. Motion seconded and carried.

### Third Session, July 26

President: We have the minutes of the two preceding meetings, prepared by the stenographer.

Secretary: We have a full record here of the first meeting, and the minutes of the next meeting. (Minutes of the two meetings are read, corrected and approved.)

President: Gentlemen, what is your pleasure, shall we take up the tabled proposition and dispose of that first?

Mr. Holsinger: I move that we take up new matters.

Mr. Harris: I second the motion.

President: The intent is to postpone further consideration of the President's suggestions at this time. Motion carried.

President: What is your further pleasure?

Mr. Leschinsky: I have a resolution which I would like to bring before the Congress:

"Inasmuch as the photographers of the nation have taken steps for closer relationship in the creation of this 'Congress of Photography,' in which the various State organizations are represented, the fundamental principles of its existence being unification and advancement of the Photographers and State Associations, we therefore believe that some system of standardizing the judgment of State and Interstate exhibitions at our various conventions should be adopted.

"In order to properly bring about such a system and intelligently have it brought before this Congress, I move you, Mr. President, that a special committee of three be appointed by the chair to consider ways and means of securing this result, and that they be requested to report at this session."

President: Gentlemen, you have heard the reading of the resolution. Seconded.

Secretary: There are a great many who do not seem to understand it. (Secretary re-reads resolution.)

President: Do you mean this particular session, or this annual session?

Mr. Leschinsky: This annual session. The idea is that you divide things up into districts, and get four or five States, call it a unit, and the changes are selected by series; I have it all down in writing, my proposition, if the Secretary will read it you will get better information than I can give you, probably. The whole plan is laid down.

Secretary (reading): Your committee, appointed to draft a measure providing for the standardizing of our State and Interstate exhibitions desire to report that we have gone over the ground carefully and believe there is great merit in the plan herewith proposed, viz:

*How Selected*

That a board of (  ) judges be appointed by the President of the Photographers' Association of America, with the presiding officer of the Congress of Photography and two other members elected, one each from the Photographers' Association of America and the Congress of Photography.

*Term of Judges*

The judges thus appointed shall serve for three consecutive years, and shall be selected because of their fitness and ability to act in this capacity, and shall be appointed according to their geographical location to the unit of State organization they shall serve, as per outline on enclosed map.

*Unit of State Organization*

Five or more contiguous State organizations shall comprise a unit.

*Duties of Judges*

The duty of the judges are to judge the exhibits of each State or Interstate association in his unit according to the rules and regulations of said Association.

*Expense of Maintenance*

The necessary railway and hotel expense of the judges shall be paid by the State Association when services are rendered.

*How Vacancies May be Created and Filled*

The President of the Photographers' Association of America shall have power to remove any judges for incompetency or neglect of duty or fill when it may occur. Said appointee shall be a resident of the same unit of State organization in which such vacancy may exist.

*Appeal*

There shall be no appeal from the award made by the judge, but he may be requested to give his reasons for decisions rendered when applied to by the President of the Association he may be serving.

The judge shall select one portrait from the exhibit, said portrait to be the one having the highest degree of merit, or if he prefers he may be at liberty to exhibit one portrait that expresses the ideal for which he contends, thus establishing the standard.

We do further recommend that if this measure is adopted that the representatives here assembled use their influence with their respective State associations in securing their approval and adoption of this plan.

Respectfully submitted.

President: With your advice, I would rule that the discussion at the present time on this question be limited to the particular question of whether or not such a committee should be appointed by the chair. Are there any remarks on the question? It has been moved

and seconded that a committee of five be appointed on this proposition.

Mr. Holsinger: It seems to me that we are up against the same thing there that we have been in selecting judges to award our prizes who are capable judges. We had the same difficulty in grading our Academy, who were worthy and who were not, and in selecting our officials for the Association, who would be judges of these pictures. It would be necessary, then, to get capable judges as officers, and then our Association might suffer. In order to have a first-class Association we must have, more than all, executive ability, and this kind may not be capable judges. That is one objection I see to that. The other objection, of knowing who were capable of being these judges. You might get a judge that could set a certain standard one year, and another judge set a certain standard another year, and you would have us all confused.

Mr. Leschinsky: I want to inform you that he could be appointed for three years, so then we would have a standard for at least three years before you changed again.

Mr. Holsinger: How could the officers of the Association be judges for three years?

President: Ladies and Gentlemen: In order to facilitate the business here, please confine your remarks to the advisability of referring this to a committee or of appointing a committee at the present time.

Mr. Hardin: I would like to ask Mr. Harris about his judgment of the persons—of those who have prizes now.

Mr. Harris: I don't believe there is more than one-third of the staff in Milwaukee that have prizes at this time. I will say one-third so that I will cover the whole thing. There is a feeling among all the State officers and State members not to take prizes anymore. We get twice as many exhibits. The States that don't have prizes don't want them at all, and we could not coax the State of Pennsylvania, my own State, to begin to have prizes. Another thing. Where are you going to stop when you come to deciding on who can be a good judge. I may be a judge of three or four conventions, the one examination comes along and you cannot agree at all on pictures, and you cannot find two men anywhere who can agree on pictures. They absolutely have a different opinion. How can you expect us to agree on pictures. As judges we would go out and would not agree at all, and I am absolutely against the proposition.

Mr. Snow: I move you that this question be laid on the table, of the appointment of a committee for the consideration of this resolution. Seconded and carried.

Mr. Holsinger: I would like to amend the Constitution, Section 1, by striking out the words:

"Section 1. The active members of the Association shall be owners, part owners or managers of studios—active members in good standing of State associations paying the per capita tax provided for in Article IV, Section 1—and such photographers, owners, part owners or managers of photographic studios and editors of bona-fide professional photographic magazines (trade organs excepted) not members of affiliated State organizations, who shall pay the initiation fee and annual dues provided for in Article V, Section 1."

I would like to amend that by striking out the words: "and editors of bona-fide professional photographic magazines (trade organs excepted)."

I cannot quite understand why they should have a voice on the floor any more than Mr. Harris, who is a photographer, should have a voice before the

(Continued on page 513)

By Ernest Gall, Adelaide, South Australia

By Ernest Gall, Adelaide, South Australia

By Ernest Gall, Adelaide, South Australia

By Ernest Gall, Adelaide, South Australia

By Ernest Gall, Adelaide, South Australia

1. Portrait of Himself
2. Sasikia
3. Portrait of a Man
4. Rembrandt's Wife

*Illustrating Sidney Allan's Article*

5. Portrait of Himself
6. Portrait of a Man
7. Portrait of Himself
8. John Sobieski

*Illustrating Sidney Allan's Article*

9. Man with Copper-colored Nose
10. Portrait of an Old Woman
11. Portrait of a Rabbi
12. Portrait of a Lady

*Illustrating Sidney Allan's Article*

# MASTERS IN PORTRAITURE—REMBRANDT

BY SIDNEY ALLAN

Of all artists, Rembrandt van Rhyn is perhaps the one that is most dear to the Anglo-Saxon mind. Like Shakespeare's dramas, his paintings represent to us one of the great art expressions of all times. It is difficult to classify him, he was so universal and proficient in all the various phases of his art. Although no idealist in his personal expression, he understood how to imbue every object with a deep spirituality, and it is this spirituality which appeals to art lovers even more strongly than his wizard-like technique and profound knowledge of life.

His portraits have the same characteristics as his larger compositions. He represents the soul-life of people. They become alive under the magical touch of his brush. Technically this was brought about by the wonderfully accurate reproduction of outward appearances and his mastery of chiaroscural problems. The expression of light and shade became to him the vehicle of both imagination and emotion. Deprive Fig. 4 (the portrait of his wife, Saskia, as a young girl) of the peculiar light effect, much that can be admired will still remain; but the principal charm, the finest essence, the soul of the picture will be gone.

For years the art world has made use of the term Rembrandt lighting. I think it is largely a misapplication. Rembrandt was so versatile in his light and shade improvisations that it would be difficult to express it by one pattern. Rembrandt lighting was considered a system of lighting in which the lighted side of the face was opposed to a dark background, and the shadow side opposed to a light background. Now, study the twelve accompanying pictures, twelve masterpieces of portraiture; you will not find a single one where this scheme is exactly carried out. There is a frequent juxtaposition of light and dark, but it is generally a lighted cheek against a profusion of dark hair. Fig. 1, perhaps, comes the nearest to it. There we see a streak of vivid light along the upper arm on the shadow side of the picture; but the other side of the background is almost equally bright. In Figs. 2. 5, 6, and 10, we have a similar scheme. He apparently had a special preference for lighting up the opaqueness of the shadow side with a glimmer of light; but we do not notice it in Figs. 4, 9, and 11. In Figs. 6 and 12 the lighting comes more from the front, but the treatment of the background is very much the same as in Fig. 7.

We notice, however, that the painter was very fond of contrast, and strong contrasts are naturally best produced by a juxtaposition of light and dark, and he used this device most effectively in the majority of his portraits. I will even give in that it became a mannerism with him; but he invariably followed the whims of the moment, the dictation of his eye, which by long experience knew where an accidental touch or shimmer would add to the picturesqueness of the composition. It never became with him a stereotype system that had to be carried out at every instant. And that is where his imitators fail, and we surely pay no tribute to the painter's genius if we consider every crude adaptation of his style a work of artistic merit.

It seems to me that his light and shade composition was guided largely by the costume of his time. Men wore wide-brimmed hats, very much like ladies do nowadays, and so he used them to best advantage (*vide* Figs. 1, 5, and 7) by having the brim shade the forehead and eyes, showing the latter through translucent darkness in subdued brilliancy. With him light had to illumine every nook and corner. He wanted no complete darkness, no opaqueness—everything had to vibrate with air and reflected light.

The costume itself was picturesque at that period. Men still wore armor, chains, and embroidered knee breeches. No painter has ever made use of accessories in such a beautiful and convincing manner. Everything that was unnecessary he eliminated, drowned it, as it were, in transparent shadows and one dominating tonality; but any object that was beautiful in itself, as a chain, a ribbon, or a piece of gold or silver lace, he would depict in vague outlines, preserving the form by dozens of high lights and thereby producing quaint designs that would embellish the large dark planes that we invariably find in his bust portraits.

Fig 4. looks as if it were painted in candlelight or the light of a lantern. The source of light was very near the face, or the dividing line of light and dark could not be so sharp on the lower part of the bust. But the effect is startling—poetically beautiful at the same time—and that is no doubt what the painter wanted. As I have said at the very start, light was to him the great spiritualizer. It brought out unforseen beauties. The face became animated as with an inner light.

Some of the light schemes are more ordinary, Figs. 2, 3, 10, and 12, for instance; but the division of light and dark planes is always masterly. Rembrandt did not model his faces by subtle values, but by strong contrasts. Why did he depict the "Man with the Copper-colored Nose" (Fig. 9) in an even light? Because the man is old; his face shows too many wrinkles; there would be too profuse a differentiation of small light and dark planes in any other light. The very contrast he made use of consisted of the juxtaposition of the white beard and the uniform middle tint of the upper part of the face. This is a wonderful lesson, and nearly everyone of his pictures can teach us an equally valuable one.,

In Fig. 11 we notice that as soon as there are other objects of interest besides the face (as the hands, turban, and various ornaments in this picture), the lighting of the face becomes less strong—the face must produce its effect as a large plane and not by a variety of minor contrasts. In Fig. 10, hands, cap, and collar are all light, so he used more forceful drawing, but did not accentuate the high lights and shadows. If he had done so, the face would have lost in importance.

Also much information can be gained by studying the arrangement of the general outline against the background. Figs. 1 and 3 are rather indifferent. A three-quarter view in an oval never looks as well as a symmetrical front view; but Figs. 6, 7, and 8 are excellent in that respect. Notice how the feathers and brim of the hat have been utilized in Fig. 7, and the contour of the hair in Fig. 6. In Fig. 5 the division of space is unsatisfactory. There is a confusion of lines, and the face is too low in the picture. In Fig. 8 the outline is less clear than in Fig. 6 or 7. There is a reason for it. The costume of King Sobieski is so gorgeous, and there are so many objects of interest, that a clear contour would make us feel them too much; there would be too many lines, and the face would no longer be of sufficient im-

portance to control and balance the other objects.

In Figs. 2 and 4 we have the suppressed outline. It is partly lost in the background. Rembrandt seemed to favor this arrangement in his representations of women. It lends more mystery to their form and permits of a subtler concentration of light. The illumination of Fig. 2 as well as Fig. 4 would be impossible to Fig. 12. Either the outline had to be blurred into the background or the background made considerably lighter in parts.

Thus, every one of Rembrandt's portraits offers opportunity for speculation. "How would it be if this were different?" or, "Why did he treat it in this way and not otherwise?" could be asked in every instance. And by trying to answer these questions we become acquainted with the intricate mechanism of composition.

## AN AUSTRALIAN PHOTOGRAPHER-ENGRAVER

FROM one of our Australian subscribers, Mr. Ernest Gall, of Adelaide, we have received a very fine collection of photographs and an interesting letter. We are glad to reproduce a number of the photographs and give some account of the man and his methods as gathered from his letter.

It will be seen from our illustrations that Mr. Gall is not a specialist. He does not confine his efforts to photographing men only, or children only. He does not even confine himself to portraiture, but takes hold of commercial work that offers. His work, however, does not suffer in comparison with the work of our specialists and would hold its own with the best to be seen on Fifth Avenue.

Mr. Gall believes in making the

mount fit the print. Special care is given to the trimming of studies, and then the mounts are cut to suit the prints, and not prints cut to fit or misfit stock sizes of mounts. This method gives a feeling of freedom, when focusing up the model, that is absent if some definite oval, circle, or other "shape" has to be slavishly "filled up" on the screen. The reproductions of the woman and child, the two children, and lady with letter are examples of this method. The plain backgrounds used are of an even tint all over—all gradations being obtained by the lighting.

The fruit exhibit (p. 507) is a straight print from an unfaked negative. The atmospheric haze was introduced during exposure to throw the emphasis on the one exhibit.

Mr. Gall advocates the use of good business stationery. His letterhead is lithographed in black on "Original Turkey Mill," one of the best brands of letter paper made in England. The effect produced is reminiscent of a new Bank of England note—the best black and white effect we know.

Another interesting print in the collection is a view of the inside of the head of "Miss Liberty," the towering goddess of New York Harbor. It is from a negative made by Mr. Gall in 1891 on a stripping film in one of the first patterns of the kodak.

Not the least interesting thing in the collection is a "rubbing" from the backs of WILSON'S PHOTOGRAPHIC MAGAZINE in Mr. Gall's library. It is two feet long and covers eleven years of the magazine.

The two illustrations below show the different states of the commonwealth of Australia and its great size. Europe being nicely tucked away in the middle of the "island."

The Commonwealth of Australia has much in common with this country and deserves to be better known here. The following figures supplied by Mr. Gall will give an idea of the country's activities:

*The Commonwealth of Australia.*

Area 2,974,581 Square Miles

| | |
|---|---|
| Population (1911 Census) | 4,449,493 |
| Imports (1909) | $245,625,101 |
| Exports (1909) | $313,530,413 |
| Mineral production (1909) | $110,616,778 |
| Agricultural production (1909) | $197,068,800 |
| Wool exports (1909) | $122,318,928 |
| Factories (total number) | 13,197 |
| Factories (hands employed) | 266,405 |
| Wheat production (season 1910-1911) (bushels) | 95,298,000 |
| Banks of Issue (total on deposit, 1910) | $623,477,453 |
| Savings Banks (standing to credit of depositors, 1910) | $254,963,990 |
| Savings Banks (average per depositor, 1910) | $172 |
| Savings Banks (depositors, 1910) | 1,483,573 |

# A CONVENIENT AND COMPACT RACK FOR DRYING MOUNTED PHOTOGRAPHS

BY BRYAN P. O'NEILL

HAVING seen from time to time mention of different styles of drying racks for drying freshly mounted photographs, and also knowing how the average photographer spreads his work to dry on tables, boxes, chairs, and on the floor, at the mercy of all intruders, from cats and dogs to humans, I thought it might interest and be of some profit to some of my brother photographers, who have been drying their work as stated above, if I give a description of a very inexpensive and simply constructed rack that in my estimation is far ahead of anything of this kind I have seen described up to the present time.

It consists of five shelves supported by four uprights, placed one on each corner of shelves, with a small base extending under across the ends of bottom shelf and under the bottom of each pair of uprights, so that the whole rack will stand upright on floor or table. The shelves are placed so

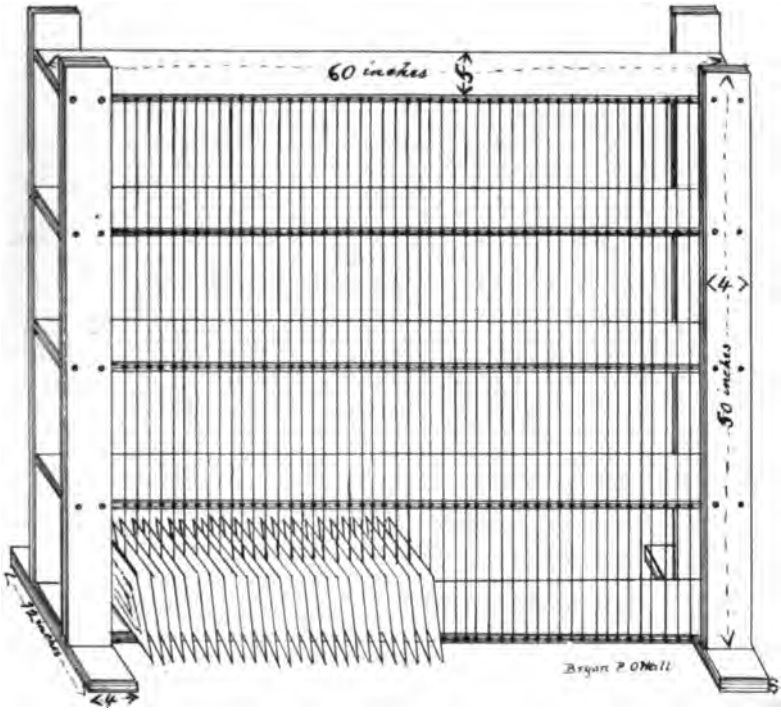


far apart that the largest card intended to be dried on the rack can slip in on edge with ease between the shelves.

When the rack is constructed thus far it will have the appearance of a set of bookshelves. To complete it, brass wires are stretched perpendicularly one inch apart on the front of the

shelves and fastened to the front edge of each shelf at the point of intersection, so as to hold their position and form narrow compartments, into each of which the freshly mounted prints are slipped, with the picture side inclined toward the bottom of rack, as shown in cut.

The accompanying cut will give a clear idea of the construction and use of the rack. The rack shown in cut will hold two hundred pictures at one time, any size up to and including 10 x 12.

I have had a rack of this construction in use for the last two and one-half years and find it to be very satisfactory.

Dimensions of material used in construction of rack: Five shelves, 60 inches long, 5 inches wide, and ½ inch thick; four uprights, 50 inches long, 4 inches wide, by ½ inch thick: two base pieces, 4 inches wide, 12 inches long, and 1 inch thick; thin brass wire.

## BRITISH COPYRIGHT REGISTRATION

BY E. J. CURTIS

No doubt many of the readers of this magazine will appreciate these few particulars concerning English copyright registry; in fact, articles written under the heading of "Copyright," I think, always contain something instructive, something which possibly one may have read previously, but which only instruct further by reading again. It is one of those subjects we can always learn more about, hence I trust the following will prove interesting to all whom it may concern: Under the provisions of 25 and 26 Victoria, c. 68 (The Fine Arts Copyright Act, 1862), the author, being a British subject, or resident within His Majesty's dominions, of every original painting, drawing, or photograph (not sold before July 29, 1862) has the exclusive right of copying, engraving, reproducing, and multiplying such painting or drawing, and the design thereof, of such photograph, and the negative thereof, by any means or size, whether made in the King's dominions or not, for his life and seven years after; but any other person may represent the scene or object represented by such painting, drawing, or photograph. The copyright of any painting, drawing, or negative of a photograph made for or on behalf of any person other than the author, for a good or a valuable consideration, belongs to such person.

Upon transferring for the first time the ownership of any painting, drawing, or negative of a photograph, the copyright must be transferred or reserved by agreement in writing, or it will cease to exist.

No proprietor of copyright conferred by the Act 25 and 26 Victoria, c. 68 (which does not extend beyond the limits of the United Kingdom), is entitled to the benefit of the Act until registration, and no action can be maintained nor any penalty recovered in respect of anything done before registration.

Registration is effected by the proprietor delivering or sending by post prepaid to the Registrar, Stationer's Hall, London, E. C., a signed memorandum of such copyright, with a fee of one shilling. Special care should be taken to describe the work as a "Painting," "Drawing," or "Photograph," as the case may be, adding a short description of the nature and

subject of the work, and annexing, whenever practicable, a sketch, outline, or unmounted photograph. The name of the actual author should be inserted as author of the work.

Assignments of copyright under the Act must be made by some note or memorandum in writing signed by the proprietor of the copyright, or by his agent appointed for that purpose in writing, and must be registered at Stationer's Hall. This is effected by lodging there for entry in the "Register" a memorandum signed by the assignee, with a fee of one shilling.

The memorandum for registration of a copyright or assignment must be in the form obtainable only from Stationers' Hall; price, one penny.

Certified copies of entries can be obtained on payment of a fee of five shillings, and such copies are *prima facie* proof of the matters alleged therein.

By the International Copyright Act, 1886 (49 and 50 Victoria, c. 33), the Fine Arts Copyright Act, 1862, is made applicable to paintings, drawings, and photographs first produced in a British possession, registration of the copyright in London not being required if the law of such possession provides for the registration of such copyright.

By the United States of America Copyright Act of March 4, 1909, which came into force on July 1, in that year, and the Proclamation of President Taft of April 9, 1910, the copyright in Works of Art secured by that Act is extended to the works of British subjects.

Searches in the "Register" can be made at the Stationers' Hall on payment of a fee of one shilling for each entry searched for. Applicants not conversant with the mode of registration are recommended in all cases to forward with the demand for registration a copy of the painting, drawing, or photograph to be registered, that they may be compared before entry, as no alteration can be made in the "Register," or any error corrected, except by an Order of the High Court of Justice, or one of the Judges thereof.

In communicating with the Registrar, a stamped and addressed envelope must be enclosed whenever an answer is required. Postage stamps are not received in payment of any fees, and postal orders and money orders must be made payable to "The Registrar, Stationers' Hall, Stationers' Hall Court, Ludgate Hill, London, E. C."

*Dead-black Varnish.* To make a dead black varnish, take a little of the celluloid syrup and dilute it with acetone until it is of a convenient consistency for application with a camel-hair brush. Then add lampblack until the mixture gives a perfect black when applied with the brush to a piece of smooth wood or metal. It must, of course, be stirred well to produce a perfect mixture. If it becomes too stiff for use dilute with a little more acetone and add a few drops of the syrup. The varnish should be applied with a soft brush, and it is generally best to give a second coat after the first one is dry. The result on either wood or metal is a fine dead black, but rubbing will tend to make it shiny. This defect is, however, common to all varieties of dead-black varnish, and there is no method of preventing it.

EXPOSURES in rain should not be too long. The light is generally not so weak as it is when the sky is overcast and no rain is falling, or rather the exposure may be shorter, as the heavy shadows of the picture are certainly not so dark in rain.

AN INCIDENT OF THE BRIDGEPORT CONVENTION

**Presentation of the American Colors to President J. H. Garo at the Bridgeport Convention by I. M. C. Stone**

(Continued from page 496)

board of directors of a factory in which he is the official photographer or something like that.

President: At the present time, Mr. Ackerman is here with credentials from the New England Association, not as an editor, but as an owner, or at least a part owner, of a photographic studio, and it does not apply particularly to him.

Mr. Holsinger: I would not want it to apply to him this year particularly, but it is a part of my motion. I put as a motion that we recommend that Section 1 be amended by striking out those words. Motion seconded.

Mr. Lewis: We put that in only two years ago, and the man who got it put in, Mr. Abel, is sick in bed in New York, and Mr. Ackerman is here representing the Association, and I think in justice to Mr. Abel particularly, Mr. Ackerman ought to be here to speak for himself, and, moreover, Mr. Ackerman is serving now, and anything that is talked over now by the Congress must of necessity be as a delegate from New England Association, and not as a stenographic editor. I think this was carried unanimously at the time, and Mr. Abel is now ill and in bed, and it does not look to me exactly courteous to say at least whether it is advisable or not from another standpoint. It is not courteous for us to take that question up.

Mr. Harris: If you will allow me, Mr. Abel has suggested this thing. He says that he finds that it is not working in the way that he expected it would. He is perfectly satisfied as far as he is concerned.

President Lorrimer: The chair will state to you that Mr. Abel has told me that he thought it should be done, and that it should be changed. (Enter Mr. Ackerman.)

President: Mr. Ackerman, the motion before the house is a motion to recommend an amendment to the Constitution by striking out the words from Section 1: "And editors of bona-fide professional photographic magazines (trade organs excepted)," in relation to Active Members. This resolution has been made, seconded, and is open for discussion.

Mr. Ackerman: Speaking for the Photographers' Association of New England, I desire, for the sake of the record, to express the sentiment of the President of that Association, and in doing so I may inject a few remarks which represent my own personal views upon the matter. These views you will please permit me to make in spite of the ruling of the chair that no speeches were to be made. The President of the New England Association, in giving me my instructions, conveyed to me, very strongly, the idea that the photographic organization of the size and scope of the present National organization should be comprised of professional photographers only. In doing this, Mr. Garo, in my opinion, has voiced the sentiments and opinions of every professional photographer now a member of the New England Association. It is not within the province of an organization comprised of men in one line to admit within its ranks men in any other line. The profession of photographic journalism, as I understand it, or of journalism in its broadest sense, constitutes an entirely different phase of operation from the operation which characterizes a meeting of men engaged in working for their living in an entirely separate and distinctive field.

President: I would like to ask the speaker—

Mr. Ackerman: This is for the sake of the record, and, perhaps, is the last time I will have the honor of appearing upon the record, and I ask the leniency

of the chair that I may be permitted to say, if I myself alone—

President: The speaker, Mr. Carl Ackerman, asks, I believe, the unanimous consent to extend his remarks here at the present time, contrary to the ruling of the chair and without the unanimous consent, I shall certainly have to call him down; it is up to you.

Mr. Ackerman: I wish to explain to you now at this time the relationship which exists between the members of the photographic fraternity and the members of the press, and the organization which you have at this time in session. The press is sponsor for many things. It is the censor for many things. It stands as the guardian not for the things which you may do, or the things which you may not do, but for the things which are embraced and which you act for as the representatives of all the photographers of the nation. And certainly, quoting Mr. Garo, newspaper men, press men, or magazine men are not qualified for membership in your organization. They are not qualified for membership in the Congress, because the things which you do here they may have to criticize. The photographic journalistic field is a narrow field. In it, directly interested in the welfare of the photographer, there are, perhaps, three or four or five men. One of them started out to become interested. Now there are two; perhaps there will be three; by and by there will be four; if you get them all here with you, what protection have the members got who are represented here. Who shall criticize you. Who shall stand guard for the men outside, the men who don't know the operations? No one. (Applause.)

Mr. Harris: Why this talk, when you have already pretty near decided not to have this any more?

Mr. Ackerman: This is for the sake of the record, Mr. Harris. What you do here you will do for yourselves.

Mr. Harris: I ask for objections to this; as a matter of advice, following the precedent carried out in the Congress of the United States, if the gentleman had asked permission to extend his remarks in the Congressional record it would have saved some time, but there was no objections to hearing Mr. Ackerman, and I must object to any interruptions or criticisms.

President: Are there any other remarks upon the question before the house, which is a recommendation for a change in the Constitution? Motion carried.

Mr. Holsinger: Mr. President, I have a little matter here that is a very unpopular matter to touch upon in a Convention like this, but I feel it my duty as the representative of my State, North and South Carolina.

"WHEREAS the United States is considering the revision of the Payne-Aldrich Tariff Bill; be it

"*Resolved*, that this Congress recommend to the National Association to appoint a committee of five whose duty it shall be to get in touch with the Tariff Commission and Congress and see that our interests are properly protected from an excessive tariff or too low a tariff."

Mr. Egan: I second that.

Mr. Ackerman: I wish to go on record for the States comprised within New England Association as being heartily in favor of the resolution.

Mr. Holsinger: I am surprised if there is a gentleman in the room that would be opposed to a resolution like that, when his interest and his bread and butter depends upon it. Our tariff that we pay on photographic lenses, the rate now is 45 per cent. Papers about 33 per cent. I have the entire schedule in my grip, which I can produce if you like. Every other pro-

fession and endeavor are looking after their interests when the tariff is brought up. The manufacturer of photographic apparatus in the United States will go down to Congress, and were down there when that Payne-Aldrich Bill was passed. What are we to do? Stay at home and let a lot of these people dictate prices to us, because the prices on this side of Europe are controlled according to the tariff. The prices on lenses and everything imported are the same on this side as we can buy the imported goods for. If I mistake not, just before the Payne-Aldrich Bill passed the photographic journals boasted that a large amount of the photographic material used anywhere was manufactured in Rochester, and if you remember when you went there those big factories, in all factories but one were imported labor. Now are we to have a bill passed for the protection of these people to the detriment of our self interest?

Mr. Ackerman: The question of the tariff is a very serious question, which, as the preceding member of the Congress has said, is an operation which has interested every field of manufacture of artistic enterprise, and every practical operation of creative effort throughout the world, but it is also true that there has been no representation and tariff investigation before the tariff commission. The tariff committees of Congress are both of photographers and consumers. There have been stenographic reports of meetings held just as this meeting is being held, which shows that when objections were called for upon numerous schedules there was no objections. It seems to me to be proper that this organization should go a little bit further, not so far as to write ten dollars' worth of letters to European manufacturers and photographers asking the price of foreign material, not to write ten dollars' worth of letters to photographic associations asking them just how far they had gone with reference to reciprocal relations between different countries manufacturing photographic products, but it does seem to me that it is right that we should dabble a little bit with the tariff because, as the member who preceded me said, it is a very serious question, and if you can get three or four or five members to act upon this committee, if you can get one member to serve upon this committee without expense, simply that he be given the authority of the Association to compile a little information so that it can be sent to the photographic journals or printed in any publications issued by the organization, a great deal of good will be accomplished in putting the photographic profession upon the same plane as other professions. I am therefore in favor of the resolution.

Mr. Holsinger: That resolution reads to me that the tariff is not made too high or too low. I am not asking for an open market, but we must have fair play, and that is all. The new Tariff Commission throws it open to the public, and you can be heard on this question.

Mr. Harris: The reason these meetings are not successful is that one or two men or three or four men are doing all the talking. Here is a question like the question before, and my answer is the same, that if the gentleman who just finished would take this work upon himself and see that this data is collected, as he suggests some one could, then it will be attended to, because he has enough time to attend to it, but there is not a photographer in this country who has the time to do such a thing. It is all right, and well and good to talk about appointing committees to attend to things. I have appointed a couple of committees, and the men before me have appointed

committees that have never done any work at all. What is the use of going any further along this line unless we know we are going to have some report and some work done? The mere fact that an officer of the Convention appoints a committee of this sort to go to Congress and ask for data, or even to argue before one of the committees up there, it would be silly, and we won't get anything. I am wholly in favor of a proposition of this kind, if we can get the men to go to Washington, know how to proceed, and get some results. We have done that in the Copyright League.

Mr. Holsinger: Why can't we do it in this?

Mr. Harris: We can't get the same kind of work on this until we find a couple of men who will go to work and have the time and money to spend in Washington at a busy time of the year, we will not have any success.

Mr. Snow: I say, let's give them the authority, and then if there is somebody that wants to take up that idea, they have the authority to do so.

Secretary Tyree: I would like this Association to go on record as having a committee appointed to guard our interests in regard to the tariff. I am in favor of it.

Mr. Holsinger: I dislike to take issue with Mr. Harris, but I can't understand why he crosses a bridge before he gets to it. I know there are other capable men in this country who can handle the tariff question just as good as this committee handled the Copyright League, and because a few committees that he has appointed have failed, he should not lose faith in the entire photographic fraternity, but we must remember that there are good men that he could appoint on that committee. Motion carried.

Mr. Leschinsky: I heard some remarks this forenoon in regard to the numerous rates. I think the insurance rates are entirely too high for photographic stock and photographic studios.

President: I would ask you or any other lady or gentleman present to not introduce subjects here unless you are prepared to put it in a concrete form at the present time.

Mr. Ackerman: I move that we now adjourn until nine o'clock tomorrow morning at this room. Motion seconded and carried.

### Fourth Session, July 27

The meeting was called to order at 9.50 A.M.

President: This Congress will come to order. What is your pleasure this morning? Will you have the reading of the minutes of yesterday's session?

With the consent of the meeting, we will dispense with the reading of the minutes.

Mr. Reuvers: There is an article in our Constitution, under the head of appointment of committees which says that the auditing committee shall be members of the annual board. Now we all know in all legislative bodies that the committee is never made of the same people who contracted the debt. Of course it would be an extra expense to have an auditing committee outside of the regular board. I am not casting any reflection, only I just want to bring this up.

President: I will say this, Mr. Roberts. that I believe the parties who audit the books are not the ones who make the debt. The debts are contracted in this Association by the Treasurer and Secretary, and I am sure that it is the first and second vice-presidents who have audited the books, and who have not contracted any part of the debts contained therein.

Mr. Holsinger: Mr. Reuvers called my attention to that matter yesterday.

I don't see anything wrong with it, as the money is paid out according to voucher issued by the Secretary and signed by the President, and then goes to the Treasurer, and is paid out, and all this committee has to do is to check over these books and vouchers. They are not allowed to pay out a cent except by voucher, and it would be a great expense to have an auditing committee travel over the country to audit the books.

President: I will say further that the entire proceedings are published; they were last year, and they will be again this year, in detail.

Mr. Harris: Mr. President, I think that is the answer. I remember as I went on as secretary we started that, and if there is anything which is not proper, that is the time to call attention to it. Everyone of us ought to go over that report, that published list, and see that there is not anything that we don't like in it.

Mr. Ackerman: I desire at this time to reintroduce a resolution introduced by myself at the last meeting, with several amendments, which I shall make in it, and will hand it to the Secretary in a few minutes.

President: While we are waiting, is there anything else to come before the meeting?

Mr. Holloway: I have got something that has been worrying me for some time, and I would like to see how it strikes the opinion of the Congress. Possibly we could not do anything, and possibly we could accomplish much by it. I would like to have this Congress recommend, and also recommend to the manufacturers who exhibit prints, and the photographers who send in pictures, and also the executive board, which hangs these pictures, that we make our exhibit of pictures as few as possible, and as select as possible. I would like to go still further and call your attention to that exhibit of pictures that the Eastman people have produced. I don't doubt but what every picture in that exhibit is a fine piece of work, but I will venture to say that there has not been one man here that can remember ten of those pictures in that exhibit, because there are so many. I would like to have this Congress request these dealers to exhibit not over 20 pictures, and that they exhibit all the best things that they can find and hang them so that we can look at one without having the others glaring at us all around. I believe we would get more out of it than 20,000 of the others all jumbled up together, because there are so many that we do not see anything. Then I would like to go further and request that the photographers sending in pictures only send one, and then we can hang them in a line, and we can see them all nicely. And then I would like also to include in that the request to the executive board that they will see that there is only one picture from a photographer, and that they will also see that that one picture is hung and lighted as it ought to be, instead of having them all around here. I just like to look at good pictures, but there are so many I don't know where to begin and where to leave off. In doing that you get the best that a man makes, and then if some little fellow sends in his one picture and it is not good, we can hang it, and the ones that are not so good, off at one side, and then as we go on we can see only the masterpieces, and then when we go home we will remember every picture in the hall. Now, for instance, if that lady was sitting here the other side of eight or ten other ladies, she would not get my attention to her, because there were so many others sitting around her, and it is the same with the pictures. Our attention is drawn to pictures where

they are more separated from one another, than when they are packed close together. Why could not we recommend that? The reason that the manufacturers send so many pictures, of course, is that they want to jolly up the photographers over the country who use their goods. If a photographer comes here and looks around and don't see one of his pictures here, he feels a little hurt. The men who have the rest of the pictures, may put them in an album where they may be seen, if they wish.

Mr. Larrimer remarked in a joking way the other day, that the duties of the First Vice-President, were to hang up about 3,000,000 pictures where you had only space for 200. There is a good deal of truth to that. Don't you think, now, that that would be a wise matter to take up and suggest to these different interests, and especially to our incoming executive board? I make that only as a suggestion, because I believe when we go away from the next convention we should remember all the pictures that we see in the hall.

Mr. Ackerman: I move you, sir, that this recommendation, which is incorporated already in the record, be referred to the incoming executive committee for their consideration. Seconded.

Mr. Spellman: I have been impressed just as Mr. Holloway has by the tremendous lot of pictures, and have wished many times since I came into the hall that some of you fellows would have time to pick out some of the good ones so that I could get a look at them, because I came here late and have to leave early, and have not the time to look through all the exhibit. I would like to add one request that the best location in the convention hall be given to the members' exhibit. You come into this hall and find that the members' exhibit is in the poorest place in the hall to see. The poorest light is on them, and our members' exhibit is a poor showing, whereas the manufacturers' exhibits have a better location. I think that the request should be added to it that the best part of the hall should be given to the members' exhibit.

Secretary: The manufacturers down on the lower floor are paying $50 for every 10 feet of space that they use. The Eastman Kodak Company took what looked to me like the worst space in the house, but they spent something like $50 to fix up lights, and you see the results. You have cut the Secretary's salary now, and if you take away the amount of space that he is going to sell, he will get a very small haul.

Mr. Spellman: The question is, are we running this convention for the dealers or for the photographers?

Secretary: We are running it for the good of the P. A. of A. Look at the amount of money we get out of the manufacturers.

Mr. Spellman: But if we are going to hurt the Association by doing as we are at the present time, we should not do it. We should either have the lights arranged; we can spend the money for that. Let's have a place to exhibit our pictures. Let's do something. I used to belong to the old Ohio Association years ago, and one thing we did there—and we used to have what was called a "Salon." Of course it brought in there the matter of judgment. At that convention we fixed up in the middle of our hall down there an exhibit room, and put cheesecloth over the top, or did something to get the light just right, and the artists selected the pictures to put in there; you could go in there and see them without being pulled and hauled by a mixture of everything else. As Mr. Holloway says, we can see one

alone, better than a lot of them. If we had our pictures all in one room it would be good.

Mr. Holsinger: I feel that we are handicapping the executive board. They know what expense there is to carry on a successful convention, and it is necessary to sell a certain amount of space in order to obtain the necessary funds to run the Association, and they should have the necessary leeway to do so. I move that this matter be referred to the executive board.

President: There is a previous motion to refer. I declare debate closed on this question, as the question has been called for. Motion carried.

Mr. Ackerman: I now ask for a consideration of my resolution.

President: We recognize Mr. Ackerman. Have you your resolution ready to read?

Secretary (reading):

"*Amendment to the Constitution and By-Laws P. A. of A., Providing for the Appointment of a New Standing Committee*

"As a practical recognition of the services rendered the P. A. of A. by our distinguished fellow workers from Germany, bringing to us still greater evidence of the existence of an international fraternity among photographic people and a cordial relationship between the earnest workers of all nations;

"*Be it Resolved*, That the Photographers' Association of America, in convention assembled, does hereby create a new standing committee to be known as the Commission of Foreign Affairs.

"2. This Commission shall consist of three active or associate members to be appointed forthwith by the chair, the first appointed member to hold office for three years; the second, two years; and the third, one year. Thereafter one member shall be appointed by each succeeding president for the full three-year period, so that there shall at all times be experienced members of the commission in office.

"3. The duties of the commission shall be to correspond with photographic organizations and people all over the world with a view to the betterment of the members of the Association, to establish reciprocal relations between photographic interests everywhere, to furnish an annual detailed report, and to furnish a digest of the report.

"4. The Commission shall serve without compensation but shall be reimbursed for such incidental expenses as are incurred for stationery and postage, and the Treasurer is hereby authorized to pay such vouchers after proper audit, providing, however, that such expenditures shall not exceed the sum of ten dollars per annum.

"5. All portions of the Constitution and By-Laws of the Association in conflict with these provisions are hereby repealed."

Amendment introduced by Carl E. Ackerman.

Mr. Harris: I move that we accept this. Motion seconded and carried.

FIFTH SESSION, JULY 28

Mr. Ackerman: I desire to re-introduce a resolution:

"It appearing from the record that the original purpose of the publication known as the *Association Annual* having been fulfilled, be it resolved, that its publication be discontinued.

"In lieu thereof the Secretary shall be authorized to issue a quarterly at the expense of the Association to conform with the rules and regulations of

the post-office department and to contain only matter relating to the Association and its work.

"The Secretary shall be authorized to employ editorial assistance should he so desire, but the amount so expended not to exceed $100 per year.

"In style and arrangement the quarterly shall be simple and dignified and the Secretary shall at all times endeavor to keep the expense of the publication within reasonable bounds."

I find, Mr. Chairman, that the law governing the admission of second-class matter in the Post Office (second-class matter being admitted to the mails upon the payment of one cent per pound) provides for the admission of publications issued by educational and scientific bodies. The publication of this quarterly will bring you in closer touch with your members and each other and with the officers than you have ever been before; providing more brains are used in the publication of the Association and less paper. I move you, sir, the passage of the resolution.

Mr. Snow: I second the motion.

President: With unanimous consent I will limit debate to one minute; no member, under any circumstances, shall speak more than once on this subject. Is there any objection?

Mr. Snow: Is it necessary to publish four publications a year in order to get it in the mail?

Mr. Ackerman: It is.

Mr. Leschinsky: I think the Annual was a very good thing. It was a work of art, the last one we had, and instructive to everyone. I don't see why we should make any change. It seems to me this is all out of place, this idea. I am in favor of leaving it the way it is.

Mr. Goldensky: I am in favor of that motion, because it is the best thing this Congress has ever done. The origin of this Annual was due to the fact that the salon was established, I think after the Milwaukee convention, and to honor the salon it was decided at the convention that 25 pictures selected as the salon should be published annually, and they thought that salon was a steady institution. It caused much disagreement and unpleasantness, so that was blocked and the publication was still in existence to the detriment of the society, at our expense, because it was useless truck all the time, from the first time it was printed until today. It has no scientific, no educational matter.

Mr. Doty: I think in the discussion the other day in regard to getting up the Annual, the point was brought out that our officers are of the opinion that it has greatly increased the membership. There are a great many members paying in their dues, I understand, for the sake of getting the Annual, who cannot be in attendance here. I think that point could not be overlooked.

Mr Holsinger: I think it would be a great pity to handicap the Board in this matter, and I move that that matter be referred to them with power to act if they see fit, and if they see fit, to publish this book quarterly, or not, as they wish. Motion seconded.

Motion carried by a standing vote: 20 to 2.

Mr. Ackerman: I desire to introduce another resolution.

"*Resolved*, That it is the sense of the Congress that the publication of a daily be discontinued and that in future the Secretary be authorized to print a small folder setting forth the full program of the Convention and in which there shall be no advertisements."

I move the adoption of this resolution without debate. Motion seconded.

President: My understanding is that this be put on passage without debate. I take it this vote settles the vote on the resolution.

Upon rising vote, motion declared lost.

President: I declare the resolution lost. Has anyone anything to offer?

Mr. Bucklin (Minn.): I represent a question which was referred to the Congress yesterday. I don't represent anyone. The question which was brought up yesterday before the Congress, I was told to hand the matter to you.

President: This is a matter that has been referred to the Congress by the Association, Is this your own resolution?

Mr. Holsinger: Mr. Bucklin is not a member of the Congress, and in order to get that before the house properly I will offer that resolution—not saying that I am in favor of it.

President: We will have the author read this resolution.

Mr. Bucklin: "WHEREAS, the shapes and sizes of our photographic mounts have become so numerous that the public have found no satisfactory means of preserving them.

"The prevailing method of storing them in boxes soon soils and cheapens the appearance of even the best of our work—often below that of the postcard, which has been well preserved in an album made especially for that purpose;

"WHEREAS, the naming of one special size (8 by 11) would standardize our mounts and make it possible for an album or portfolio to be placed upon the market which would preserve our better photographic work not intended for framing;

"WHEREAS, the ease of showing photographs will lead to their being more often seen, thus keeping our craft before the public;

"WHEREAS, ecomony will result in the purchasing of supplies such as tissues, mailers, etc.;

"WHEREAS, the selection of a slightly larger size (8 by 11) than is generally used would elevate the "craft" both from an artistic and financial standpoint,

"*Be it Resolved*, That we hereby recommend that all photographers of the P. A. of A. be urged to accept this (8 by 11) size, as standard album or portfolio size, in place of the old 4¼ by 6½, and that this style be designated as the new album or portfolio style, regardless of size of photograph mounted thereon.

"*Be it further Resolved*, That the photographic supply manufacturers be urged to devise some form of album or portfolio for preservation of photographs mounted on said new size.

GEORGE W. BUCKLIN,
Austin, Minn.

Mem. No. 480, 1911.
Dated: July 28, 1911."

Mr. Harris: As I understand it, Mr. Chairman, the gentleman is presenting this for some English person that he has been in communication with, and it is a question that it does not seem possible to put through with any certainty in this country, and I therefore move you that the resolution be tabled. Seconded and carried.

President: Here is a resolution by Mr. Egan:

"Mr. Chairman: Owing to the fact that in the early history of photography, when the rates of fire insurance were established at that time being classed among the hazardous risks on account of using alcohol, ether, gun cotton, and gasoline burnishers, and therefore today if a studio is located in a building it raises the fire insurance of the entire building; not only that; but if a building is located within 20 feet of the same, it also raises its insurance.

"Nowadays the risks have ceased, but we are still in the same class, and I therefore move you, Mr. Chairman,

that the Secretary of the Association be instructed to communicate with the Board of Underwriters, putting forth the conditions as they now exist in photographic studios, and taking the necessary steps to have our fire insurance rates changed into its proper class."

Mr. Leschinsky: I move the adoption of that resolution. Motion seconded.

Mr. Core: I rise to a point of information. We, in New York, have been investigating this thing, and we found that we have not been able to find anybody who is able to supply us with data so that we can make a comparative analysis of our rates. The rates in the cities are based on localities, and only the man who has been in a locality for a great length of time can be able to really state how much or how little the rates have been reduced, or whether they have been reduced at all or not. Now I think myself that the insurance companies are pretty fairly cognizant of the fact that we do not use any great amount of ether, alcohol, or gun cotton, and yet today we cannot get this. I don't see how we can intelligently go before a board of underwriters and ask them for a reduction of a thing if we don't know whether we have it or not. In New York we tried to get this, and had a committee appointed, and they have been working on it for a month or so in order to find out just exactly how we stood and whether the present rates were the same which were in force during the time of the collodion days. We have not been able to find out.

Mr. Harris: I didn't intend to say anything on this, because I wanted to tell the National Association about the proposition. I have tried for years to get data on the proposition to present to the Association in the form of a lecture, or something of that sort—something on fire insurance. I have even gone so far, or, in fact, he went so far, as to write Mr. Chambers on this proposition, in the meantime, to work it from the newspaper end. We cannot get anyone nationally to present this subject. I tried it among brokers of insurance. I tried it among lawyers. I tried it from the insurance man's point of view, and the man that can get up a good story that will give us any information is a "peach," and it is impossible to do it nationally. I find that we can do it from the State point of view. For instance, the State of Pennsylvania last year, the board got together a lot of data and got a State insurance man of the State to tell us the story, and it was good stuff. I had a long talk with him, after his lecture, asked him if we could not get the same thing nationally, and he said "go to Washington and get Washington officials to give us an insurance division, and then you will have it nationally. But tell them it will be impossible to take it up from the national point of view." The only way you can do it is to go back to your own State and work it from the State point of view. This man said in his remarks that if you want lower insurance there is but one way to do it—divide your insurance so that you will only insure one thing in the policy. He said, give five or six things, and in doing it that way you will soon show your State insurance commission that you don't have anything except in your departments; otherwise you can't do it. You get a blanket insurance policy and cover everything, and that is the reason you don't get lower rates. Stop this blanket proposition, and you will soon show them there is not anything in there to explode, because they then have to run into these different departments to find out about this. I am sorry I have not been able to get

some one to tell you the story on insurance, but I have faced it myself.

Mr. Tennyson (Litchfield, Ill.): Our fire insurance companies tell me that the fire insurance is based entirely upon the amount of fires compared to the number of policies. I presented this thing to them and asked them for information. They gave me the fire insurance companies' data for it. Whether it is true or not I am unable to say.

Mr. Harris: My firm saved last year $60 on our insurance, by dividing the policy, and I have told all our boys in our city to do the same thing. One other man saved a little over a hundred by dividing the policy. By dividing the policy you have the benefit of a lower rate.

Mr. Egan: I wanted to say that I did this on the suggestion of Mr. Hill of Minneapolis, who was a member of the underwriters, and he says that if the associations all over the country embodied with the National Association would take this up with underwriters, he thought an adjustment could be made, because, he said, in the few recent years, the risks of this kind have ceased, and if it would make any difference I should think it would be well to take it up State by State.

Mr. Spellman: I have had quite an experience with fire insurance, and I personally want to state that I do not think it would do any good at all. I have had the question up time and time again. Have had two fires, and at the present time am carrying $10,000 on my studio, so I am carrying pretty good insurance, and they will give me the best rate of insurance; the premiums have got to pay the losses, and they will not write insurance below where the premium will pay the loss and pay a profit. In the city of Detroit 500 photograph galleries I don't think carry anything like the insurance that stores in other lines would carry. They tell me that I get the same rates as the lawyer gets, and the same rate as the doctor gets, or in any other line. Our stuff is perishable. A little fire in a photographer's studio, a little water thrown in there, and your backgrounds are gone, and your furniture gone, your card stock is gone, and that is the reason that your rates are high. The only way to figure against that is, as I think Mr. Harris suggested, to divide the policies. My policies are all divided. I get as low a rate as 0.55, less 0.30, and I pay $1.15 on part of it; I don't think you can do anything that way unless you increase the quantity of insurance. The thing is figured on that basis, and they are governed by the State laws, and connot do any different, and we cannot do any different. Another reason why photographers' studios are high is that usually they are on top of the building. Each floor adds on to the rate. It does not make any difference what the rate. Each tenant in the building adds to the rate. So that if you can get into a building by yourself, and take the first floor, you will get a lower rate than on the tenth floor and in a building occupied by 100 other tenants.

Mr. Reuvers: I move that we table the resolution. Motion seconded and carried.

Mr. Harris: Why not suggest to the next president that he look into the insurance matter and try and get some others interested in it. I move you that the suggestion be offered to the next president of our Association to try and find some way of giving us a paper or lecture on insurance matters. Give a lecture at the next session of the Photographers' Association of America.

Mr. Egan: I second that motion. Carried.

Mr. Leschinsky: That matter about the per capita tax; has that been settled yet, or is it to come up?

President: It has not been settled. No, sir.

Mr Leschinsky: I heard that there was something to come before the body?

Mr. Harris: We haven't time to thresh that out.

President: It has been suggested that the next Congress get an expression of all the State societies, regardless of whether they are affiliated or not, as to what they believe would be the best method.

Mr. Harris: I think it would be a good plan for every State officer here to take this matter back with him. It will be printed in some form, and why not take it back to your State society and get your president to put it on your State program, and then they will bring it up, and the man who comes here as a delegate next year will know, if you thresh it out in your State convention, exactly what the majority of the members think about it. I think it would be a very good subject for the State program, and then next year when you come, see how many resolutions you can have on this thing. If we have 40 or 60 resolutions, it will be an awfully interesting proposition to read all those resolutions on it. I will promise you that I will do my part with my State association, and I know Mr. Goldensky, from the same association, will do his part.

Mr. Hardin: As a matter of information, I would like to know if arrangements have been made, or if any of the photographic editors have information about publishing the proceedings of this Congress. The reason I ask this is that last year I found it difficult to get a copy of the proceedings of this Congress at Milwaukee so that I might make a good report to my State association. President Harris finally sent me a copy, which was in one of the regular journals. I did not happen to be a subscriber to it.

President: I will just answer that in saying that galley proofs of the proceedings of this Congress will be furnished to all the photographic journals.

President: Is there any more business to come before this Congress?

Mr. Harris: All the photographic papers get copies of our proceedings. Every one of them, but they sometimes print so far ahead that it is stale news all the time. That is the trouble, the news get old before they are able to print and publish it. Take, for instance, the *Era*, which is always in press two months ahead.

Mr. Snow: There is where your little quarterly would come in very nicely, in the whole business, and you could file it.

Mr. Spellman: This is only a suggestion, and I have no motion to offer It seems to me that after a number of years it would be an awfully good thing if our annual could be a complete report of our Convention, and contain a reproduction of a selection of pictures at this Convention. I don't know whether it would be practicable and could be issued after the Convention rather than ahead of the Convention, or not. Of course by next year this stuff will be stale. I wonder if that could be done.

Mr. Harris: It seems to me I may be wrong all the time, but I can't help it, as this question has come up. This should fall on the Board, that knows all its troubles. Talking about this Annual. That Annual don't suit, but what are you going to do? They have said we must get out an Annual. You passed a resolution about seven years ago that we must get out an Annual every year. We have to put something

in that Annual. I work like a dog to get a good picture to put in the Annual, I wrote 50 people before I got enough good pictures to put in there. Of course I don't get what some people think are the best photographers in this country, but why take the best photographers every time; let us pick out the best we can that has not been published and give the other fellow a chance. As for the contents of this Annual, there is one article in the Annual this year that in my opinion is better than any article that was ever published as news for the photographer, and that article is, whether you own a negative, and whether you can make prints off it or not, and all should read that article by Mr. Kennedy (?), a lawyer of New York, who has had lots to do with copyrights. He has given us this article in plain language and style easily understood, and mentions case after case so that if you get into trouble and give this article to your lawyer he can look through it and find all these cases without any trouble.

What I would like to see done, Mr. Chairman, is that all these boys go back home and get a concensus of the opinion of the State officers and members, to see how we can make this Annual a good thing. As far as the proceedings of this meeting are concerned, they do not read them. They say, What do I want to know about that meeting of last year, I want to see it next year. I would like to see the minutes published also, but it is a big thing. The boys will not pay two dollars for that book, like they are doing now; they may not come to this Convention if you publish stuff like that in it. Keep these pictures in it. For instance, I asked the Treasurer this morning how many books were sent to people who were not there. He said he had received an armful since he has been here. That means that he has a number, at least. Consequently, I would like to see all of you go back and see if you cannot find some ideas in your State and let us see if we cannot build up this Annual into better shape and form than it is now. The officers will be tickled to death for any suggestions any State may have to offer. That is what the Congress is for—to get these ideas in so that we can make this a clearing house to help the old ship along.

Mr. Spellman: My idea was to issue an Annual just as quickly as possible, following the Convention, rather than before. Now we don't get that Annual long enough ahead of the Convention and it is no good on our program as a matter of fact; I haven't got one; I was informed by the Treasurer that he was all out of them, and consequently I cannot read the arguments. My thought was that I would pay my money just as quick if I could not come to this Convention if I was going to get a report of this Convention within a few weeks. I believe the advertisers would pay as much for the advertising a month after as before. I don't know whether it is possible to do this. If he gets it a day or two before he goes away it would be all right. This is my thought on the matter.

Mr. Holloway: I believe that what Mr. Spellman is driving at is something whereby we can have a full and complete report of the minutes of the Association. There was a time when the New England Association bid fair to be a rival of the National Association. One of the greatest things they ever did when they were in their prime was to issue a complete report of the proceedings of the New England Convention, gotten up in a very small book, very fine print, no embellishments whatever, just a complete report of the proceedings of the New England

Convention. It was gotten out within a month or two afterward and mailed to all the members. It seems to me that this is what we want, as members of the Congress, and then we can take this complete report and get what we want to out of it to give to our State organizations. This should be done independent of the Annual, gotten out and mailed to every member. I don't mean to have any advertisements in it at all. I believe all the members of this Association are entitled to that. It would not be, however, a very difficult matter, because all we would have to do would be to turn the stenographer's reports over to the printer and have him print that booklet and send it to all the members. That would meet the requirements of those who have missed some of these proceedings here. Those who pay their dues and cannot get here would like to know what has been done. When they buy it either weekly or monthly they get the installments. I would like to see this Association, the incoming executive board do this, and I will move that the executive board of the Photographers' Association of America issue a complete report of the preceedings of this Convention and the Congress, and mail it to all the members who have paid their dues for this year; I refer to the present executive board. The executive board do not retire until the first of January; I say the first executive board—turn the stenographer's report over to the printer and have them gotten out in a concise form and mailed to all of us.

President: You do not mean that this Congress has power to instruct them; you mean that you are going to recommend this to come before the Association meeting, that the Congress recommend that the Association instruct the executive board to issue a complete account of the proceedings of this meeting as soon as possible after the close of the Convention.

Mr. Holloway: I would like to make that within a month.

Mr. Harris: I object to putting that question. Do you mean that we are to only publish this Congress' report?

Mr. Holloway: I might answer that, Mr. Chairman. I meant to publish a complete report of the proceedings of the Photographers' Association of America, of this Convention at St. Paul, and also a complete report of the proceedings of the Congress.

Mr. Harris: I have not any idea how much that will cost, but I will bet you it will cost a hundred dollars. What is the use of spending a hundred dollars when the magazines publish it. Now, surely, every member of this Association will take one of these magazines.

Mr. Holloway: I remember that when I retired from the executive board, of course I was one of the favored few. I had a copy of the proceedings, and I have that copy of this stenographer's report today, and it affords me great pleasure to go back even today, and look over the proceedings of that Convention, and if we had this little report we could file it away and it would always be a pleasure to us to look it over. I believe it is due to those who do not come to have a complete report. Then as to the expense, I don't blame Mr. Harris for objecting to that, because I objected to every dollar or hundred dollars expense that he proposed, but I believe this reaches the majority of the photographers and does good, and they all like to have it, and I would like to see you vote intelligently upon this. Motion carried by a rising vote.

President: Gentlemen, as I stated at the beginning of this Convention, we would close at 10.30. I wish to thank you very much for your atten-

tion, and your courtesy to the chairman. A motion to adjourn this Congress until the next session of the P. A. of A. will be in order.

Mr. Reuvers: I move you that we express a hearty vote of thanks to our Chairman for his kindly treatment of the members of this Congress. Carried unanimously.

President: I will say that I have absolutely tried to do as much business in the limited time we have had and the very limited amount of organization we possess at the present time, and I have tried to be absolutely impartial, and I thank you for your expression of appreciation.

A motion to adjourn this Congress until the next session of the P. A. of A. will be in order.

Mr. Spellman: I move that this Congress adjourn until the next session of the P. A. of A. Seconded and carried.

President: We stand adjourned.

## TRADE NOTES

THE TAYLOR-HOBSON CO., makers of the well-known Cooke lens, advise us that the negative which won for Mr. S. H. Lifshey the $500 prize, offered by the Eastman Kodak Co. for the best work by a professional photographer, was made with a Cooke portrait lens, Series VI, of thirteen-inch focus. The achievement is more noteworthy when it is remembered that Mr. Lifshey and his Cooke lens were competing in Class A, restricted to former prize winners. In this class not only must "the man behind the gun" be a top-notcher, but he must be equipped with the best kind of "gun" obtainable.

THE INGENTO RAPID PRINTER, Style B. just put on the market by BURKE & JAMES, INC., is one of those handy shop tools that is doing so much to save the photographer's time and improve the mechanical quality of his output. The machine is a compact arrangement of paper storage drawers, printing bed and frame, and an adjustable electric light holder. The exposures are made by simply pressing down the negative holder until an autocatch on the end of the frame locks in position, at which instant the printing light is switched on and burns until the exposure is completed. A pressure of the thumb releases the catch, turns off the light, and raises the frame into a position allowing the printed paper to be withdrawn and a fresh piece inserted. As a retouching frame, the negative holder is supported at a proper angle, and retouching can be done by either daylight or electric light. It also makes a convenient holder for prints that require spotting. Another useful feature is for drying prints quickly. This is done by placing a blotter on the felt bed, then a print and another blotter, and bringing down the printing frame, which acts as a squeegee, insuring rapid, flat drying. The price for the machine complete, with flexible wire and plug, is $7.50. It is a piece of apparatus that will be useful in any photographic workroom.

AMONG the finest examples of the printer's art that come to our desk are the catalogues issued by the BAUSCH & LOMB OPTICAL COMPANY. Their latest issue is *Projection Apparatus*, being a detailed description of their Balopticons and accessories. The ever-increasing uses for projection apparatus have led the Bausch & Lomb Company to evolve the most extended and scientifically efficient line at present on the market at home or abroad. The catalogue in question devotes several pages to the scientific and popular descriptions of the various forms of projections, with many diagrams and tables. Opaque projection, one of the most recent developments and most attractive forms of optical projection, is fully described. The professional photographer has not yet realized the many uses of the projection lantern in the increasing of his business. A study of this catalogue will help him to a better understanding. The Bausch & Lomb Company, of Rochester, N. Y., will be glad to mail a copy on request.

THE MULTISPEED SHUTTER CO., of New York, has just issued a new catalogue listing its various types of shutters. The illustrations, of a remarkable nature, are reproductions of work done by this between-the-lens shutter. A copy can be had by writing the Company at 317 East Thirty-fourth Street, New York.

THE EASTMAN KODAK CO., like Oliver Twist, is always seeking more—more room to grow, more land on which to build. Their latest acquisition is a tract of land adjoining Kodak Park, on which additional factories will be built, in which it is expected employment will be found for some three thousand five hundred additional employees.

# WILSON'S PHOTOGRAPHIC MAGAZINE

A MONTHLY MAGAZINE FOR PRACTICAL PHOTOGRAPHERS

Founded in 1864 by EDWARD L. WILSON
MRS. EDWARD L. WILSON, Publisher and Proprietor
L. WINIFRED WILSON AND T. DIXON TENNANT, Editors

EDWARD L. WILSON, 122 EAST TWENTY-FIFTH STREET, NEW YORK
*Entered at New York Post-office as Second-class Matter*

**Yearly subscription in advance, United States and Mexico, $3.00; Canada, $3.25; Foreign Countries, $3.50. Single copies, 25 cents. Subscriptions begin with current issue unless otherwise ordered. Original manuscripts on photographic subjects are solicited, and, if accepted, will be paid for on publication.**

## EDITORS' TABLE.

IT is with special pleasure that we congratulate Mr. S. F. Lifshey on being awarded the first prize of five hundred dollars, in Class A, of the Eastman Kodak Competition of 1911. This is a special class created this year, and is confined to previous winners in these competitions, and it is gratifying to have its first award made to a New Yorker. Mr. Lifshey, a well-known contributor to these pages, has shown a consistently steady advance in artistic photography, and today stands in the front ranks of our best workers. When his winning print is published it will be seen that he has created a strikingly beautiful picture, one of the best examples of genre photography we have seen in many years, and in every way worthy of the generous prize offered by the Eastman Kodak Co.

The many friends of Mr. and Mrs. Lifshey will be sorry to hear of the serious illness of Mrs. Lifshey, who was stricken with typhoid fever a few days ago. As Mr. Lifshey remarked in a letter to us, "Every rose has its thorn." We hope for her speedy recovery.

---

THE ASSOCIATED PHOTOGRAPHERS OF WEST VIRGINIA held their first meeting October 10 and 11, at Grafton, and those who were there refer to it as the most enthusiastic and instructive meeting of the year. A program was prepared by President Proctor, consisting of lecture by Harry Fell, lecture and criticism of pictures by G. W. Harris, of Washington, D. C.; also demonstrations under skylight by Dudley Hoyt, Will H. Towles, of Washington, and by J. C. Dorrello, of Cramer Dry Plate Co. Each day Eastman Kodak Co. and Ansco Co., gave demonstrations of their papers. The program was carried out to the letter, and each man who took part did his best and was highly praised and appreciated by every one attending. The membership was nearly doubled this year from what it was at the meeting of the organization last year at Parkersburg. Wheeling was chosen as the next place of meeting.

The following officers were elected: President, J. E. Giffen, Wheeling; Vice-President, S. E. Friend, Morgantown; Secretary, Friend Cochrane, Charleston; Treasurer, W. R. Loar, Grafton.

WE want to congratulate Editor F. J. Mortimer on the special autumn number of *The Amateur Photographer and Photographic News*. It is an unusually interesting number, strong in illustrations. The pictures reproduced in full page, six by nine size, are selected from works hung at the recent London Salon of Photography, and include pictures by Mrs. Kasebier, Mrs. G. A. Burton, Bertram Park, C. Yarnall Abbott, Rudolph Dührkoop, and F. J. Mortimer. In all, some eighty pages of pictures, reading matter, and advertisements, at a cost of two pence, or four cents—a wonderful achievement.

WITH the busiest season of the year in full swing, many a photographer will be wishing that the days were twenty-four hours long and that he had four hands instead of two. While it is now too late to stop and think of some of the many time and labor-saving devices you might have adopted before the rush started, it will pay you well to make a mental, or rather a pen-and-paper note of the things that strike you as taking up an unusual amount of your busy time, and, when the rush is over, see what can be done in the way of improving and increasing your workroom efficiency, ready for the next busy time.

WE have been asked why we are devoting so much space to the doings of the Congress of Photography, held at St. Paul during the summer. We are printing the report in full as received from the official stenographer. The Congress of Photography was founded in the hope that it would discuss and put into shape for presentation before the National Convention all important matters that required more mature and careful consideration than they were likely to get from a busy and already overloaded convention. A careful reading of the report of the Third Congress will show just how little progress is being made and how great a need there is of a much better understanding of parliamentary usage and procedure. Fully 75 per cent. of the time was taken up by delegates talking on questions that had been ruled out of order. The Chairman was seldom able to get it clear into the minds of the Congress just when one question ended and another began. There was so much talk and so little progress.

MARGARET ELIZABETH RICHARDSON
Granddaughter of the late Edward L. Wilson

By George Steckel, Los Angeles, California

# WILSON'S PHOTOGRAPHIC MAGAZINE

FOUNDED IN 1864 BY EDWARD L. WILSON

VOL. XLVIII DECEMBER, 1911 No. 660

## THE PROGRESS MEDAL OF THE ROYAL PHOTOGRAPHIC SOCIETY OF GREAT BRITAIN

SEVERAL attempts have been made in this country within the last few years to recognize inventive genius in the photographic field. Prizes of one hundred and fifty dollars have been awarded by the National Association and by the Professional Photographers' Society of New York respectively for what might be called cute little workroom helps, such as flashlight cabinets, cement sinks, electric skylights, focussing attachments, etc.

We would like to see a medal awarded somewhat on the lines of the Progress Medal of the Royal Photographic Society. It should be of bronze or silver, and of slight intrinsic value, but rich in honor for the recipient. We have plenty of workers who have devoted years of work and study to some one thing for the advancement of photography. Such men as Alfred Steiglitz, who has worked so long and successfully for the recognition of photography; R. D. Gray, for his wide-angle lens; Gustave Dietz, for his multispeed shutter; Folmer and Schwing, for their Graflex cameras; F. E. Ives, for his system of color photography. These are just a few names that occur to us at the moment. There are many others worthy of recognition.

The following is a list of those who have been honored by the Royal Photographic Society since 1878. It makes a complete and condensed history of the advance of photography for the last thirty-three years:

1878. Captain W. de W. Abney. For his scientific work in the advance of photography.

1881. W. Willis. For the platinotype process.

1882. L. Warnerke. For general progress and his discoveries in photography: Actinometry, sensitometry, instantaneous shutter, gelatine emulsions, etc.

1883. W. B. Woodbury. For the Stannotype process.

1884. Dr. J. M. Eder. For his work respecting gelatine chloride emulsions.

1890. Captain W. de W. Abney. For his continued work, experiments, and investigations in photography.

1891. Colonel J. Waterhouse. For his original and continuous researches in relation to orthochromatic photography; the successful elaboration of a process of photographic etching; and the direct production of reversed images by the use of thio-carbamides in the developer.

1895. Dr. P. H. Emerson. For his work in the advance of artistic photography.

1896. Thomas R. Dallmeyer. For the telephotographic lens.

1897. Professor Gabriel Lippmann. For his discovery of the process of producing photographs in natural colors by the interference method.

1898. Hurter and Driffield. For their work in the determination of the speed of plates.

1900. Louis Ducos du Hauron. For having initiated three-color heliochromy as a working process.

1901. Dr. R. L. Maddox. As the inventor of the gelatinobromide of silver emulsion dry plate process.

1902. Joseph Wilson Swan. For his services to photography in connection with the carbon or pigment process and its applications.

1903. Frederic Eugene Ives. For his work in three-color photography.

1905. Dr. Paul Rudolph. For his researches in photographic optics.

1906. Dr. P. J. C. Janssen. For his eminent services to photography, especially in its application to solar and spectroscopic investigation.

1907. E. Sanger Shepherd. For his researches and inventions in three-color photography.

1908. John Sterry. For his photometrical investigations, and especially for his researches and writings on sensitometry and on the action of chemical substances upon the latent image.

1909. A. Lumière et ses Fils. For the autochrome process of color photography and for their photochemical researches.

1910. Alfred Watkins. For his work on exposure and development.

## PROFESSIONAL PHOTOGRAPHY IN ENGLAND

In an interview Langfier, the famous Brook Street society photographer, has been good enough to favor Wilson's Photographic Magazine with his views upon certain matters appertaining to the business of the professional photographer in Great Britain today. Mr. Langfier, in the first place, expressed himself as being no believer at all in what is termed individual "style." Every sitter nowadays, he says, has an idea that some particular style as regards pose or costume becomes them better than any other; but, as a matter of fact, very few persons indeed have any definite idea at all upon the subject. To be sure, every successful portrait must possess a style of its own in order to be so; but here it rests with the photographer and not with the sitter at all to realize this, and woe betide his reputation for artistic perception if he be so weak as to allow the average sitter, male or female, to have the final say here. It may be stated as a general axiom that every client who enters the studio of any important London photographer desires theoretically to have a true presentment of themselves. It is their ideas, in fact, on such points which err. For example, whereas, in the days of Watteau and Gainsborough the costume and surroundings all lent their special aid to the composition of a picture, the same cannot be said for our time, when the result of such an attempt would be disastrous failure. Your modern photographer, knowing this, aims at no such an impossibility. What he strives for is a picture sharp and clear in all its details; artistic, also, so far as that can be; a live piece of portraiture, in fact, and not a replica of some imaginative painting. His is the onus in these prosaic days of exerting all his artistic and photographic skill in order to make up for the lack of harmonious dress and accessories which graced the times gone by. He does, of course, sometimes copy, and very finely, the ideas in portraiture originally evolved by the old masters; but this is most usually when the client specially desires a picture in fancy dress, and even then endless trouble must be taken in order to ensure that everything about the picture is chronologically quite correct. The present day trend of photography is, as has been said, to have the picture as nearly "alike" as the artist can make it. He is right, too, in the result; for it is no adver-

tisement for his studio when he has beautified a picture by retouching to the complete satisfaction of the fair sitter to have her friends, to whom she shows the result, remark to her: "How beautiful! And who is it?" It is in such cases that the client also is apt to realize very unpleasanty the mistake she made in giving instructions at all to the expert portrait-taker.

However, Mr. Langfier, from his long experience of the business, has found out the real truth for himself. It is, namely, that everybody has in reality an individual style of their own, and, as stated above, it is for the operator who poses the sitter to discover, by that peculiar intuition which he must possess naturally, what is the individual style in every case. Some people, of course, look best in profile, others three-quarter face; then there is characteristic "expression" to be considered, and finally general pose and background effects. And here it may be remarked that Mr. Langfier's studio, while among the most popular in town, is also among the barest that we have entered. No accessories of any kind is the rule. His photographs almost invariably consist (as he himself wittily puts it) of "a background, a sitter, and a chair." Now as regards background, that entirely depends in particular cases upon the dress. But to generalize, it may be said that if the sitter is a lady the background to the picture should invariably be light; if a gentleman, dark. Because, while in the former case the sitter may have come directly from the establishment of one of the most fashionable "coiffeurs," wearing a dress cut in fashion's latest style, in the other case it is only a question of obtaining a faithful presentment of the face alone.

In the case of child photography, Mr. Langfier, like all experienced artists, believes in a natural style. "Take the children in their own element," says he, and the maxim holds good nine times out of ten. He admits to having sometimes attempted to "pose" a baby sitter whom he possibly thought a little forward for its years; but more often than not in such cases, after he had spent an infinity of pains in obtaining a correct pose and expression, and had turned his back to do the picture, he would find to his dismay that the youngster had got down and was playing peep-bo with him between the camera's legs. There is no prettier method for children up to a certain age than to "take" them with little bare shoulders and head, vignetted; otherwise the best plan, if a good picture is wanted, is to let them play about, and "snap" them at the psychological moment when they are not expecting it.

With regard to advertising, Mr. Langfier's opinion, deliberately given, is that the best advertisement of a photographer is his own work. In Great Britain the periodical *Courts*, at Buckingham Palace, with the accompanying necessity for photographing fair debutantes and their chaperons, means a good deal of grist to the mill of the artist fortunate enough to secure these orders; but the bulk of these come to the few, and it is doubtful if any are secured through the medium of the advertising columns of the daily or even illustrated press. On the other hand, these same functions entail an infinity of trouble on the photographer, who has to individualize as far as possible each sitter—hampered as he is by the tremendous train at her feet and plumes and feathers above her head.

On the subject of apparatus Mr. Langfier had not much to say. Just as in battle it is the man behind the gun rather than the weapon itself who has to be thanked for the victory

or defeat, so in photography it is the man underneath the velvet cloth and not the camera or particular lens employed which makes or mars the ultimate result.

Touching on advertising, there is a very large number of so-called high-class photographers who unfortunately have hurt the prosperity of the business by issuing unlimited "invitations" to persons eminent in the world of society, letters, or sport, to pose for them gratuitously. Mr. Langfier is strongly and righteously opposed to this prevalence of "complimentary" portrait-taking. His dictum is that the photographer should endeavor by all the means in his power to make his art a necessity to sitters and not *vice versa*, as this taking of pictures for nothing would tend to make it.

In the course of his remarks Langfier touched in passing on his success in photographing Royalty, who always make excellent sitters, and by their tact and consideration enable the photographer to get his very best results.

## UTOCOLOR: COLOR PHOTOGRAPHY ON PAPER

[UTOCOLOR, the invention of Dr. J. H. Smith, is the latest attempt at the solution of color photography. It is a print-out paper reproducing the colors of an autochrome, Dufay dioptichrome, or any colored transparency, by simply printing in sunlight and fixing in two solutions. A supply forwarded to us is now in the New York Custom House. We will report upon it in our next issue. Meanwhile the following notes by "Roving Commissioner," in the *Photographic Dealer*, will be found most interesting.—EDS. W. P. M.]

THE ambition of the photographer to obtain photographs in natural colors has existed for years, and when the famous house of Lumière introduced the beautiful autochrome process that ambition was partly realized. I say partly, because no sooner were the exquisite results seen on glass transparencies than the desire to have these effects transferred to paper became almost universal.

Many years ago I remember chatting with Mr. B. J. Edwards, the inventor of the plate-coating machine, and we discussed the possibility of ever obtaining photographs in natural colors. At the time Mr. Edwards had just introduced his orthochromatic plates, and the marked improvement in the reproduction of flowers and foliage by the employment of these plates had then been demonstrated to me. Mr. Edwards said he did not see any insuperable difficulty in the way of getting a glass positive in colors, but, he added, "How are you going to make paper prints from such a positive?"

This was a long time ago, and much advance has been made in all branches of photography since that interview took place. We have several brands of orthochromatic and panchromatic plates for rendering color values; a number of competing systems in photographic processes which produce natural-color positives on glass, and a variety of pigment processes for obtaining colored photographs on other materials; but, so far as my own knowledge goes, it has been left to one inventor to produce a print-out paper which will, by simply printing in the frame, reproduce colored positives in their original colors.

I refer to Dr. J. H. Smith, who has displayed a wonderful persistency in his efforts to give the photographer a paper which will yield satisfactory photographs in color. A few years ago Dr. Smith gave me some samples of his early attempts, and with an exposure of some hours in sunshine I was able to reproduce the red coat of a soldier and his blue trousers from a hand-painted lantern slide, and this was about all I could do. Dr. Smith has steadily worked away at his process in the face of tremendous odds, and today he is the fortunate inventor of a patented process which is as much an advance upon his earlier attempts as the autochrome process is upon all its predecessors.

This new process is to be known as "Utocolor." A company has been formed in Paris, with a capital of 500,000 francs, and arrangements are now being made for supplying the British and other markets with Dr. Smith's latest invention, a print-out paper which will reproduce the colors of an autochrome or any colored transparency by simply printing in sunlight and fixing in two specially prepared fixing solutions.

I recently received a sample packet of "Utocolor" paper and two bottles of the fixing solutions, and immediately set to work to test this new process for obtaining colored photographs on paper. My first exposures were of hand-colored lantern slides, and my interest was tremendously increased when, after two hours' exposure in the printing frames, I found I had obtained presentable copies on the paper of the colors in the original positives.

These were duly washed and fixed, according to the printed instructions, and I next made some attempts with autochromes. The density of the autorome with its three-colored screen d not look very promising, but into the frames they went, and the black-looking "Utocolor" paper was placed on the coated side of the plate in the usual way. The frames were exposed for three hours in sunlight, and the results were excellent, in fact, far better than my early attempts with the autochrome plate. I began to realize that color photography on paper was now an accomplished fact.

Armed with my results, I met the inventor, Dr. Smith, on his arrival from Paris, and was pleased to hear him say that I was getting the colors all right, although better results were to be obtained by the judicious use of the two light filters which are issued with the process. These filters compensate for the variations in the quality of daylight, and also serve to absorb the ultra-violet rays, which are injurious to the process.

Dr. Smith then showed me a number of albums full of beautiful colored prints on "Utocolor," which I admit were considerably in advance of most of my results. But I have received another batch of "Utocolor" paper which has an improved emulsion, just introduced by the inventor, and with this new paper and the aid of the light filters I have succeeded in obtaining some beautiful results from my stock of autochromes. Many of the prints are quite good reproductions of the original positives, and the process is charmingly simple as well as extremely fascinating.

The introduction of "Utocolor" is a new impetus to photography generally, and my readers will see in it a splendid opportunity for bringing new customers to their establishments. The process should give new life to all the systems of color photography which enable the photographer to secure a transparent positive, seeing that it provides a means of duplicating the results on paper.

The tyro in color work can obtain results with "Utocolor" which will afford him immense pleasure, and at the same time there is scope in the process for the skill of the most advanced worker.

No doubt further advances will be made, and some of them will in all probability be the outcome of experiments made by the amateur with the present "Utocolor" process. In order that my readers may have particulars of the working of "Utocolor" before them, I append the working instructions which are issued with the paper.

*Utocolor (Dr. J. H. Smith's Process), Patented in England, U. S. A., and Other Countries.*—Color P. O. P. for the manifold reproduction of autochrome and other color-screen plates, as well as of transparent colored objects of every kind, *e. g.*, window transparencies, glacier prints, glass paintings, colored lantern slides, etc.

### *Instructions*

*Keeping.*—Utocolor paper must be kept in a dry place and not exposed to great heat; if possible it should be preserved in our original packing. Under these conditions the paper keeps well for twelve months at least.

*Printing Subjects.*—Although color-screen positives, as autochrome, omnicolor, dioptichrome, and Thames-color plates, also N. P. G. screen films, are the most important subjects for printing, a large number of other subjects are available, such as three-color glass and film positives, hand-colored lantern slides, transparent paper and glass paintings, window transparencies, glacier prints, colored plans and drawings of architects and engineers upon tracing paper (highly colored pictures, lithographs, etc., upon ordinary paper, if not too thick, may be rendered transparent by rubbing in with oil at the back and then printed from). Pressed flowers and leaves, butterflies, and other highly colored objects which are easily pressed flat upon glass may also be printed from with advantage upon "Utocolor paper."

*Printing from Color-screen Plates (Autochrome, Omnicolor, Dioptichrome, Thames-color Plates, etc.).*—Color-screen plates must be exposed and treated according to the instructions of the respective manufacturers. All colored pictures having a proportion of gray mixed with their colors are naturally less brilliant in color when viewed by reflected light (upon paper, etc.) than when viewed as transparencies. On this account positives with strong and brilliant colors are more suitable to print from than those with soft and delicate color tints, as the paper prints always lose some of the color intensity of the original.

The plates should not exhibit too great contrasts of light and shade; otherwise, as in ordinary black and white photography, the lighter parts of the plate will be printed out long before the darker portions are sufficiently printed. It is well on this account to take the precaution, before exposing the plate, of having the subject of the photograph as evenly illuminated as possible.

*Retouching the Color Plate.*—The gray screen in the color plate has always the tendency to reduce the brilliancy of the colors; it is on this account of advantage in many cases to increase the brilliancy of the positive by retouching the colors, and this is especially the case with large monotone color areas (*e. g.*, blue sky). This retouching corresponds exactly to the retouching in ordinary black and white photography, only in this case it refers almost exclusively to increasing the intensity of individual color areas.

This retouching may easily be done

by any amateur. As the colors are already given by the plate, it is only necessary to brush over the parts of the plate where the colors are too weak in the corresponding tone until sufficiently deep in color. We supply suitable dye solutions which are specially selected for this purpose and cannot be replaced by other colors. These dye solutions may be mixed together in various proportions in order to obtain intermediate shades of color. The dyes should be applied with a fine sable brush to the thoroughly dried emulsion surface of the plate before the plate is varnished.

*Varnishing the Plate.*—After the plate (with the retouching dye, if this has been applied) has become *thoroughly* dry, it is varnished with our special "Utocolor" varnish. This is poured slowly over the plate until the whole surface is covered and drained off at one of the corners. It is very essential that the varnish should dry rapidly, otherwise it will absorb moisture from the air, and, penetrating the emulsion film, destroy the screen dyes. In winter and in damp weather the danger of this happening is greatest, and it is necessary at such times to dry the varnished plates in a warm room or before a fire or stove. On the other hand, too much heat must be avoided, because in the case of the autochrome plate the screen film would melt and a black and white positive result. It is better, also, to take the precaution of warming the plate slightly, in order to get rid of the last traces of moisture before applying the varnish.

It is necessary to state that our "Utocolor" varnish must be exclusively used for this purpose, as the ordinary varnishes used for these plates soften when printing in the sun and adhere to the surface of the "Utocolor" paper. In case the plate has already been varnished with one of these commercial varnishes, it must be placed for five or ten minutes in ordinary benzol to remove the varnish, and then, after thoroughly drying, our "Utocolor" varnish must be applied as described above.

*Printing from the Positives.*—In general the printing process with "Utocolor" paper is the same as that of all ordinary daylight printing-out papers. The plate is laid in the printing frame film side up as usual, and the "Utocolor" paper is laid upon it with the black sensitive surface downward; the printing frame is then closed and placed out in daylight. The printing should be done in strong daylight; for a normal positive it requires about two hours in sunlight, or correspondingly longer in diffused light. The best results are obtained under white clouds—unfortunately this kind of illumination seldom lasts long enough. Very good results are obtained when the printing is commenced in good diffused light and continued for several hours, then finished in sunlight for about one hour.

In printing in strong sunlight there is great danger of the plate becoming overheated and the colors being destroyed, a black-and-white positive resulting. The printing must therefore be carefully looked after and the plate not exposed longer than a quarter of an hour at a time to mid-summer sun. In order to absorb the heat rays, it is well to use a printing frame with a sheet of plate glass 10 to 15 millimeters thick. This thick plate glass serves also the purpose of absorbing largely the injurious ultra-violet rays of the sun. When the plate has become too hot, the printing frame should be placed in the shade to cool down, and this may be hastened by the application of a wet sponge or such like device.

We shall shortly place upon the market special printing frames having 15 millimeters thick plate-glass sheets

and a convenient arrangement above the frame for inserting the light filters about to be described. A second patented printing frame will also be placed upon the market, enabling finished prints to be obtained in about one-quarter the time otherwise required in the sun.

In damp weather, or if the paper has been kept in a damp place, it is advisable to warm the sensitive paper over a gas flame or fire before placing it on the positive, otherwise the paper may stick to the plate during printing and tear away a portion of the surface when taking the print off. If the surface of the plate feels damp or sticky, it is well to warm the positive also before printing in damp weather. As a further precaution, a thin celluloid film may be inserted between the surface of the plate and the paper.

*Light Filters for Printing.*—In order to compensate for the variations in the quality of daylight, light filters must be used and adjusted to the character of the light employed for printing. We are placing on the market two different light filters for this purpose, marked G. and M. G. Both of these filters serve to absorb the injurious ultra-violet rays, and are employed as follows: G., when printing under strong diffused light, or in weak sunlight; M. G., in strong sunlight.

In very strong sunlight, and especially in southern climates it may be necessary to employ both G. and M. G. simultaneously. The mat glass in the M. G. filter serves to diffuse the sun's rays.

In very weak light it is not necessary to use a light filter. It is not advisable however, to print in such light, or if it cannot be avoided, then it is preferable at least to wait for sunlight in order to finish the printing under the corresponding filter.

The filters are placed above the printing frame, so that the light must pass first through them before reaching the plate and the paper.

The adjustment of the filters depends, as already stated, upon circumstances; it is impossible to give instructions for each individual case; after a little practice one will soon learn to judge the quality of the light and the most suitable filter to use.

The prints must be examined from time to time, and as a general indication it may be mentioned that, should the print exhibit a reddish tinge, it is a sign that the green filter employed is too weak; should the print show, however, a green tinge, it is a sign that the filter employed is too strong. In the same way plates which exhibit a reddish or greenish shade may be corrected while printing.

The print is finished when it corresponds to the original plate. In case the contrast between light and shade has been too great, it stands to reason that the reproduction of one part of the picture will suffer, just as in ordinary black-and-white photography, the light parts of the subject being finished before the dark parts have been printed through. In this case the lighter parts may be masked at the finish; but it is better, if possible, to avoid too great contrasts by providing an even illumination for the subject when it is being photographed.

*Fixing the Prints.*—This fixing process is absolutely different from that employed in black-and-white photography, and on no account may the ordinary fixing baths be used for the purpose in question. We are placing on the market two fixing baths for our "Utocolor" paper, called "Utocolor" fixing bath A and B, to be used as follows:

The prints are first washed for five minutes in three changes of water, then laid in "Utocolor" fixing bath A

for fifteen minutes, the dish being rocked all the time. The prints are then well rinsed for three minutes and laid in "Utocolor" fixing bath B for seven minutes, with constant shaking of the dish as before. Then the prints are rinsed for a few seconds under the tap, but not washed again, and finally hung up to dry.

For quarter-plate 50 c.c. of each bath is sufficient, for half-plate 100 c.c., and for whole plate 200 c.c. It is preferable to throw away the fixing bath after using once, or it may be used at most twice over in immediate succession.

"Utocolor" paper may be rendered glossy by squeegeeing on to glass or ferrotype plates, just as any other gelatine paper, and it may be retouched with the usual colors employed for other gelatine photographs.

*Keeping the Prints.*—The fixing is good, but not quite perfect; still the prints may be placed in a room if only weakly illuminated for a long time without suffering, and in albums they may be kept for an unlimited time. It is an advantage to mount the prints upon black or dark-colored cardboard.

*Failures.*—Should failures occur in spite of these detailed instructions, we shall be pleased to give advice to our customers if they will kindly send us the prints in question and the positives for comparison.

Dr. Smith has been visiting the important centres of Great Britain, explaining the process and showing the results which may be obtained with it, and I am convinced there will be a big demand for "Utocolor," which dealers must take care they participate in. All applications for information and supplies should be addressed to Société Anonyme "Utocolor," La Garenne-Colombes, Paris. (Postage, five cents.)

## METRIC WEIGHTS AND MEASURES

AMERICANS who have visited Europe and struggled with the foreign systems of currency come home with an increased respect for our own decimal system, and yet, although the advantages of a decimal system of weights and measures over our present system or rather lack of system, are as great as are those of our decimal of currency over the English system; with the exception of those who are more immediately engaged in scientific pursuits, we, as a people, continue to ignore all the efforts that have been made for its adoption—to substitute simplicity for complication, good for bad.

No doubt the long array of names from the, to most of us, unfamiliar Greek and Latin given to the divisions and multiples of the meter and gram look formidable enough to have had much to do with our disinclination to look into the matter; but with this, as with most other matters, the mystery lies on the surface, and with a little study disappears like morning mist before the sunshine. In point of fact, of the thirty-nine different names on a table before me as I write, not more than one-third are in general use in France, Germany only employs nine, and for most ordinary purposes half of even that number is sufficient, while instead of the, *per se*, meaningless *bushel*, *peck*, *feet* etc., each name conveys a clear idea of its relation to the unit.

Men engaged in scientific pursuits find in the metric system an ease and facility in their own work and ready means of keeping in touch with their fellows all over the world; and equally so would the photographer find it, if he could be brought to realize its simplicity and efficiency for all his formulæ, or wherever proportions or calculation come into play.

And, to begin with, he need not burden himself with many names; half a dozen will answer all his purposes. Those are:

| | |
|---|---|
| Weight | Gram,<br>Kilogram = 1000 grams. |
| Measure | Cubic centimeter,<br>Liter = 1000 c.c. |
| Length | Centimeter = 10 millimeters.<br>Millimeter. |

With a few metrical weights, and one or two measures graduated according to the metrical system, which any stock-house could or should supply, he will be able by simply moving a point or adding a cipher or a figure, to prepare any quantity of any formula.

Most of the photographic formulæ that come in the foreign journals are simply expressed in cubic centimeters (c.c.) and grams, and as the c.c. and the gram are practically identical, such formulæ may be read as if writing "parts," bearing in mind that whereas each gram and c.c. represent 1, each kilo and liter is 1000.

As a practical illustration of the simplicity of the system, there is a lens on my table now, of which I am requested to give approximately the available working aperture. It is a single lens, and so I focus on the most distant available object, and measure the distance between the back and the focussing screen, which is 23 centimeters. A little examination shows that the largest stop with which the proper size of plate is well covered is 15 millimeters. A cipher added to the 23 centimeters converts it into 230 millimeters, which divided by 15, the size of the stop, gives at once F/12 as the available working aperture, and that in less than half the time it takes to write it.

## GET IT IN THE PRINT. THE QUINTESSENCE OF PORTRAITURE

ONE of our prominent photographers, noted for his terseness, in an advertisement in a daily paper, used for the headline "The Quintessence of Portraiture is Intimacy." We are inclined to think that the quintessence of a portrait or anything else photographic is permanency. It is all very well to shout, "Secure the substance ere the shadow flee;" but what if the print fades before the shadow is ready to fly?

The following tribute to platinum is from a recent number of *The Photo-Miniature:*

Not very long ago an enterprising advertiser, selling ever so many volumes of photographic instruction on the easy-payment plan, blistered the public prints with the alluring catchword, "Get it in the negative." The admonition was well considered and to the point—but sadly incomplete. Let me add the perfect word: *Get it in the print.* For, when all is said and done, the negative is only a means to the end, necessary, but intermediate, preliminary. The first intention, and the last end in all our photography, is the print. Read it again, this most significant of photographic facts. The thing aimed at, the real purpose of all we do in photography, is the print—

the literal or pictorial record of what the eye saw. So, consider the subject ever so carefully, its composition and its illumination; get it in the negative by correct exposure and artful or automatic development, as you prefer; and then be very sure to get it all in the print, especially the more subtle parts of the subject which convey its sentiment or character to the eye and mind of the beholder.

I am impelled to emphasize this here by the conviction that far too many of our prints are not doing justice to our subjects or our negatives. Within the last few months, there have passed through my hands hundreds of prints sent by amateur and professional photographers in friendly competition. So far as the subjects and their treatment were concerned, these hundreds of prints were extremely interesting, but, considered as prints, the only word which properly described them was the disagreeable word, unsatisfactory. To be sure, there were good prints here and there, but they were lost in the endless procession of weak, flat, foggy, harsh, contrasty, hard, commonplace, and indifferent prints by which they were surrounded on every side. I was appalled, not dreaming that so low a standard of quality in photographic prints could be widespread at this late day. And yet they came from all parts of America, and from workers in widely different classes, animated by the single desire to send of their best. It is evident that a large number of today's workers in photography either do not know or have forgotten the qualities which differentiate photographic prints as good, bad, and indifferent. And it is equally obvious that the standard of quality in photographic printing in America needs a mighty uplift. This, then, is the uplift: A book on platinum printing.

### *Expert Opinion*

Why platinum printing? Go into the leading portrait studios of any large city and ask what printing-paper they employ for the highest grade work. The answer will be, platinum paper. Go to any one of the famous pictorialists whose exhibition prints excite your envious admiration, and ask him what paper he uses in obtaining the superb qualities which make his prints so desirable. The reply, in most cases, will be, platinum paper. Go to the great reproduction firms which supply the wonderful copies of paintings and works of art bought by our libraries and print collectors, and ask them what printing papers they employ. The answer will be, silver, carbon, and platinum, the last named being used for the best grade of small reproductions. Here we have the opinion of experts admittedly well qualified to judge as to the qualities desired in the best sort of photographic prints. Why do they all prefer platinum? The answer is not far to seek. In all photography there is nothing more beautiful, or more everlastingly permanent, or more completely satisfying to the cultivated eye, than the platinum print. Add to this that platinum printing is one of the simplest and most direct of all methods of photographic printing, and the opinion of our experts has a vital interest to every intelligent photographer, amateur or professional. It also explains why platinum printing is chosen as the subject of this, our uplift number.

### *Beauty*

What is a platinum print? Simply a photographic print in which the picture image is composed of metallic platinum on a base of the purest of paper. The beauty of the platinum

print arises from the fact that the distribution of metallic platinum throughout the image in an exceedingly fine state of division yields exquisitely graduated tones of black and gray or sepia, according to the variety of paper used, with a delicacy and richness of effect which cannot be equalled in any other sort of print. Further, the picture image is formed on the paper itself, rather than on a gelatine or other emulsion base, or on a clay-coated paper, as is the case with many other kinds of prints, so that we get whatever desirable quality of surface and texture the paper base may possess. The advantages of this latter feature will be best appreciated by a comparison of several platinum prints from the same negative made on different varieties of paper, such as smooth bond, medium-rough drawing paper, water-color paper, vellum, and Japan tissues. To the platinum worker who prepares his own papers such comparisons are a source of endless pleasure and profit, the differences in effect so obtainable being unbelievable save by actual test.

### *Permanence*

The permanence of the platinum print results from the fact that the picture image, being composed of metallic platinum held in or on the purest of paper, is indestructible and uninfluenced by the innumerable causes which may and do produce change and deterioration in prints made by all other photographic printing methods, with the single exception of pigment or carbon prints.

### *Simplicity of Method*

The simplicity and directness of platinum printing is apparent from a brief statement of the essential manipulations. The sensitized paper is exposed to daylight under a negative in a printing-frame, requiring about one-half the exposure time needed by print-out paper; it is then immersed in a solution of oxalate of potash, the development of the picture image being completed in from three or four seconds to as many minutes, after which the print is passed through four baths of very dilute muriatic acid and washed for twenty minutes in running water. In practice, with half a dozen negatives and as many printing-frames, the developing and clearing solutions being ready at hand, a dozen prints can be made in thirty minutes or less.

But you must see a really good platinum print, such as Eastman's Etching Black or Etching Sepia, before you can appreciate wherein it differs in beauty and quality from other kinds of prints. You must try the process for yourself in order to realize its simplicity. And you must take my word for the absolute permanency of the platinum print, unless you care to put a print up where the sun and rain can beat on it for twenty years or so while you make personal observations of the result of the test.

## THE CHOICE OF A COLOR SCREEN

THE selection of a suitable color screen or light filter is one of the first things to be done on taking up orthochromatic photography. On looking through one of the comprehensive price lists issued by the big photographic dealers, it will be found that there is quite a large choice, both of qualities

(if one may judge by the price) and of depth of color or intensity. Which of these is to be selected will depend upon the nature of the work to be done and the sum that the photographer is prepared to spend upon a screen.

The screens on the market consist either of glass or of some gelatin or collodion film, which may or may not be protected by being cemented between glass. The glass screens are usually cheap, are not easily damaged, and are not likely to change or fade. It is generally urged against them that they are "inefficient." That is to say that, in addition to reducing or cutting off the light which we want them to cut off, they also cut off some of the light which we de not want cut off; so that, in order to get some particular degree of color correction, a glass screen requires a longer exposure than would be necessary with the best screen of dyed film; or, to put it the other way, of two screens both increasing the exposure to the same extent, the dyed film screen would give a more complete color correction than the glass screen. This objection is well founded.

How far such a thing can be regarded as important will depend upon circumstances. For ordinary work with time exposures the difference between screens of glass and of dyed film is not a very important one, as a rule. It only means that, instead of an exposure of four seconds being required, let us say, we have to give one or six or eight seconds—a difference which, for large classes of work, is negligible. For example, all work for which the ordinary and not the extra-rapid orthochromatic plates are used, may be done as well with a glass as with a dyed film screen.

The use of a color screen and orthochromatic plates in a hand camera is in another category. Here rapidity is of great importance. In order that the exposures may be short enough for the camera to be held in the hand, nothing that tends to make them longer without any corresponding benefit is permissible. We can no longer afford to sacrifice any of the light reaching the plate unless there is a direct gain in orthochromatism, or the exposures may be so long that hand camera work is no longer practicable. A glass screen even of a very pale character is, therefore, not to be chosen for orthochromatic hand-camera work, however suitable it may be for other purposes.

Turning to film filters, we find that there are at least three grades of them: There is the plain piece of dyed film, sometimes given away, at others supplied for a few pence; then there is the film cemented between "selected" glass, which costs a very few shillings; and, finally, there is the film cemented between "optical flats," costing several times as much as the former.

The unmounted film if used with care will be found to answer all ordinary purposes, and is an excellent form of light filter for any amateur to get who is thinking of taking up orthochromatic work but is not quite decided on the point. It will show him the gain he will get in the rendering of color at a very trifling outlay. If he decides in favor of the change he is almost sure to buy a cemented filter, which, as a permanent instrument, is much cheaper than the film itself, since the latter is very easily damaged with finger marks, etc.

The best way to use the film is to put it between two pieces of very thin card, and to cut through all three with a pair of scissors, so that they are made of a circular shape which exactly fits inside the hood of the lens. The cards are only used to protect the film from handling. A ring of card is then made by curling up a flat strip and gumming it, the ring also fitting inside the lens

hood. By coiling the card round several times it can be made more substantial than with a single thickness. This ring, which should not be more than a quarter of an inch deep, is next painted over with dead black, and then, when quite dry, a little seccotine is run round its edge, which is then pressed down upon the circular filter and allowed to dry. In slipping the filter mounted in this way into the lens, care must be used to see that it does not touch the convex surface of the glass. It may be necessary to slip a little cardboard ring into the hood first, to prevent the filter being pushed in too far so as to touch the glass.

Such films, however, are sure to be regarded only as a temporary expedient, and anyone taking up orthochromatic work as a general thing is pretty certain to get a color screen properly mounted up between glass. There is no real need to get "optical flats" for the ordinary work of photography; although if their expense is not a serious matter, the enthusiast will probably prefer to get the best tools he can. Still, the ordinary glass screens will be found all that is necessary for ordinary work, although in high power telephotography, and with extremely rapid high-class lenses, working, say, at $f/3$, or $f/4$, it may be necessary, or at least advantageous, to use the "optical flats." For hand camera work with lenses working at $f/6$ or thereabouts, and for telephotography with moderate amplifications, such as are the most generally attempted by the amateur, the ordinary cemented screens will be found to work without the slightest perceptible falling off in the definition.

It is only in this matter of very fine definition that any difference between "optical flats" and ordinary cemented screens would ever be likely to be found, as in other respects, of course, the screens will be found to be alike, at least so long as they are from the same maker.

The depth of screen selected must depend on the nature of the work to be done. It is a mistake to choose for general work too deep a screen, with the idea of getting as much orthochromatism as possible. It is not to be assumed that the most perfect color rendering is always desirable. It may not be, even in picture copying, where an absolutely faithful reproduction in monochrome, by eliminating color contrast, may give a far less faithful rendering of the painter's work; it certainly is not in landscape, where it has the effect of getting rid of much of the aërial perspective, which is such a desirable quality in the picture.

There are occasions when the most perfect color rendering that can possibly be got is wanted, and then a panchromatic plate and a deep screen adjusted to it must be used; but for the all-round work of the amateur, a much lighter screen than this is to be preferred, even when it is not a necessity, as it is for hand camera photography.

As far as orthochromatic rendering is concerned, it is much better to use a comparatively light filter, and to make sure that the full increase of exposure which it requires can be given, than to use a deeper one, and at times to be unable to give all the increase it entails.

It is generally recognized now that even a very slight degree of underexposure when working with orthochromatic plates and a light filter leads to the loss of much of the benefit we might expect to derive from the combination.

The four-times screen is quite deep enough for all the ordinary work of the amateur, and when orthochromatic work of an all-round character is to be done this is, on the whole, the best that

can be got. For hand camera work, an even paler light filter is to be preferred, or the increased exposure may be prohibitive in just those cases where an improvement in the color rendering is most to be desired. When the great majority of the work is to be done on ordinary plates without a light filter, the orthochromatic plate and color screen only being employed in very special cases, not at least for outdoor work at all, it may, perhaps, be better to get a deeper screen.

The screens that are most frequently used by photographers range from four to ten times, anything beyond ten times being used only for exceptional work. There may not be any very perceptible difference in tint between a four and a ten times screen, as the screen with different makes of orthochromatic plates may itself vary at least to this extent. No doubt there is a certain similarity in the color sensitiveness of most of the non-red sensitive plates on the market, which points to the use of the same dyes by different makers; but there certainly are some which, if not nominally panchromatic, are sufficiently different to call for much less increase than some of the other brands do.

Over-correction, especially in landscape work, is quite as great a fault as under-correction; and before the screening has been carried so far as to give an approximately correct color rendering, it may have been carried too far to give the more distant parts of the picture with that suggestion of distance which is such a valuable help in picture-making. Of course, if the object of the photographer is to get rid of all haze in the distance, and to show objects miles away as distinctly as possible—more distinctly than they appear to the eye—then a very deep screen is a most useful tool, but light greens in the foreground, such as grass and the like, will then be rendered as white or almost white, and the general effect will be an unnatural one.

One is sometimes advised to get a color screen that has been adjusted to the particular brand of orthochromatic plate that is in use. On the other hand, we are told by some authorities that all the usual varieties of orthochromatic plates (other than panchromatic) are practically alike, are color-sensitised with the same dyes, and the same color screens can be used with all.

Both statements may be said to have a foundation in fact. Where it is very important to keep the exposure short, as in hand camera work, it is certainly best to get a color screen from one of the recognized makers, properly adjusted to the particular plates that are to be used. But where this is not the case, where it is not of vital importance whether the particular screen used is a "four-times" or a "six-times" screen, then the adjustment of screen to plate is not material; one screen may be obtained, and used with any of the orthochromatic plates on the market. The results will not be found to be perceptibly different with different makes of plate, the only variation being in the extent of the increase in exposure which the screen entails.

Enough has been written to give the amateur some guide as to the selection of a color screen; but before leaving the subject altogether it is well to insist upon the importance of finding out for oneself, by actual trial, the extent of the increase in exposure which the screen that is chosen requires, when used with the plates with which it is to be generally employed. The best way of doing this is to expose a series of plates on the same subject, both with and without the screen. If it is nominally a "four-times" screen, exposures may be given two, four, six, and eight times as long as the correct exposure without the screen. All these plates must be developed simultaneously, in

the same dish and for the same time, if the test is to be of any value; and the plate without a screen, with which the screened plates are to be compared, must itself be correctly exposed. The negatives should all be printed, and the prints carefully compared to judge of the exposures. Any attempt to judge from the negatives alone is certain to be misleading.

It is a curious thing, and one for which it is not easy to account, that the increased exposures required by commercial color screens are almost always much under-stated by the makers. There is no suggestion here of deliberate misrepresentation, of course, but the fact remains, and is borne out by the experience of most of the most skilful orthochromatic workers, that they find that the exposure indicated by the makers of the screens is almost invariably much less than proves to be required in practice.—THOS. KINGHAM in *Photography and Focus*.

## THE PRIZE WINNERS: KODAK ADVERTISING COMPETITION OF 1911

THE judges for the 1911 competition for the Kodak advertising prizes were J. H. Garo, Dudley Hoyt, Curtis P. Brady, of *McClure's Magazine*, Geo. H. Fowler, of Colgate & Co.'s advertising department, and Clarence D. Newell, of Frank Seaman, Inc., advertising agency.

The work of the judges in our 1911 Kodak Advertising Competition has been completed, and we take pleasure in announcing the following awards:

GRAND PRIZE: S. H. Lifshey, Brooklyn, N. Y.

CLASS A: First, Mrs. Mary L. Taylor, Indianapolis, Ind. Second, D. Van de Venter, Winona Lake, Ind. Third, A. E. Riley, Coshocton, Ohio. Fourth, H. W. Gallichan, Gravenhurst, Ont. Fifth, J. B. Hostetler, Davenport, Iowa.

CLASS B: First, Mrs. G. Wintemberg, East Cleveland, Ohio. Second, James L. Baldwin, Auburn, N. Y. Third, Harry F. Blanchard, South Glens Falls, N. Y. Fourth, H. Krebs, Wayne, Pa. Fifth, Miss E. Zeckwer, Philadelphia, Pa.

As usual, there were many pictures of a high order of merit, and as usual the prizes were won by pictures that told the tale of the witchery of Kodakery in a simple way.

We thank all those who participated in this contest for their interest in it. The non-prize winning pictures will be returned in a few weeks, just as soon as we can go through them again and carefully select such additional pictures as we desire to purchase.

During the winter we shall, as usual, issue a portfolio of prize-winning pictures, a copy of which will be mailed to each of the participants in this contest.

Class A is a new class instituted this year, and is confined to former prize winners. It removes any handicap that the beginner might have felt that he was laboring under in competing with experienced workers who had shown their ability by taking prizes in earlier contests.

It will be observed that while the ladies have only secured three of the eleven prizes awarded, two of the three were first prizes, so what they lacked in quantity seems to have been amply made up in quality.

Geographically the prizes seem to run in couples, Indiana, Ohio, and Pennsylvania each capturing two prizes. New York landed three, and Iowa and Ontario, Canada, one each.

MARGARET ELIZABETH RICHARDSON
Granddaughter of the late Edward L Wilson

By George Steckel, Los Angeles, California

MARGARET ELIZABETH RICHARDSON
Granddaughter of the late Edward L. Wilson

By George Steckel, Los Angeles, California

MARGARET ELIZABETH RICHARDSON
Granddaughter of the late Edward L. Wilson

By George Steckel, Los Angeles, California

MARGARET ELIZABETH RICHARDSON
Granddaughter of the late Edward L. Wilson

By George Steckel, Los Angeles, California

MARGARET ELIZABETH RICHARDSON
Granddaughter of the late Edward L. Wilson

By George Steckel, Los Angeles, California

By Erickson Studio, Erie, Pa.

*Illustrating Sidney Allan's Article*

By ERICKSON STUDIO, Erie, Pa

*Illustrating Sidney Allan's Article*

By Erickson Studio, Erie, Pa.

*Illustrating Sidney Allan's Article*

# THE PHOTOGRAPHER IN A SMALL TOWN

BY SIDNEY ALLAN

THERE are twenty-two photographic studios in Erie, Pa. The town has about 66,000 inhabitants. This means that there is a possible *clientele* of three thousand to every studio, or the same chance that a photographer would have in a village of three thousand inhabitants.

How many persons have themselves photographed? Surely a small percentage. And even if the unforeseen should occur and three thousand people should patronize one studio, it would not amount to more than eight or nine sittings a day, and at the usual rate of two or three dollars per dozen (as the majority charges), yield an income of six or nine thousand dollars respectively in gross receipts.

But business arithmetics are not as easy as all that. First of all, nobody, in Erie at least, has eight sittings a day. Eight a week with the most successful ones comes nearer the mark. The rent is high, thirty to fifty dollars in the main street, and the competition to beat each other in cheapness of price a most deplorable one. Only three or four aspire to rates of four dollars up and stick to the price. Most of them have different prices for different customers, which is a bad policy. There are two places open all night, and there is one studio which distributes tickets at the matinees of one of the moving picture houses, tickets that entitle the holder to one free photograph. A dismal way of doing business. Of course, business is business. The principal thing is often to get people into your place, and the same scheme, with slight modifications, has been successfully handled by photographers in large cities. There is really little difference between the Moffett method of inviting people to a free sitting by letter and the Erie method of handing tickets to the frequenters of "nicks." For in a town like Erie amusements are scarce, and almost everybody patronizes the moving picture shows. There are at least eighteen of them, and well attended, most of them. So the tickets reach all classes of society. Let us say that one hundred people (surely a low estimate) visit this particular nickelodeon on an afternoon. Well, that means the distribution of 36,500 tickets per year. One-half of the population can get itself portrayed free of charge. It is absurd. It demoralizes the public and cheapens the profession, particularly in a small town. If the public has lost its respect for a profession, and knows that its services can be had for almost any price, it surely will not patronize the better class of work. That they are fooled and induced by trick devices to pay perhaps more before they are through does not help the matter. The harm is done, and the customer is more disgusted than ever.

What chance has a photographer who wants to do clean, good work at, say, six dollars up in such a community? A very slim one. People will not readily see the difference between his superior work and that of others. Of course, he wants to appeal to the better class. But is there one available for his intentions and purposes? Erie is one of the oldest towns in the State, and has for its size quite a large class of well-to-do residents. There are at least a dozen mansions that look like

millionaires' homes, and 10 per cent. of the population—a larger percentage than in most places—enjoy an annual income of ten to twenty thousand or more. These people, however, are the last to patronize a local photographer. They travel and go to the leading photographers of the larger towns. Besides, Buffalo by train is only two to three hours from Erie, and Cleveland even nearer. One can easily go there by automobile, and everybody seems to own one. The residents of the old-fashioned homes, families that have lived for generations in the lake region, have not yet awakened to the luxury of thirty-five dollars a dozen, or anything like that. And there are comparatively few chances among the rest of the population. Erie is a manufacturing town, and wages are very low. The Germans and Poles, which make up the largest part of the population, are sentimental enough to appreciate portrait photography, but a cheap picture will satisfy them as well as a more expensive one. The middle class rarely furnishes a lucrative patronage to the photographer. They might prefer artistic things, but they have no money to indulge, and rarely make a habit of having themselves frequently photographed. There is only one real hotel in town, half empty most of the time, and consequently there is no transient trade. Also the suburbs fail to increase the business. Even the smallest village has its own photographer.

For a long time Evans has occupied the premier position. He is an exponent of the old pictorial school which the Knaffl Brothers have made famous. He is well established, but it took him seven years to do so. Several other men—Lowe, for instance—do good work at cheap prices. And now John Erickson has invaded the field. He has opened a real studio, the largest and best equipped in town. He does work far above the average—simple, straightforward portraiture; but will he be able to hold out? It will take a long time before he is recognized. People are very slow here in such matters. He wants to charge six dollars up. Will he be able to convince the public that his services are worth so much? I wonder what induced him to leave his profitable business in McKeesport and come up here into this cold, inhospitable atmosphere? But there is no gainsaying Erie has a first-class photographer just now. I do not fancy particularly the way he mounts his prints, but the work itself is good. The finish is excellent, and that is to me one of the principal attributes. There must be something substantial about a print; it must not look flimsy and cheap. He does not claim to be an artist, and would hardly endorse a Hutchinson or a Kasebier. He dislikes sensationalism, and is of the opinion that many of the photographers go too far in pictorial effects. Simple poses and backgrounds is what he prefers. He simply wants to make a good reliable portrait, and he succeeds in doing it. The portrait of the old, white-bearded gentleman (Fig. 7) is particularly good. It is a likeness and ordinary good photography. Fig. 2 shows how he can handle detail. Fig. 1 is a trifle awkward. The profile could have been spaced to better advantage. Figs. 3, 4, and 5 are well posed; the facial expression and attitude are natural. The same can be said of the child, Fig. 6. I think it would please the mother.

During my stay in Erie to deliver a course of lectures he also made my portrait. It did not take him long to make a good one. He exposed three plates. Once I moved, the others

turned out well. One I used for advertising purposes. There are other portraits of myself I like better. It lacks subtlety of expression, but it is a portrait that nobody who has met me could look at without immediately recognizing me. Even the newsboys knew me on the street. This is the best recommendation I can give to a photographer of the type of Erickson. And that quality should also appeal to the public.

I have told this story of the photographic situation in Erie largely because I think it will interest photographers in general. The city photographers have no idea how difficult it is to make even a local reputation in a small place, and the photographers of other towns—and the conditions in many are no doubt similar to these of Erie—will sympathize with the struggles of a good photographer like John Erickson.

## THE CAUSE OF REVERSAL AND ITS REMEDY, WITH SOME NOTES ON THE PHOTOGRAPHIC PROCESS*

MOST of our members interested in the scientific side of photography are aware that for the last five or six years Mr. William Hay Caldwell has been engaged in photochemical investigations in connection with the photographic process, and it has been my privilege to follow some of his lines of thought and to see the results of his labors, especially bearing on the subject of reversal of the photographic image.

Some time ago I endeavored to get Mr. Caldwell to read a paper here, but his work was still in progress and he did not feel disposed to do so. Seeing the results he had obtained at the end of last year, and recognizing their very great importance to everyone interested in photography, I succeeded in getting his permission to describe to you some of the results obtained.

In order to obtain a perfect negative upon an ordinary photographic plate, it is necessary that the exposure should be approximately correct within decidedly narrow limits, overexposure resulting in a very flat image; still further exposure causing the reversal of the first effect of the action of light.

When light acts upon certain salts of silver, for example, the halogen salts, it is generally accepted that a subsalt of silver is produced, with the formation of a free substance, such as chlorine, bromide, or iodine in the case of a halogen salt; but this action is at once arrested in the absence of an agent which will act as an absorbent of the substance set free. The most active absorbents of chlorine, bromide, or iodine are the so-called developing agents we use in the development of our plates. But Mr. William Hay Caldwell has discovered a very important fact—that most of these agents which are so active as to reduce the silver salts in the dark are quite unable to render the same salts sensitive in the light by acting as halogen absorbents. The reason for this is that in the light and in the presence of halogen acid formed by the halogen set free, the oxidized product of the reaction is itself again reduced, with a second freeing of

*A paper read before the Royal Photographic Society of Great Britain, by E. Sanger Shepherd, F.R.P.S.

halogen, which recombines with the subsalt, to form again a normal salt.

On the other hand, substances which are not so easily oxidized as to be available for developing are not sufficiently active as absorbers of bromine and iodine to enable them to act in such a way as to render sensitive rapid plates or films made with silver bromide or silver iodide.

At present most sensitive photographic material may be divided into two classes, viz.:

1. Those in which the image formed by light is not visible, or only partially so, and require to be subsequently treated with a developer, as, for example, gelatine dry plates and bromide paper.

2. Those in which the image is obtained entirely by the action of light, without the subsequent use of a developer, as, for instance, albumin paper, P. O. P., gelatinochloride, and citrate papers.

Now, it is obvious that if it were possible to find a substance which would act as a really efficient absorbent of the product of the reaction of light on the halogen salt, there would be no necessity for this distinction; for although the gelatine in contact with the particle of silver bromide acts to some extent as an absorbent of the halogen set free, at the same time the halogen acts as an extremely powerful tanning agent, and retards the developer from acting upon the particle to such an extent as to cause what is known as "overexposure," tending to produce a general flatness of all tones, and entirely upsetting the gradation of the negative.

Dry plates and bromide paper as at present upon the market are made by heating a halogen silver salt, emulsified in some vehicle, generally gelatine, the rapidity of the emulsion being determined by the degree of heating and the consequent size of the particles of silver aggregated into chemical contact. With films made from such emulsions the exposure must be so regulated that no more halogen will be set free by the reduction of the silver salt than can be absorbed by the gelatine or other vehicle present, and this is found in all cases to be a very limited amount.

In photographic materials included in the second class, the halogen set free under the action of light is absorbed by an organic salt of silver (as, for example, an acid silver citrate in the vehicle), with formation in this case of citric acid, and the normal halogen salt of silver. It is quite possible that a rapid paper might be made in this second class, but hitherto it has not been found possible, a developer sufficiently active to reduce the subsalt of a silver haloid reducing the organic salt in the dark; and if it be attempted to transform the organic salt previous to development with a soluble haloid salt, it is found that the minute quantity of subsalt formed by the action of light is destroyed in the process, so far as its capacity for subsequent development is concerned.

Even if it were possible to develop only the organic silver salt to form the image, the want of stability of organic compared with haloid silver salts would make the process of little value.

The ideal absorber or sensitizer for which we have all been looking so long must possess the following properties:

1. It should be incapable of reduction in the light after its oxidation by the halogen set free.

2. It should not reduce in the dark the silver salt employed.

3. It should absorb the halogen as rapidly as it is set free by light.

Mr. Caldwell has found all these properties are possessed by some salts or derivatives of hydrazine $NH_2NH_2$ and of hydroxylamine $NH_2OH$. For example, a sensitive surface having the above-mentioned properties can be prepared by using either one of the silver haloids alone, or a mixture of two or more of them in the ordinary way. To the finished emulsion the necessary amount of a suitable salt or compound of hydrazine is added, such as, for example, a neutral salt of hydrazine made with sulphuric acid or with an easily oxidizable acid, such as phosphorous acid $H_3PO_3$.

These salts can be made by adding a solution of the acid to hydrazine hydrate. Since chlorine, bromine, and iodine form a series of silver salts of gradually increasing stability, the compound of hydrazine used in the preparation of the emulsion can be determined by a consideration of such fact. For example, in the case of silver chloride, as the chlorine evolved by the action of light is a gas that is comparatively easily absorbed, many of the compounds of hydrazine or hydroxalamine will be found suitable, for example, methyl hydrazine. With a halogen salt of greater stability, such as silver bromide, a more active compound of hydrazine is desirable than in the case of a chloride, such, for example, as the phosphorous acid salt of hydrazine. The amount of salt used in the preparation of the emulsion is determined by a consideration of the reducing action of the hydrazine, one molecule of hydrazine hydrate being able to reduce four molecules of silver haloid.

With some of the first plates made with emulsion containing hydrazine I exposed a series of plates in the Hurter and Driffield rotating sector instrument. This instrument gives a series of nine exposures in geometrical progression, and I found that a total exposure of 640 candle meter seconds gave me a negative which, with ordinary development, plotted to a correct straight line through these nine steps. Now, if it is true that hydrazine is capable of absorbing the product of the reaction as quickly as light affects the image, it should be possible to prolong this correct period of exposure by giving a longer exposure in the sector apparatus.

I therefore increased the exposure to 2560 candle meter seconds, and although the whole of the steps were extremely dense, the ratio was still correct. I then increased the exposure to 5120 candle meter seconds, with the same result. As the exposure was so long for the next experiment, I substituted an arc lamp for the candle unit (Wildermann Standard Water Cooled Acetylene Flame, calibrated to a standard candle). The use of the arc lamp naturally introduced difficulties, and the resulting negatives were very difficult to measure. However, so far as I carried exposure, I never arrived at that period which Hurter and Driffield called the period of decreasing rise or overexposure. The difficulties of measuring extremely dense negatives, and the fact that the best method of developing had not at that time been worked out, led me to abandon the sector machine for the moment in order to get quickly some data as to the period at which reversal took place (if at all) with the hydrazine plate. I therefore photographed an incandescent gas mantle; but failed to get a satisfactory image on account of the movement of the mantle, I then substituted an ordinary electric incandescent carbon filament lamp. The lamp was set up in front of the camera, and given an exposure of ten minutes with stop *f*/22. Two plates were used, made from the same

batch of emulsion, one of which had received the addition of hydrazine, while the other had not. With the untreated emulsion the filament was entirely reversed, whereas in the case of the hydrazine plate (the conditions of exposure and development being identical) the filament shows no sign of reversal.

For my next experiment I took an ordinary hand-feed electric arc lamp, taking 12 ampères at 45 volts, and photographed it under the same conditions. In this instance I made a first exposure, with an untreated plate, of four seconds; this gave no reversal. I then gave eight seconds and secured reversal. For the actual comparative tests I gave both the untreated and the treated plate 120 seconds exposure. The untreated plate is strongly reversed, while the plate containing hydrazine shows no sign of reversal.

The next two slides are from two negatives taken by Mr. Caldwell in Scotland. The sun forms the principal object in the picture, and although sufficient exposure has been given to bring out the detail in the near foreground, there is no sign of reversal of the sun's disk. The importance of a plate showing no reversal when photographing the sun for solar physics work will, I think, be fully appreciated by every worker in this important branch.

The mere fact that with the hydrazine plate we are able to represent correctly such an extraordinary range of light intensities places a new power in the hands of the photographer. But there are a great many other interesting facts about the hydrazine emulsion.

If it is true that the halogen set free by the action of light on a silver bromide film be effectually absorbed by hydrazine, it should be possible to print out an image by the direct action of light upon the plate, and experiment proves this to be true. A hydrazine plate may be exposed in the camera and developed; or the same plate may be placed in contact with a negative and printed out in daylight. The resulting image is a rich warm brown, the color or tone of the finished transparency depending to some extent upon the strength of the fixing bath.

I am able to show you a few lantern slides from negatives printed out in this manner in daylight, and simply fixed in a bath of 3 ounces of hyposulphite of soda to 20 ounces of water. The quality of the image and its color is very similar to that of the very best collodion emulsion lantern slides, a rich warm brown.

The fact that the hydrazine emulsion may be exposed for a very short time and developed, or the image printed right out by prolonged action of light, has a practical bearing on the manufacture of printing papers.

A paper prepared with pure bromide or chloride emulsion with hydrazine may be used as an ordinary bromide paper for a short exposure in an enlarging lantern, and subsequent development; or it may be used in place of a gaslight paper by exposing for a sufficient time to give a faint visible image, and subsequently developing up to full strength; or it may be printed out by direct exposure to the light to the full depth, and merely fixed.

Another important application for the use of hydrazine emulsion has been found in connection with the production of positives upon celluloid. It is well known that the ordinary P. O. P. emulsion containing free silver cannot be used upon celluloid, but the hydrazine emulsion on celluloid forms an ideal printing surface; some of the portraits shown will give you an idea of the very beautiful results to be obtained upon this material.

# CARBON PRINTING

BY A. C. BRAHAM, F.R.P.S.

A PERUSAL of the advertisements in the photographic newspapers gives cause for satisfaction and congratulation to anyone who admires or practises carbon printing.

It will be observed that practically all the makers of printing papers describe their products as giving "carbon" effect, "carbon" surface, vigorous "carbon," soft "carbon," "carbona," and so on to the end of the chapter. They see and appreciate the supreme excellence of true carbon and endeavor to secure similar results. Truly, one may say imitation is the sincerest form of flattery.

The implied suggestion is, of course, that true carbon is a difficult process not within the scope of the occasional worker or amateur, and demanding exceptional skill to work successfully. That I believe is a libel on the capacity of all serious workers; for the necessary manipulations are simple, and give but few opportunities for error. The printing is about twice as quick as with P. O. P., and all troubles of toning and fixing are eliminated, the particular color of the tissue deciding the tone of the print independently of manipulation.

Chemicals have no part in the development of carbon prints, the only materials used (if such they may be called) being cold and hot water.

After development is complete an alum bath is used to get rid of any trace of the bichromate sensitizer left in the picture.

Carbon materials of reliable quality are supplied by most photographic dealers of repute.

The chief stumbling block to the extended use of carbon printing is that the tissue must be sensitized by the user. This, in the case of sensitizing with an aqueous solution of bichromate, requires four or five hours for drying, and a room temporarily devoted to that purpose. The introduction by the Autotype Company of a spirit sensitizer overcomes the inconvenience in respect to the long period of drying, in that the tissue can be sensitized, dried, and ready for printing within a quarter of an hour of the commencement of operations.

For those who wish to keep sensitive tissue for long periods—extending to months a useful and adequate appliance is provided in the form of a storage box, containing an inner spring appliance to keep the tissue flat, and a receptacle for pellets of asbestos impregnated with calcium chloride. Over this the air must pass, and is desiccated before reaching the tissue which is thus protected from the action of moisture—the one condition that is unfavorable to the preservation of the solubility of carbon tissue.

The advantages of carbon printing are so great and the difficulties so few, that its use is bound to continually extend.

The range of colors in which tissue is made is so wide that the most fastidious taste or exacting requirements may readily be met; in fact, the manufacturers of carbon tissue are so lavish in the variety of colors they supply that it is frequently a case of "embarras de choix" in deciding what color is most suitable for the subject in hand.

Then, after the choice of tissue is decided, comes the question on which

transfer paper the picture shall be developed. Here again a great variety is provided, both as regards texture and tone. Papers with a rough texture are suited for bold masses of shadow where detail is subordinated to effect.

The matt fine grain papers occupy an intermediate position between the rough papers, and an extensive variety of smooth surface papers particularly adapted for rendering fine detail.

All these textures of paper may be obtained in a variety of tones, from pure white through cream to buff, and in addition red and yellow papers may be used for firelight effects.

Each worker desires rightly to be a law unto himself, but my own preferences (or prejudices, if the reader chooses so to regard them) lead me to think that should the subject represented be a Cathedral interior, various shades of black may successfully be employed; "Brown Black" or "Warm Black" developed on slightly toned transfer paper giving a charming rendering of stonework. Should the choir, or details of stalls or other woodwork be represented, various browns, such as "Cool Brown" or "Sepia," are more usually selected.

Landscapes may be printed in blacks, browns, and greens, of which latter color several different tones are manufactured. For those fortunately enough situated to be able to take snow scenes, "Engraving Black" (printed lightly) offers a means of rendering the range of gradation in snow, between a sun-lit patch and the shadows in a drift not otherwise to be obtained.

For sea-scapes, snap shots of yachts, studies of breaking waves, the various greens and blues ranging from "Italian Green" to "Turquoise Blue" will give a choice of colors wide enough to satisfy the most exacting taste.

In portraiture, so-called "photographic tones" are readily obtained by using "Portrait Brown," "Ruby Brown," or "Warm Sepia." Many professional photographers not bound by convention employ with great success, especially for portraits of ladies and children, "Red Chalk," "Terra Cotta," and occasionally even "Bright Red" or "Carmine."

By the choice of suitable transfer papers endless modifications of tone and texture may be obtained, ranging from the extreme gloss of P. O. P. (should such be desired) to the deep dead matt of a fine mezzotint engraving, and with an imperceptible grain or the roughest texture.

Who that owns photographs of those "Loved long since and lost awhile" has not had occasion to lament the fading of some valued portrait, and, from a merely utilitarian point of view, what folly it is to spend either time or money in working up, either in color or monochrome, on a base which will probably become yellow and fade, destroying the values of light and shade obtained, and making what was a pleasing portrait only grotesque.

For the credit of photography it is to be regretted that the public do not always realize the risky nature of a worked-up silver print, and insist that when they pay for artistic finishing they shall have a reasonable certainty that the result shall be permanent.

This may be secured by employing carbon prints; the best makers of tissue being scrupulously careful to use only permanent pigments in the manufacture of their products, and to use papers that are least liable to change tone with age, for all papers, even the best, are subject to a slight but negligible change of tone.

The choice of a process is often decided by the question of cost.

although economy should be rather a wise expenditure of money than merely a question of cheapness. In this respect, carbon is about on a par with silver printing, because, although the cost of tissue and transfer may be slightly above that of silver paper, there is no further incidental expense for toning solutions to be considered.

Space forbids my entering in detail on methods of manipulation, but I strongly advise beginners to follow *exactly* the instructions issued by the makers of carbon tissues, and not to deviate from them until they have succeeded in producing good results; for, although all makers of photographic materials are human and therefore fallible, they may be trusted in their own interest to issue instructions which, if followed, leave the least liability to failures.

## TONE VALUES IN PORTRAITURE

BY HAROLD CAZNEAUX

ONE of the greatest triumphs of photographic art just at present is the correct rendering of flesh tones, etc., in protraiture. The photographer who exhibits prints with pose and expression reflecting the sitter's personality and temperament, and at the same time suggesting the tonal values of real flesh, not only does justice to himself and his sitter, but also advances the art of portraiture by photography. The old school of white faces and hard range of tone in draperies and backgrounds is surely passing away. However, it seems a pity that many photographers who have advanced their work by portraying excellent character, fail as yet when their tonal qualities are questioned. In these cases the work is certainly not complete; and to give false tone and harmony, we do the photographic art, ourselves, and the sitter discredit.

The subject is worth plenty of study. Many will say, But how? My advice to those is in the word "Observation." Cultivate it, and take its meaning to heart.

Make a start by examining paintings by such a master of tone as Rembrandt. To those who have not the opportunity of seeing the actual paintings, resource to good reproductions in black and white will be just as good a lesson and in some ways better, as our work in photography is invariably in monochrome, and it is by good "tone" work that we suggest color.

Now, notice in Rembrandt's work the subtle range of tone in flesh and draperies; there is an absence of hard whites and blacks. The luminosity of the backgrounds can come in for comment. They are not black, mind you, but dark and full of lights of a luminous character. Our photographic backgrounds, used as they are, are as dead as dead can be. If our flesh tones are to be good, then our backgrounds must also be good as regards being luminous.

A study of the best of the modern portrait painters would also be an advantage—even in reproduction, as very little is lost nowadays in the rendering of correct tone by artist photographers. Sadakichi Hartmann, in one of the *Photo Miniatures* (No. 95), deals effectively with tone rendering in photography. Add it to your library if you have not already got it there. "Let the high lights fall on the face"—this is an old tip that has been followed

carefully by many a photographer, who, as a consequence, naturally makes many mistakes in faulty tone rendering. As regards tone—suppose the sitter wears a white collar or fur, would it be correct to place a higher light value on the face than that reflected by the collar or fur? Certainly not. They would be out of tone, and naturally the artistic side suffers. Such an effect would be, perhaps, striking, but not artistic.

Let the photographer observe, while shaving one morning, the effect of the white lather against the flesh. He may be surprised how much darker the flesh appears to be when contrasted with white. White has the apparent property of making a gray look darker by contrast. Now, if black be added, such as drapery, etc., the white becomes more intense. This also applies to the black. If the white collar, etc., is removed, the black seems less intense, but the flesh tones now appear lighter, but far from white, as has been proved.

How many of us have seen portraits of persons arranged in dark dresses and white faces? A knowledge of correct tone values would have prevented the photographer from passing the work. The so-styled "Rembrandt light" in studios is at its best a streak of light outlining the sitter's profile in relief to the dark shadows of the face and draperies; the whole being generally backed up by a black background. The hair by this method is rendered sometimes as white as the light on the profile. Many are the libels on Rembrandt's lighting effects by operators who do not understand the relative tone values. Rembrandt used the pencil of light; but look at the reserve of power that such a light could give! This is just where the unobservant photographer fails. The strong top light becomes fatal in his hands, with the result that high lights get clogged up in development before sufficient shadow gradation is secured. Many of the most subtle effects are the combinations of tone contrast in dark drapery and flesh. If the lighting is correctly filtered and directed there should be a very beautiful rendering of light and dark grays.

To raise or lower the range of tone in portrait work, one need only manipulate the area of light available. I don't mean alterations of the blinds or screens. They have been arranged to let in the light for a certain direction, but rather by the use of diffusing screens drawn over or away from the light arrangement. Thus a brilliantly lit portrait would show a long range of tone, black and white, which is seldom satisfactory from an artistic viewpoint; while the diffused lighting would give a shorter range of tone. The white objects in the brilliantly lit scheme would now appear gray or softer, and the blacks less intense, but more luminous.

It is this scheme of lighting by "diffusion," adopted by the advanced photographers of artistic portrait work, which has done much to raise to such a high level the standard of photographic portraiture in England, America, Germany, etc. These successful photographers know the value of tone and the light to get it with.

In out-door work in portraiture the two schemes of lighting mentioned above hold with the studio alike, the brilliantly lit work being done during the brighter part of the day, while the diffused or softer light is waited for until after sundown. We have no diffusing arrangements out of doors; however, if one is observant, some beautiful lighting can be got in the open that will give tone harmony equal to any studio.

The high-keyed tone effects are very

beautiful. One will notice that contrast is avoided by the use of a somewhat flat light in conjunction with light grounds. The exposure is also made to tend for a high-keyed effect; or, in other words, a short range of tone in a high key. In these light effects an excellent accent note can be made by the introduction of a dark object, such as a belt, tie, and in a child's portrait by the use of a dark toy, etc. This will be found to be quite the reverse of the light accent in the dark picture; but so far as contrast is concerned they are both equally important.

Let us open up the keyboard of a piano—consider what a range of tone, light and shade, and accent notes is represented there. A musician will select a key, around which he weaves his compositions and tone values. Let it be the same with us photographers; whatever the composition of our pictures, let us see that our tone values are correct and in harmony with the chosen key.—*Australasian Photo-Review.*

## THE NEW HEADQUARTERS OF THE ENGLISH KODAK CO.

THE Kodak Company (English) has now settled down into its new headquarters in Kingsway, London, and we recently had an opportunity of going over the building and noting how very carefully all the requirements of the great business of which it is to form the centre had been anticipated and met; and how the most modern and perfect arrangements and appliances had been provided, so that the work to be done in it should be performed with a maximum of comfort and convenience.

As it is not possible for the great majority of our readers to inspect a building with the output of which they are so familiar, a sketch of what we were shown may be of interest. The building itself occupied something less than a year in erection, the foundations of ferro-concrete being laid last autumn. On these a steel frame superstructure of six floors, excluding the basement, has been put up, the floors being of reinforced concrete, each floor constituting a fire-proof unit.

The main entrance is in Kingsway itself, and on the left of the doorway is a retail shop. The lower part of the building is faced with Norwegian granite, the entrance hall, staircase, and first floor being adorned with marble, with handsome wrought-iron gate and balustrades.

The board room and offices of the management, the counting house, correspondence department, and a fine reception hall occupy the first floor; the second is given up to the dealers' stock, town order, and invoice departments; the third floor, except for the kinematograph projection room, is left for expansion. Above this there is a floor in which are housed the advertising, purchasing, export, technical, and stationery departments, while higher still are the professional showroom and stock departments, the repair shops, together with a kitchen and tea rooms. The roof provides accommodation for the storage of tanks already mentioned, and for the machinery for the lifts.

Of these lifts there are four, two for passengers and two for goods, while communication between the various floors is also provided by means of two staircases on opposite sides of the building, each in a fireproof well. The lavatories, which are excellently equipped, and provided with hot and

cold water, etc., are arranged alongside the staircases. There is also a chute for cases being delivered to the basement, and a dock at which two carts can be simultaneously loaded.

No one can go over this admirably designed and equipped structure without being impressed both by the extent of the business which is carried on in it and by the way in which that business has been systematized. Each department is self-contained, and each has for its immediate neighbors those of the others which with it is most closely connected. Hence running about from floor to floor, inter-departmental correspondence, the transfer of goods, and other movements, in which in badly planned offices and warehouses so much time and labor are wasted, are here reduced to a minimum. The whole building constitutes an elaborate but most efficient machine for carrying on the business of the company. It is the fourth headquarters the Kodak Company has had since it originally opened up in London, each a great advance on its predecessors in every way. It is hard to imagine that in a few years' time this also may be outgrown. Certainly, in one way and another it provides room for very great extensions; but it is never safe to prophesy, and it is unwise to attempt to set limits to an organization which has already greatly exceeded all the most sanguine calculations of those who think they know.

The great building is already a perfect hive of industry. It forms the distributing agency, not only for the factories at Rochester, New York, but also for the immense works at Harrow, which we have recently been over.

The Harrow factory of Kodak, Ltd., is situated at Wealdstone, close to the Harrow Station of the L. and N. W. R., but although we were perfectly familiar with its appearance from the railway, the extent of the works came to us as much of a surprise as their perfection for the purposes for which they were erected. Between eight and nine hundred persons find occupation in the buildings here, and provide a basis for the claim that the Kodak Co. is the largest photographic employer of British labor, quite apart from its distinctively American products.

A detailed description of what we saw in the course of a long, interesting, but distinctly tiring afternoon would occupy far more space than we have available, but a few of the most salient points may be noted. The construction of the newest buildings, reinforced concrete, so designed as to offer no ledges or corners on which it was possible for dust to settle; the heating and ventilation of the rooms, fresh, warmed air being supplied in such quantities that a complete change is made every four minutes; the arrangements by which a complete record is made and kept, enabling the whole history of any particular plate or piece of paper to be instantly forthcoming, if the number on the packet is given; the way in which the raw material is tested and examined, and the close watch that is kept upon its manufacture at every stage—all these things were, in their way, quite as impressive as the mere size and extent of the buildings themselves.

One or two features of the works may, perhaps, be referred to in greater detail. It is obviously one of the highest interests of every manufacturer of a standard article that his goods should have fair play from their user, and in photography one of the most important points to secure such a result is the use of chemicals of standard purity and composition. The buyer of small quantities cannot possibly test every purchase to make sure that it is to specification, even if he were quali-

fied chemist enough to be able to make the test. The newest department at the Kodak works, therefore, is for the supply of tested chemicals, packed so as to reach the user with a certainty that they will be in full working order. Every consignment of chemicals as it comes in is analyzed, and only after it has passed the most stringent tests is it allowed to go on to the grinders and mixers, and ultimately to the packers to be put up in the form in which it goes on to the market. What we saw here was enough to give us the most implicit confidence in any packet containing "Kodak Tested Chemicals."

Another department which attracted our attention was that in which the customers' negatives from the various London shops of the company were developed and printed. Time development on the largest scale was here in full swing, and the strips of negatives after development and fixing were submitted to a careful examination by which the best was made of each incorrectly exposed result, with local or general reduction. The printing was carried out upon Velox, the grade being selected to suit the negative, the illuminant being mercury vapor lamps.

The manufacture of sensitive plates and papers is carried on in a dim, if not a religious, light, which does not allow much to be seen; but an operation which is conducted in daylight, and which is in full swing at Harrow, is the coating of the raw paper with baryta. An extensive plant for this purpose makes all the baryta-coated paper which is used by the company.

We might go on recapitulating in detail the many wonders which Mr. S. V. Haus, the works manager, and his chief assistant, Mr. E. A. Robbins, showed us, but we have reached the limits of our space. Let us sum them up by saying that in equipment and design, as well as in size, the factories impressed us as being unexcelled by any of which we have ever seen or heard. Everything that could be done has been done to insure the economical output of a perfect and uniform product.—*Photography and Focus.*

## TWENTY-FIFTH ANNIVERSARY OF THE C. P. GOERZ OPTICAL COMPANY

In the general development of civilization, with its manifold interests, twenty-five years is merely a day; but in the progress of invention and the industries arising therefrom it is sometimes an age. This thought is appropriate in connection with the twenty-fifth anniversary of a world-famous optical manufacturing firm.

The development of optical apparatus, from the days of the half-corrected window-glass lens to the modern anastigmat, and from the old, ponderous field telescope to the modern binocular, has been no less important, even though less sensational than the sudden advancement in methods of lighting, telegraphy, and transportation. In this remarkable course of invention, the name "Goerz," has become to the scientist, to the army officer, and to the photographer a household word.

The firm of C. P. Goerz was founded in 1886, and two years later it occupied a factory on a small scale in Berlin. The first objectives made by the Company were of the aplanatic type, under the trade name, Lynkeioskop; and the first lens which they put upon the market was the Lynkeioskop

C/2. These lenses were so well received that Mr. Goerz decided early in 1889 to enlarge his factory, and for this purpose he removed to Schoneberg. In the years 1890 and 1891 the plant was still further enlarged, and in addition to photographic lenses the firm undertook the manufacture of Galilean binoculars. In 1892 and 1893, the double anastigmat type of lens was introduced, with the firm of C. P. Goerz taking the lead.

The double anastigmat "Dagor" marked a new epoch in photographic optics, and to the firm of C. P. Goerz belongs the credit of having introduced the first symmetrical lens fully corrected for astigmatism, a lens which holds today a preëminent position as a universal photographic objective. As early as 1894 the Company had made 20,000 lenses; six years later the number was 60,000; in the year 1903, 100,000; and in 1908, 200,000 lenses had been manufactured in the Goerz factories for photographic purposes alone.

In the manufacture of cameras the firm of C. P. Goerz also stands in the front rank, having placed upon the market, in coöperation with the father of instantaneous photography, Mr. Ottomar Anschutz, that classical instrument for instantaneous photography, the Goerz-Anschutz hand camera. Today the same type of camera, vastly improved, is widely sold as the popular Goerz folding hand camera, "Ango," which holds equal rank with the Goerz double anastigmats. As soon as it became evident that these Goerz lenses and cameras were filling a long-felt want there were a number of attempts to imitate the designs, which can be considered the highest endorsement of the merits of these constructions.

But the firm has distinguished itself in other lines besides photography. In 1896 it introduced a new type of field glass, known as the Trieder Binocular. Up to that time two distinct types of field glasses were in general use—the Galilean field and opera glass, with its annoyingly narrow field of view, and the Keppler type, which had a vastly larger field, but on account of its optical construction was long and unwieldly. The Goerz-Trieder binocular combines the compact construction of the one with the wide field and fine optical qualities of the other. The Goerz-Trieder binoculars have been officially adopted by most military establishments, and other instruments of Goerz manufacture meet important requirements in the arts of war.

The Goerz panoramic field glass, for instance, is mounted on the modern guns of the principal armies and navies, and in the newest development in the navy craft, the submarine boat, the Goerz periscope forms a very important part of the efficiency of this wonderful type of fighting ships.

Owing to the greatly increased demand for the products of the firm, it became necessary to commence the construction of a large modern factory, and since 1898 the firm has occupied, at Friedenau, near Berlin, its own factory, having a ground space of 14,000 square meters, of which 5100 is covered with buildings, and employing about 2000 skilled workmen. Branch factories have been established at Winterstein in Thuringen, Vienna, Pressburg, and St. Petersburg.

The products of the C. P. Goerz factory in Berlin were first introduced to the American public during the World's Fair at Chicago, in 1893, and ever since the firm has had offices and salesrooms in New York City. To supply the growing demand of Goerz products in the United States,

Mr. C. P. Goerz decided, in the year 1899, to establish in New York a branch factory, and in 1906 it was deemed advisable to organize an American Company, which is the present C. P. Goerz American Optical Company, at 317 East 34th Street, organized under the laws of the State of New York. Realizing from the first that the best inventive genius may be nullified by the least carelessness in detail of manufacture, the management of the C. P. Goerz American Optical Company has insisted upon and secured the same degree of conscientious skill in its New York factory which has made "Goerz Quality" proverbial throughout the world. The American Company now occupies well-equipped premises in a large manufacturing structure at 317-319 East 34th Street, New York City.

This short sketch will give the reader interested in the development of the photographic industry a general idea of the tremendous development of this well-known optical establishment, and Mr. C. P. Goerz, the founder and present active head, may well look back with pride and satisfaction upon the twenty-five years of his activity and success as a manufacturer of photographic and optical goods of supreme quality.

## PRESS PHOTOGRAPHY

BY THOMAS KITTO

Good press photography is probably one of the few phases of the application of camera and lens in which the supply does not exceed the demand. This is all the more extraordinary in these days of strenuous competition, when it is considered that press photography conducted on a proper and businesslike basis is distinctly remunerative and not so very difficult.

Premising there are thousands of capable photographers, none of whom would be adverse to augmenting their income by regular or intermittent increments in the shape of dollars and cents, it is astonishing how few prints of the right sort are submitted that appeal to the keen perceptiveness of editors ever on the lookout for the latest and best illustrations of current events.

A great number of different photographs are admittedly sent to nearly every one of the great illustrated papers in the course of a few weeks, but the number of these is altogether incompatible with the number of photographers, both amateur and professional, who might, by keeping their eyes open, apply their knowledge to their own pecuniary advantage.

### *Cause of Non-acceptance*

Apart from this, it is undoubtedly the case that many of those photographers who do perceive the opening that presents itself for the disposal of photographs of topical interest, set about the business in such a half-hearted way that when their work has been returned with a polite intimation that "the Editor regrets, etc.," instead of seeing the light of publicity in all the glory of half-tone, no further effort has been made to discover why the pictures were unsuitable. It is usually put down to "bad luck," or narrow-mindedness on the part of the editor.

It cannot possibly, however, be

assumed that the lack of acceptance is due in every case to want of ability on the part of the producers of the prints, but it is conceivable that it is owing to lack of knowledge of what is wanted by the particular publications to which the prints are submitted.

Lucky snapshots certainly score occasionally, and many a plodding photographer who has submitted hundreds of prints to the illustrated press without success gives the game up in disgust, simply because he has not endeavored to put himself in imagination in the editor's place, and considered whether the prints were just the sort required.

From this it will be gleaned that haphazard snap-shotting, where press photography is concerned, is only likely to result in a futile expenditure of material. In this, as in most other branches of applied knowledge and skill where competition enters, the survival of the fittest is the inevitable result.

### *Photography of Passing Events*

It is, therefore, more particularly intended in this short article to deal with photography of passing events with a view to publication in the popular illustrated press, as distinct from pictorial work done for specialized or technical journals.

Whether this is done as an auxiliary branch of work by the professional photographer who is already fully alive to the possibilities of this outlet for his ordinary wares in the shape of portraits of celebrities, etc., or whether it is done by the pseudo-amateur who lays himself out specially for the work, the circumstances are alike for both.

Of course, the occasion frequently arises when a dozen or more photographers seize on the same opportunity or public event to secure records, many of which are promptly forwarded to the same publication. Even here, as it is practically impossible that any two can be quite alike, the photographer with the greatest amount of what may be termed "journalistic forethought" will, in most instances, again score the best photograph from the editor's point of view.

### *A Knowledge of General Photography Necessary*

It is assumed, of course, that the readers of these lines have already a knowledge of the production of a technically good photographic print. It is useless to hope for successful results in any branch of specialized work until the grammar of the subject has been thoroughly mastered. In other words, in such a "hot-foot" subject as press photography, where, in most instances, hand-camera work of the highest exactitude is necessary, every moment is precious; every faculty of the operator must be concentrated on the subject before him, and no time or thought must be wasted on the mechanical details connected with the actual exposure of the plate. These should be accomplished almost instinctively, hence the admonition for a thorough grounding in the "grammar" of photography.

### *Subjects for Press Photographs*

Certain methods and special applications of the knowledge of ordinary photographic work will be found necessary, however, and these will be dealt with later. As regards the subject, it is practically limitless. The cry is frequently heard that "it is all very well to recommend press photography, but what is there to photograph?" The answer to this is: There are subjects on every side dealing with nearly

every phase of life, all of which afford material for "pictorial copy," if it is looked for and treated in the right spirit. The fact that the events are not of general or national importance is of not of so much moment as the skill with which the opportunity is taken advatage of and placed before the editor.

Local papers should be closely studied, and the time and place of forthcoming events marked down for attention. If a crowd is anticipated, arrangements should be to come with the police or others in authority to secure a good position or other advantages. This should be seen to in good time, and no chances taken. After the event the presentation of a few prints will go far to assist matters in the same direction on a future occasion.

The goings and comings of important personages, street scenes, incidents and accidents, local activities and industries, local celebrities, naval and military events, sports, church gatherings, and even pictures of no great topical merit, all have their market if rightly placed and at the proper time.

In any case, it will probably be found most useful and instructive if the various illustrated papers are themselves studied and the class of work contained therein taken as a guide. A few conscientious perusals of the illustrated periodic literature to be found in the reading-room of any free library will probably be more of an education in press photography than many pages of instruction in the best means of getting photographs accepted.

### *Other Material for the Press Photographer*

Quite apart from the passing events of the day that offer an opportunity for a pictorial record in the illustrated press, a wide, and in many cases, unexplored field of activity is presented by the protrayal of the everyday incidents of various industries and avocations. The great variety of crops that recur with unfailing regularity every year are in themselves, if properly treated, a mine of wealth to the live photographer with eyes in his head. Every output of the land in every part of the country and abroad, from the preparation of the soil to the consumption of the finished product, constitutes series of undoubted interest and, in many instances, educational value, which if treated in a popular manner usually meet with ready acceptance, as it is as much the idea of the editors of the illustrated weeklies to publish news and instruction wrapped up in an easily assimilated form as it is the desire of the bulk of the readers to mark, learn, and inwardly digest.

The preparation, too, of nearly every manufactured thing by which we are surrounded, if traced to its source, not only affords a most interesting matter to the average reader, if presented as a series of photographic records, but incidentally trains the mind of the operator in an easy fashion to grasp the right sort of incident to portray and the psychological moment at which to secure it.

### *Making the Most of the Subject*

This power of being able to instinctively grasp the right instant of exposure, when the chief factors in the incident under consideration have assumed their most striking and effective correlation one to the other, no matter whether a yacht race, a street incident, or the reception of the President, is the subject, will come with practice and observation, although it appears to be born in some people.

At all events it will always be found that there is one moment in the course

of every photographable incident when the very best and most illustrative grouping occurs; when everything is at its best to tell the tale under the circumstances. This moment should be watched for, and the photograph then taken.

It is probably inability on the part of many good workers to grasp this that accounts for much of their lack of success as press photographers.

### *Apparatus Necessary*

Having now briefly described the position and extent of press photography, and mentioned such difficulties that are likely to hamper the operator, the apparatus and production of the prints must be considered. The subjects to be photographed and methods of placing the results before the editors of illustrated papers will be dealt with later.

First, regarding the question of large versus small cameras for this kind of work, the consensus of opinion is all in favor of the small camera. Unless special press work is being done to order, such as the photography of buildings or public functions when there is no hurry or fear of competition, the portability of the smaller-sized camera renders it an indispensable adjunct to quick work.

Not only can much more be done with the smaller sizes of hand-cameras, either in a crowd or from any particular coign of vantage; but the facility with which the smaller plates and films can be changed and the ease with which the entire apparatus can be manipulated, in comparison with a large-size outfit, are points distinctly in their favor, to say nothing of the question of expense and subsequent operations in the dark-room.

By large cameras it is understood that cameras taking 10 in by 8 in., 12 in. by 10 in., 15 in. by 12 in., or larger size plates, are meant. As these will very likely necessitate the use of a tripod, their utility is still further curtailed. By smaller sizes, 5 in. by 4 in. and half-plate ($6\frac{1}{2}$ in. by $4\frac{3}{4}$ in.) are more particularly referred to. Given one of these latter with a first-class lens, enlargements up to 15 in. by 12 in. can be easily obtained that compare favorably in every respect with direct prints from negatives that size. The press photographer, therefore, who essays the work with a hand camera larger than half-plate will, in many instances, find himself impeded by its immobility.

### *Best Types of Camera to Use*

A camera of the now popular folding focal-plane type is probably the best, and will fill every requirement for this kind of work. It would be invidious in this article to recommend to the reader any one particular make of camera; but a reference to the advertisement pages of the magazines will disclose a goodly selection of this class of instrument to choose from. In any case, a quickly erected camera of the greatest possible simplicity, and with the fewest complicated movements, will be found to answer best for the work.

Next to the collapsible focal-plane shutter camera, a good box-form camera will be found most efficient. Its bulk is rather a disadvantage if the half-plate size is used, and if it is equipped with a magazine and plate-changing device there is always a doubt as to what is going on inside, although there are many cameras of this type with changing mechanism that can be regarded as quite reliable. If the magazine form is preferred, a good bag-changing system will be found most satisfying, as the plate

is actually handled- through the bag, of course—while changing, and no doubt is felt that the plate is really changed.

### *The Reflex Camera*

The reflex type of camera is also worthy of considerable attention for press photography, and many workers contend that it is the only camera that can be relied upon for the purpose. Its outstanding advantage over other forms of hand-cameras is, of course, the power it confers, to accurately focus the object right up to the instant of exposure.

There are, however, one or two points to consider, which, in the opinion of several successful press photographers, tend to modify this view. It will be found that pictures taken at the "eye level"—that is, the camera held at the height of the eyes of the operator —give not only a much truer rendering of the scene as perceived by the spectator, but when once a direct vision view-finder has been used, and the manipulation of the camera thoroughly mastered, no advantage is found to accrue from holding the camera lower, as is necessary with practically every reflex camera, or camera with a sunk view-finder, and the inability to look the object "straight in the face" will be found a drawback that somewhat negatives the advantages of being able to focus the image on the screen.

### *View Finders*

The direct vision view-finder is made in several patterns, but the principle is the same in each. The form that is most commonly met with, and is, in fact, supplied fitted to every modern camera of the collapsible focal-plane type, is a rectangular plano-concave lens, mounted in a frame, and hinged to a flat plate, at the other extremity of which is a pointer, also hinged. The finder is fixed to the top of the camera, and in use the lens and pointer are erected at right angles to the base-plate and parallel to each other, the camera being aimed at the object to be photographed in the manner of a gun. On the face of the lens two lines are ruled at right angles to and crossing each other in the centre. On holding the camera close up to the face and looking with one eye through the finder, on which will be observed the scene in miniature, the top of the pointer should just cover the point of intersection of the two lines on the glass, and the view bounded by the frame of the finder should coincide with the view given by the lens on the plate.

It will be found that most of the commercial direct vision finders of this type include an angle of view somewhat narrower than that given by the camera lens, *i. e.*, show less of the picture. This, if anything, is rather an advantage, as it allows a slight margin for error. In any case the camera and finder should be brought as close as possible to the face, as it will be soon observed that the further off the finder is from the eye the less it will include of the view.

The best plan, however, is to discard the finder supplied with the camera, as it will be found almost invariably absurdly small, and buy or have made a much larger size, embodying the direct vision principle, but with no glass—simply a stout wire frame with thin wire cross-pieces. This will be hinged to a flat base, as in the other, and with a hinged pointer at the opposite end. The wire frame should be proportionate in size to the plate used and nearly as big. When once the operator has become accustomed to using this finder he is never likely to choose any other form in preference. Not only is the actual object itself

looked at—unreduced by any lens—but the perceptible effort of focussing the eye necessary when using the glass finder, is absent.

### *A Finder "Tip"*

A finder of the well-known "brilliant" form will, however, frequently be found of use. It can be carried separately and fittings added to the camera to receive it when necessary. Its usefulness will be demonstrated when working in a crowd. By inverting the camera, with the finder in position, and holding it at arm's length above the head, a good view of the proceedings can be obtained over the heads of the spectators that otherwise would be impossible. By looking *up* into the finder the inverted picture can be easily seen and the exposure made in the usual way.

Another form of finder that is frequently used, and is akin to the "direct vision," takes the form of what is, in fact, a smaller camera fixed on top of the hand camera. It is simply a small rectangular box, with large single lens at one end and a piece of ground glass of proportionate size to the plate fixed at the focal distance at the other. The glass is shielded by a hood, and the image is seen (at the "eye level") inverted on the small screen.

Continued practice will soon accustom the photographer to correctly aim the camera at the subject with but little reference to the view finder, which in time becomes merely a guide for centring and levelling the camera.

### *Dark Slides*

Dark slides will be found in nearly every instance to amply compensate by their reliability for any slight inconvenience in bulk and time expended in changing. Good double book form slides are hard to beat as plate carriers. Magazines are bulky and heavy to have on the back of the camera during exposure, and they have been known to stick; while, if by any mischance a light leakage occurs, the whole contents is ruined, whereas one or two plates at the most are spoilt if dark slides are used. The slides should be carried either in a separate case or in the camera case, and should be very plainly numbered so that double exposure is not likely to occur. In addition to being numbered on the side, each slide should also have numbers at the end where the pull-out is. Thus, when a series of slides are in their case, end up, any particular number can be seen and withdrawn without difficulty.

To obviate the possibility of exposing the same plate twice one of the many locking devices on the market should be applied to the slides, or the time-honored method of sticking small pieces of gummed stamp paper over the end or across the bottom joint will be found extremely useful. When the shutter of the slide is pulled out the paper is broken, thus showing afterward whether that plate has been exposed or not.

### *Films versus Plates*

If the worker prefers cut films to plates and finds them quick enough for all work, the film pack will be found very reliable. It is also small and light, and is easily adapted. Roll films can be used in a roll holder. The great advantages of films in the way of bulk and weight will decide many in their favor.

It will be found that, notwithstanding weight and bulk, plates will give a higher percentage of good results than films for this class of work. Here again it would be invidious to specify

any particular brand of plate, but there is no doubt that, although some plates are better than others, there are no bad plates on the market today.

Plates of a high speed should be chosen, and if found satisfactory should always be used. This is the only way to get uniformly good results. The thought that the dark slides always contain plates of a known speed and tried quality adds confidence to the operations.

### *The Lens*

The lens is the item in the press photographer's kit that should receive most attention at the outset. A good lens is a *sine qua non* for press photography. The very best lens that can be afforded should be used, and, if possible, one of the modern high-class anastigmats should be obtained. As small plates are used, with a view in many instances to making enlargements, a lens that gives fine definition to the corners of the plate is essential. Unless the photographs are intended to be for artistic purposes the editors of the illustrated papers will not tolerate fuzziness or out of focus representations of "news" items at any price.

The focal length of the lens should always be at least equal to the length of the diagonal of the plate with which it is used—5½ inches for quarter plate, 6½ inches for 4 by 5, and 8½ inches for half-plate, are useful sizes, but if possible the focal length should be longer than this. Shorter focus lenses can of course be used if they cover the plate well; but it stands to reason that, as in many instances it will not be possible to get quite close to the subject, as when working in a crowd, the larger and clearer the main items of interest in the picture appear the more likely they are to receive consideration.

The lens should work at *f*/6, if possible, as occasions often arise when even that aperture is not large enough to give full exposure. Street snapshots on dull days, for instance, or exposures on street scenes late in the afternoon call for very careful adjustment of lens aperture and shutter speed.

### *Shutter Speeds*

The slowest possible speed consistent with the amount of movement of the subject should always be given. This allows, in some cases, for the use of a smaller stop. Many tables have been prepared from time to time showing the slowest speed at which the shutter must be worked to give a sharp image of a moving object, but experience will do much to teach the photographer to rely on his own judgment as to the necessary exposure. The following table, calculated for a 10-inch lens used on a half-plate camera in the writer's possession, will serve as a guide for the *approximate* exposures in seconds for various moving objects likely to be met with in press photography. If lenses of shorter focal length are used longer exposures can be given. With a 5-inch lens on a quarter-plate, for instance, double these exposures could be used with safety:

| Distance of object 15 to 20 paces. | A | B |
|---|---|---|
| Street scenes; people walking slowly | $\frac{1}{20}$ | $\frac{1}{80}$ |
| Street scenes; people walking rapidly | $\frac{1}{40}$ | $\frac{1}{120}$ |
| Vehicles travelling 6 miles per hour | $\frac{1}{60}$ | $\frac{1}{180}$ |
| Vehicles travelling 10 miles per hour | $\frac{1}{90}$ | $\frac{1}{250}$ |
| Cyclists and trotting horses | $\frac{1}{180}$ | $\frac{1}{400}$ |
| Foot races and sports, etc. | $\frac{1}{250}$ | $\frac{1}{700}$ |
| Cycle races, horses galloping, motors, trains, etc. (30 to 40 miles per hour) | $\frac{1}{300}$ | $\frac{1}{1000}$ |
| Yacht races (10 knots per hour) | $\frac{1}{120}$ | $\frac{1}{350}$ |
| Steamships (20 knots per hour) | $\frac{1}{250}$ | $\frac{1}{700}$ |

The exposures in column A are for objects moving directly toward the camera, those in column B when the objects are moving across the field of

view. If the object is half the given distance away, the exposures must be halved; if twice the distance, double the exposures.

*Focussing*

As very few opportunities will arise when focussing on the screen can be resorted to, an efficient focussing scale should form part of the equipment of the camera. This should be very carefully tested indeed for accuracy, and the distance and relative size of the person or object focussed during the test should be carefully noted and recalled to the mind's eye whenever occasion demands. This training of the eye to estimate distances cannot be too strongly insisted on, and not only the idea of correct distance ought to be grasped, but the ultimate size that a given object at that distance will be in the negative should also be learned. The size of a person as seen in the view finder is a good guide for this; but occasionally time permits of focussing on the screen a given spot likely to be occupied or crossed by the person or other objective of the snapshot.

(To be continued.)

## PROFESSIONAL PHOTOGRAPHERS' CLUB OF NEW YORK

A MOST interesting and enjoyable meeting of this enterprising club was held at the clubrooms on the evening of November 21. The feature of the evening was the competition for four silver cups offered by Mr. Fred Becker, of the Eastman Kodak Company, for as many different classes. The conditions called for three prints. The judges, M. Hammer, S. Paley, and J. Feinnberg, made the following awards: First class, silver cup to I. Buxbaum; certificate of merit, W. B. Stage. Second class, silver cup to G. Dobkin; certificate of merit, J. Goodwin. Third class, silver cup to I. Russack: certificate of merit, M. Robbins, Fourth class, silver cup to S. Kaufman, and certificate of merit to P. Gluckmun. According to the judges the exhibits were neither in quality nor quantity up to the standard usually displayed by the club.

The annual election of officers resulted as follows: President, I. Mandelkern; Vice-President, S. Paley; Treasurer, E. F. Foley, Secretary, E. Chait; Directors, W. B. Stage, F. C. Becker, I. Buxbaum, G. Fisher, and M. Robbins. President-Elect Mandelkern is a highly popular member of the club, and a progressive and prosperous year is looked forward to. Plans for the annual ball to be held at one of New York's leading hotels on February 7 are being pushed ahead and promise well for an interesting event.

## NEW BOOKS

*Photograms of the Year* 1911-12. Typical photographic pictures reproduced and criticised. Edited by H. Snowden Ward, F.R.P.S.; 154 pages, illustrated. Paper covers, $1.25; cloth binding, $1.75. Tennant & Ward, New York, Sales Agents. Here we have gathered together and carefully reproduced some ninety of the more or less outstanding photographs of the year 1911, with critical notes on the present condition of photography in France, Germany, South Africa, and Australia, and a very extended review of the work of the year by Snowden Ward, beginning with the Interna-

tional Exhibition at the Albright Gallery and running through the list of prints illustrating the book. The frontispiece is an original photogravure by J. Craig Annan, of Glasgow, and is in itself a strong argument for a more extended use of this beautiful process by professional photographers. Among so many clever pictures by the best workers it would be invidious on our part to mention any for special praise. The book is a yearly joy to the picture lover, not to be missed by those who know it and highly recommended to those who do not.

## TRADE NOTES

THE SUSSEX PHOTO PAPER CO., of Newton, N. J., has just perfected "Crystalla" slow-speed emulsion developing paper, which can now be obtained in matt, thin and double weight, and semi-matt, double-weight, white and buff rough. This paper is coated on the best imported raw stock and the emulsion is so balanced that full details are brought out in the deepest shadows, while vigorous contrasts are produced. It is a paper that can be used satisfactorily by amateur workers as well as professionals. G. Gennert, 24 East Thirteenth Street, New York, and 212 North State Street, Chicago, is the distributing agent for the Crystalla papers, and will be glad to send full particulars as to price, etc., upon request.

THE C. P. GOERZ AMERICAN OPTICAL CO., 317 E. Thirty-fourth Street, New York, has just produced another interesting and handsome catalogue of the celebrated Goerz lenses. Following the trend in modern catalogue making, this catalogue is not content merely to list the Goerz specialties with prices and particulars, it gives a lot of valuable information on the various properties of a lens, with helpful tables and graphic charts showing angles of view, depth of focus, helps which make for the intelligent use of a lens. There are many illustrations, and they are unusually good. The opening sentence of the booklet is a convincing reason why the prospective lens buyer should consider the Goerz lenses carefully; it reads: "Over 300,000 high-grade Goerz Anastigmat lenses manufactured and marketed by us in the last twenty years is our proud record." Surely a record to boast about. The catalogue also describes an interesting array of Goerz cameras, shutters, and binoculars. A copy can be had by any of our readers on application.

GEO. MURPHY, INC., 57 E. Ninth Street, New York, advises that the *British Journal Almanac* for 1912 is ready for distribution. This standard annual needs little recommendation at our hands, except to mention the fact that the huge edition of 25,000 is liable to sell out quickly and orders should be placed at once to prevent disappointment. The new volume contains an unusually interesting article on the latest methods of lantern-slide making. Indoor and Outdoor At Home Photography is exhaustively treated. The diagrams and illustrations for this article are reproduced as handsome supplement plates. The price of the book is fifty cents in paper, and $1.00 in cloth binding; postage 27 and 37 cents extra, respectively. There is nothing more interesting in the field.

THE BERLIN ANILINE WORKS, of Agfa fame, have mailed to professional photographers throughout the country an orange-colored envelope that arouses considerable curiosity on the part of the recipient, who is instructed to open and develop in the dark-room. We followed these instructions, and, while refraining from giving away the secret, must congratulate GEO. L. BARROWS on his original and unique method of stating a well-known fact. It is a piece of good advertising.

THE DEFENDER PHOTO SUPPLY CO., of Rochester, have made an important addition to their line of well-known photographic specialties, and have placed on the market the Defender Vulcan Film. There is nothing more difficult to make than a satisfactory roll film, and the Defender Company is to be congratulated on the success it has achieved. Users of this film speak very highly of it, and the few rolls we have used ourselves bear out the good things promised for it. The film is non-curling, orthochromatic to a degree, free from mechanical and chemical defects, and gives splendid negatives, with plenty of detail and gradation. The emulsion is fine-grained and evenly coated. Give it a trial at the next opportunity.

THE SOUTHERN SCHOOL OF PHOTOGRAPHY, at McMinnville, Tenn., which is presided over by Mr. W. S. Lively, commonly known as "Daddy Lively," offers a special post-graduate course during the four weeks of February next that should interest professional photographers who are anxious to increase their knowledge of photography. Mr. Lively's methods of teaching are well known throughout the profession, and any photographer who can take this course cannot help but be very materially the gainer for the time so spent. Send for a copy of the professional prospectus for full details.

# WILSON'S PHOTOGRAPHIC MAGAZINE

A MONTHLY MAGAZINE FOR PRACTICAL PHOTOGRAPHERS

Founded in 1864 by EDWARD L. WILSON
MRS. EDWARD L. WILSON, Publisher and Proprietor
L. WINIFRED WILSON AND T. DIXON TENNANT, Editors

EDWARD L. WILSON, 122 EAST TWENTY-FIFTH STREET, NEW YORK
*Entered at New York Post-office as Second-class Matter*

**Yearly subscription in advance, United States and Mexico, $3.00; Canada, $3.25; Foreign Countries, $3.50. Single copies, 25 cents. Subscriptions begin with current issue unless otherwise ordered. Original manuscripts on photographic subjects are solicited, and, if accepted, will be paid for on publication.**

## EDITORS' TABLE.

OUR illustrations this month are of unusual interest. In the six engraved supplements from photographs by Mr. Geo. Steckel, of Los Angeles, we have a series of very beautiful studies in expression. The little subject who proved such an inspiration to Mr. Steckel, and entered so thoroughly into the spirit of picture-making is Margaret Elizabeth Richardson, a granddaughter of the late Edward L. Wilson, and who was born and lives in Los Angeles. Her mother is Mrs. Florence Irving Richardson, and our older subscribers will recall many portraits of her which were reproduced in the magazine some twenty-five years ago. They will also notice the strong resemblance of the grandchild to her grandfather—that brave, cheery smile so characteristic of him. Portraiture can produce nothing more pleasing than the picture of a beautiful and happy child, and Mr. Steckel has achieved its possibilities in these pictures.

---

AT a meeting of the Executive Committee of the P. P. S. of N. Y., held recently in New York City, at which all the executive members were present, namely, Harry A. Bliss, president; E. B. Core, first vice-president; B. J. Falk, second vice-president; A. C. Kalt, secretary, and Floyd E. Baker, treasurer, the dates February 7, 8, and 9 were decided upon for the next annual convention.

The convention will be held in the Park Avenue Hotel, Madison Avenue and Thirty-third Street, New York City, which will also be hotel headquarters. A very interesting program was mapped out, the different features of which will be sent out at as early a date as possible.

---

WE regret to announce the death of Mrs. S. H. Lifshey, the wife of S. H. Lifshey, of Brooklyn, on November 9, from typhoid fever complicated by heart trouble. In the untimely death of Mrs. Lifshey, Mr. Lifshey has the sympathy of the entire profession. An active worker in association affairs, treasurer of the Professional Women Photographers' Society of New York, and a constant attendant at State and National Conventions, Mrs. Lifshey had a wide circle of friends. She had an especially attractive personality, and was liked and respected by all who had the pleasure of meeting her. With a keen perception of the artistic and a love of the beautiful, Mrs. Lifshey had a big share in the rapid rise of Mr. Lifshey in his profession. She was a hard and cheerful worker, and did not neglect her home duties, while being an invaluable help at the studio, and Mr. Lifshey's loss in this respect is a double one. Two boys, nine and twelve years, are left to mourn a devoted mother.

---

AT a recent meeting of the Metropolitan Section of the P. P. S. of N. Y., the following resolution was passed and ordered spread upon the minutes:

WHEREAS, On July 10, 1911, our brother-photographer, George Gardner Rockwood, was taken from us; therefore, be it *Resolved*, That we, the Metropolitan Section of the Professional Photographers' Society of New York, do hereby recognize his long life of professional activity as being of incalculable benefit to the craft. Ever alert to advanced ideas, continually investigating and applying the newer and better processes, a masterly workman whose career is a notable example of breadth and generosity, always ready to extend a helping hand and a cheering word—a stalwart member and friend of this Society, be it further *Resolved*, That these resolutions be spread upon the minutes, and that we now adjourn in respect to his memory.

---

JUST as we go to press we are shocked to hear of the death of H. Snowden Ward after a few hours' illness. As announced above, Mr. Ward was visiting this country as a Special Dickens Fellowship Commissioner, and the news of his untimely death will come as a shock to photographers the world over.

---

THE Philadelphia Entertainment Committee of the Photographers' Association of America will give a reception and dance to the officers of the Association on Wednesday, January 17, 1912, at Musical Fund Hall, Philadelphia.

3 days

Not to be renewed
or transferred

FINE ARTS LIBRARY
3 2044 039 435 300

FA 16.100 (48) 1911

Wilson's Photographic Magazine

| DATE | ISSUED TO |
| --- | --- |
| | Johnson |

FINE ARTS LIBRARY

3 days

Not to be renewed
or transferred

FINE ARTS LIBRARY
3 2044 039 435 3

FA 16.100 (48) 1911

Wilson's Photographic Magazine

| DATE | ISSUED TO |
| --- | --- |
| | Johnson |

LIBRARY